山东恒创环境科技有限公司

Shandong HENGCHUANG Environmental Technology Co., Ltd

山东恒创环境科技有限公司

Shandong HENGCHUANG Environmental Technology Co., Ltd

地 址：山东省德州市德城区新湖街道办事处东方红西路1697号办公楼801室

电 话：0534-2645512　17306379986

邮 箱：sales@hcmswrecycling.com

H&C

专注垃圾处理 节约地球资源

Dedicted to waste treatment, make the earth's resources sustainable.www.hcmswrecycling.com



公司简介
Company profile

山东恒创环境科技有限公司(简称恒创环境)位于具有“九达天衢，神京门户”之城的德州，是一家专注于垃圾分选系统设备及其他环保节能机械装备制造和服务的企业。公司专业从事生活、陈腐、厨余垃圾分选系统设备的设计、研发和制造，并承接陈腐垃圾筛分工程，为客户提供项目解决方案和设备的安装及维护服务。公司在垃圾分选系统设备的制造和服务方面积累了丰富的经验，在国内外有许多成功业绩。

ABOUT US

Shandong HENGCHUANG Environmental Technology Co., Ltd is located in Dezhou, a city with "Jiuda Tianqu and Shenjing portal". It is an enterprise focusing on the manufacturing and service of waste sorting system equipment and other environmental protection and energy-saving machinery and equipment. The company specializes in the design, R & D and manufacturing of domestic, stale and kitchen waste sorting system equipment, undertakes Stale Waste screening engineering, and provides customers with project solutions and equipment installation and maintenance services. The company has accumulated rich experience in the manufacturing and service of waste sorting system equipment, and has many successful achievements at home and abroad.

HC
MSWRECYCLING

企业资质及荣誉
Enterprise qualification and honor















HC
MSWRECYCLING

垃圾处理工艺介绍

Introduction of waste treatment technology

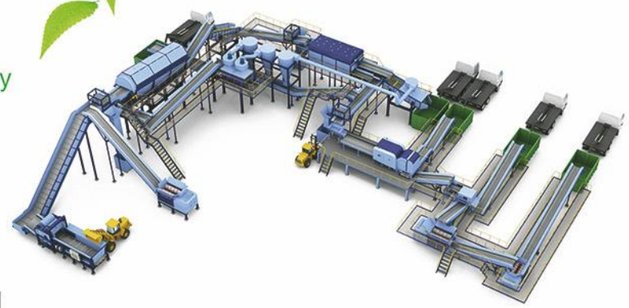

生活垃圾处理工艺

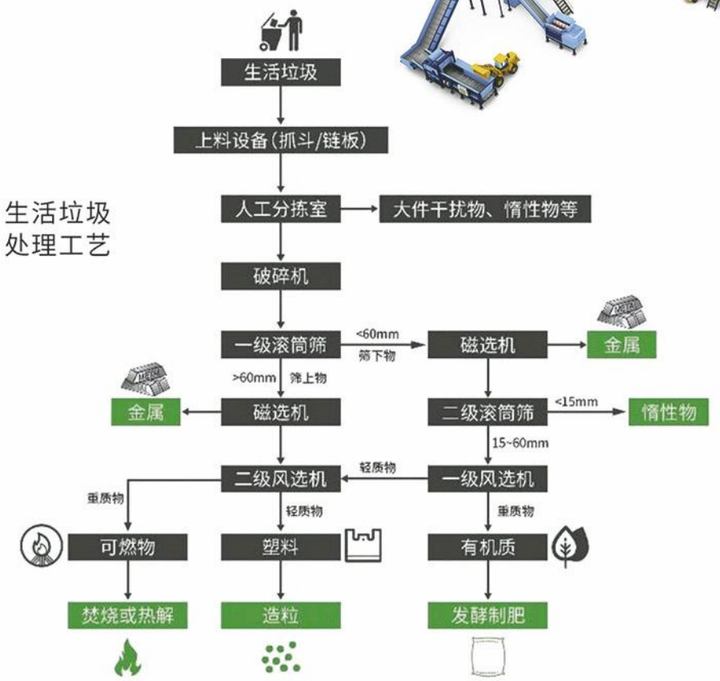

陈腐垃圾处理工艺

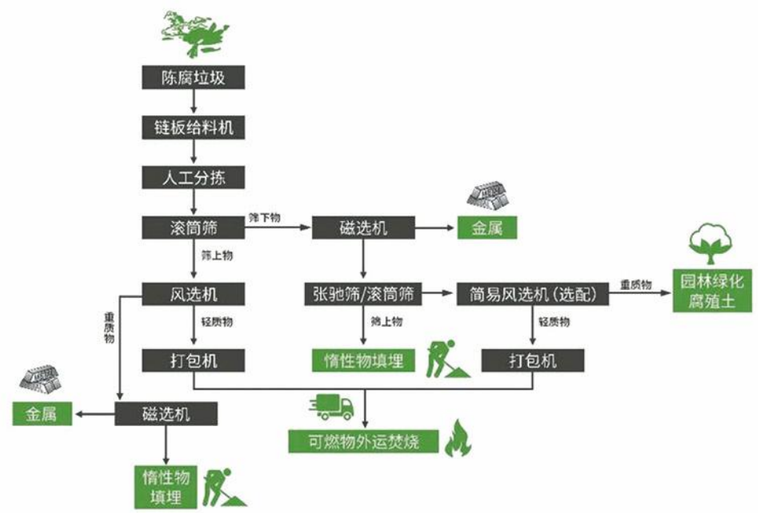

HC
MSWRECYCLING

建筑垃圾处理工艺

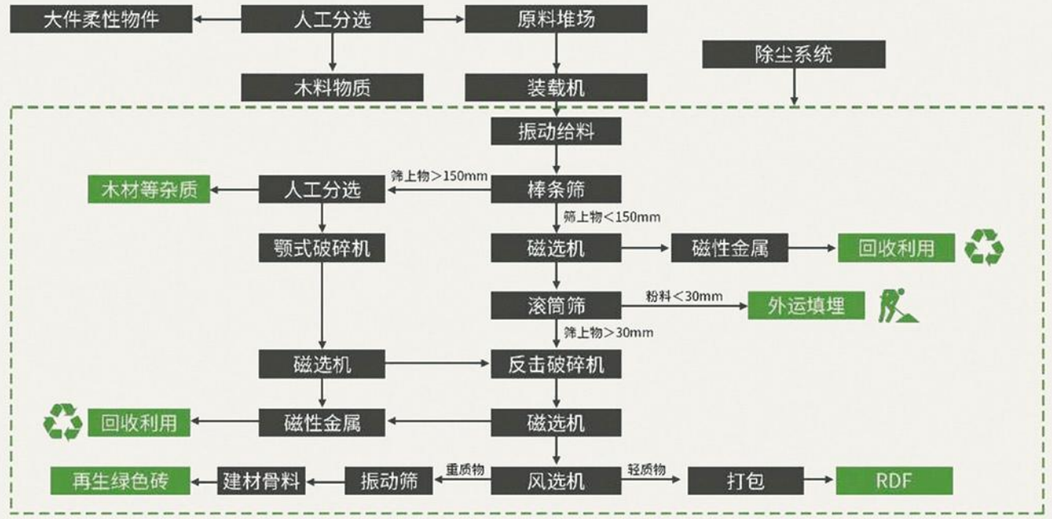

RDF处理工艺

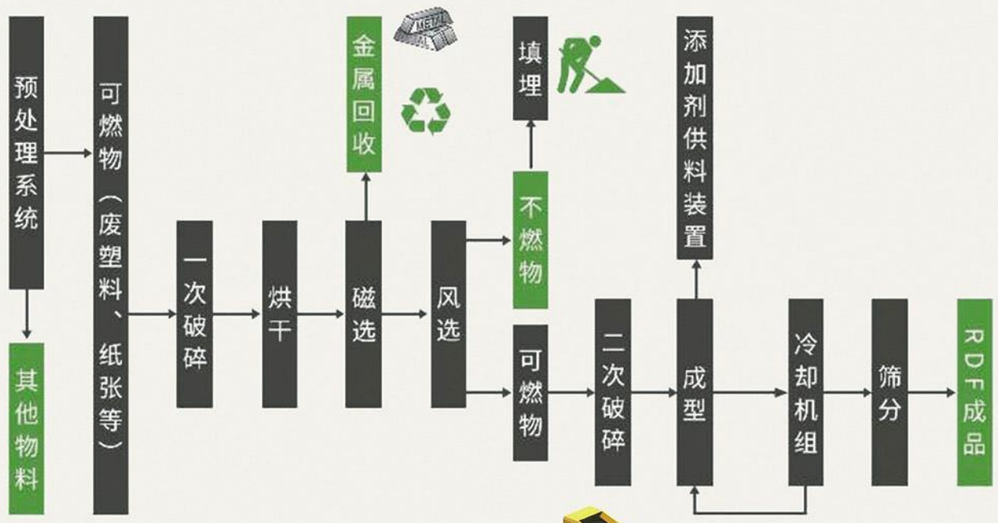



设备介绍
Equipment is introduced

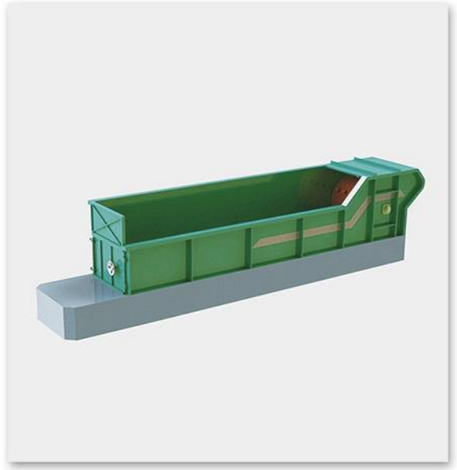



鳞板机（板式给料机）
Plate Feeder

上料机构作为生活垃圾处理线的第一道工序在整条处理线中有着至关重要的作用，它决定了整条处理线的处理速度和处理量。鳞板机机是一种较为常见的承重输送设备，配合头部布料机构可将单位时间内较为集中的垃圾转变成适合后续处理的均量连续的物料形式，提高整条生产线的处理能力。适应于给料储存区的长期工作，鳞板均做防腐蚀处理。

The material feeding device is the first and important unit in MSW processing system, which determines the treatment speed and volume of the whole line.

Plate feeder is a common bearing transport equipment, coordinating with the metering bin feeder, which can distribute the mass waste into uniform and continuous material that is compatible for following treatment, to improve the treatment capacity of the whole line. Adapting to the long time working situation and waste storage environment, anti-corrosion treatment would be performed to the plate feeder.



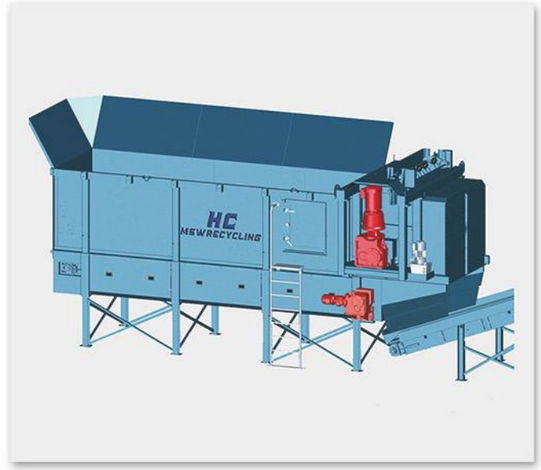

破袋机
Bag Breaker

垃圾袋装化的趋势日益明显。而对于综合垃圾处理线而言，袋装的垃圾将大大影响其处理效率和效果。我公司破袋机可最大限度的破开原生垃圾中的袋装垃圾的包装塑料袋，破袋率达90%以上。

进入破袋机的袋装物料通过旋转刀被带到两组刀之间，双轴刀由电机减速机驱动做旋转运动，由此将袋装垃圾破开，达到垃圾与塑料袋分离的效果。

Bagging waste is increasing. For a comprehensive waste processing line, bagged garbage would greatly decrease the efficiency and effect. The bag breaker can break the maximum plastic bags of bagged primary waste, with rate above 90%.

The plastic bag package would be rotated into the space between two blades, the blades operate and rotate driving by reducer, and then the bag package is broken.



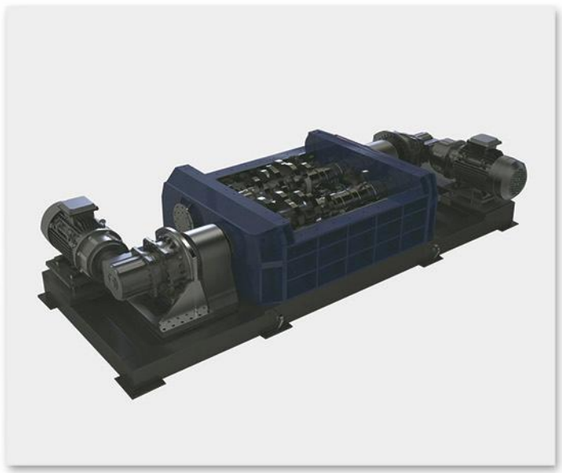

破碎机
Shredder

破碎机是一种用作细碎的机器，一般用于原生垃圾的粗破碎或分选后的可燃物的细破碎。在大件垃圾处理、生活垃圾处理以及RDF系统中经常用到。

Shredder is a kind of machine used for fine crushing, which is generally used for coarse crushing of primary waste or fine crushing of sorted combustibles. It is often used in large waste treatment, domestic waste treatment and RDF system.





滚筒筛
Trommel Screen

滚筒破袋筛分机是主要适用于城市生活垃圾的破袋、筛分和分选的破袋筛分机。破袋、筛分一机完成；转速变频可调，适用陈腐垃圾、新鲜垃圾；专业设计，筛板不堵塞，产量大；多规格，多尺寸，根据用户工艺选择尺寸及孔径。

Trommel screen is a machine used for bag breaking, screening and separation of MSW. Bag breaking and screening in one machine rotation rate is frequency conversion controlled. The machine is designed professionally no-clogging screen mesh which has large output and can be applied to stale refuse or fresh garbage. Various specifications and dimensions are available for users.

风选机
Air Separator

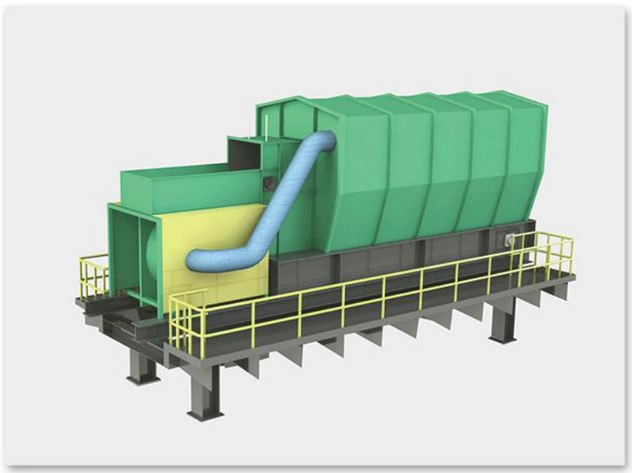

风选机主要用于城市生活垃圾处理系统中，是垃圾处理线的专用设备。对筛分处理筛上物中的塑料及纸张等轻物进行最大化的分选。通过调整送风角度、布料器位置、挡帘位置，物料在最佳的流速和流量下有效分离使该分选系统达到最佳的处理效果，分选效率可达95%以上。通过鼓风系统能够实现轻物料垃圾的分选，且无灰尘产生，具有控制精度高，性能稳定的特点。独特和优化的设计使其满足在恶劣的工况下使用，解决了生活垃圾中塑料、薄膜、纸等大量轻物料进行机械分选的难题。

The air separator is mainly used in MSW system, which is a special equipment in the MSW processing line. This equipment would maximize screen the plastics and paper all these light material from oversized fraction. By adjusting air supply angle, distribution device position, check curtain position, the material separates effectively under a best flowrate, which guarantees the system a best efficiency at more than 95%. During separation of light material by air blow system, no dust appears, the precision is well controlled, and operation is stable. Special and professional design helps the equipment works under severe conditions, and solves the difficult problem for screening light material in the municipal soild waste like plastics, films, paper, etc.



H&C

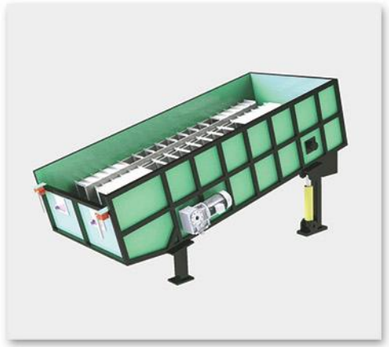



弹跳筛 （弹道筛）
Ballistic Separator

弹跳筛是一种能把3D物、2D物、细物质进行分离的分选设备：

3D物：是指较重的、滚动的材料，如塑料瓶、石头、木材、盒子、罐子等；

2D物：是指较轻的、片状的材料，如塑料膜、包装袋、纸张、纸箱、纤维产品等；

细物质：是指筛下物，如沙石、有机物等；

Ballistic separator is an equipment for separating 3D element, 2D element and fine element.

3D element means heavy and rolling element like plastic bottle, stone, wood, box, can, etc.

2D element means lightweight element and planar element like plastic film, package bag, paper, carton board, fiber product, etc.

Fine element means siftage material like sandstone, organic substance, etc.

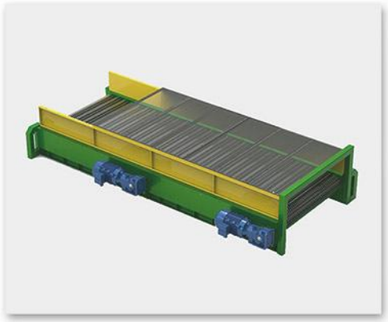



碟形筛（星盘筛）
Disc Screen

通过碟盘之间的开口分离惰性物质和小污染物的系统，碟盘筛由旋转碟盘组成，用于在废物在旋转碟盘上移动时，根据废物的大小和重量，通过碟盘之间的间隙分离废物。常用盘片形式有三角形、六边形。该设备常用于破碎后的垃圾筛分或用于第二道精细筛分。

System for Separating Inerts and Small Contaminants by the Openings between Discs

The disc screen consists of rotating discs for separating wastes through the clearance between the discs depending upon the size and the weight of the waste while the wastes move on the rotation discs.

智能分拣系统
Sorting robot



智能分拣系统由机械手和视觉识别系统组成，具有强大的物体感知和识别能力，能够根据物体大小、形状及颜色进行识别并达到分拣的目的。该系统常用于生活垃圾、建筑垃圾的精细分选，是未来代替人工分选的一种趋势。

The intelligent sorting system is composed of manipulator and visual recognition system. It has strong object perception and recognition ability. It can recognize and achieve the purpose of sorting according to the size, shape and color of objects. The system is often used for fine separation of domestic waste and construction waste, which is a trend to replace manual separation in the future.

RDF成型机
RDF forming machine

该设备用于将可燃物压制成块状燃料棒，燃料棒具有高热值、易燃烧的特点。常用于生活垃圾RDF项目、水泥窑协同处置项目、工业废物处理项目。

The equipment is used to press combustibles into block fuel rods, which have the characteristics of high calorific value and easy combustion. It is commonly used in domestic waste RDF project, cement kiln collaborative disposal project and industrial waste treatment project.

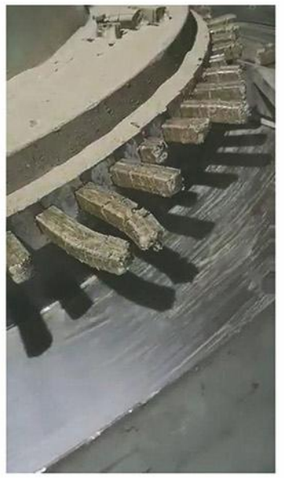







打包机
Baler

液压打包机是一种垃圾处理、废品回收行业处理废纸、塑料、纸箱板压缩打包的专用设备，能够最大限度地实现轻物料垃圾的压缩打包，降低占地空间，减少运输成本。可最大化的降低投资费用和经营费用，并显著的降低废料运输、储存开支，提高企业的营运效果。

Baler is a special equipment to compress and package waste paper, plastics and carton board, which can reduce space and transportation cost. By reducing investment cost, operation cost, transportation cost and storage cost, the operation efficiency is improved.





垃圾压缩设备（垃圾转运设备）
Waste compression equipment

垃圾压缩设备是实现垃圾压缩减容的主要设备之一，也是垃圾转运站的主要处理设备。是一种由液压系统控制的将收集来的垃圾进行压缩，以减少垃圾体积的机械设备。

Waste compression equipment is one of the main equipment to realize waste compression and capacity reduction, and it is also the main treatment equipment of waste transfer station. It is a mechanical equipment controlled by the hydraulic system to compress the collected garbage to reduce the volume of garbage.

磁选机
Magnetic Separator



自卸式电磁除铁器是一种清除散装非磁性物料中铁件的电磁设备，用于从非磁性物料中自动清除0.1~25kg重的磁性物质。自卸皮带上的筋条为橡胶类材质。一般安装于皮带输送机的头部或中部。通电产生强大的磁力将混杂在物料中的铁件吸起后由卸铁皮带抛出，达到自动清除的目的，并有效防止输送机皮带纵向划裂，保护后续设备的正常运行，减少物料中的铁丝、铁罐等带铁料的含量。

Self-unloading magnetic separator is a electromagnetic equipment to clean up iron piece and magnetic substance of range 0.1~25kg in the mass material.The ribs on the self-unloading belt is rubber, which normally located on the head or middle of the belt feeder. The iron piece mixed in the mass material is attracted by magnet force from electric power and threw out from the unloading belt, so that the iron piece and magnetic substance are cleaned up automatically without any longitudinal crack on the belt feeder, which guarantees the normal operation of following equipment by reducing quantity of iron substance in the material.

输送机
Conveyor





输送设备用于垃圾处理分选线中各主要设备之间的传输功能，我公司所研制的输送设备有适合物料输送转运的U型皮带机，也有特别为人工手选平台和狭小输送空间设计的平皮带机及适合物料提升高度的大倾角板式输送机。此外，还可以根据工艺需要设计生产专用的输送设备。

Conveyor is used for transferring material between main equipment in the MSW processing system. The conveyor can be designed with U shape belt machine for material transferring, designed with flat belt machine for manpower sorting platform and narrow space, and designed with large tilt angle plate machine applying to higher space requirement. Other types of conveying device could be designed according to technique requirement.

部分业绩介绍

Part of the presentation



北京陈腐垃圾项目



北京生活垃圾项目



北京建筑垃圾项目



广东陈腐垃圾项目



广东生活垃圾项目



河北再生资源项目



吉林陈腐垃圾项目



山东陈腐垃圾项目



浙江厨余垃圾处理项目



陕西再生资源项目