10G OTU: 10*SFP+

10G OTU service card launched by Sintai Communication Co., Ltd. supports four types of service access with 42M~11.3G rates.，its main function is to finish the 3R regeneration of any 4-channel signals under any protocol within the rate of 1.25 Gbit/s~11.3 Gbit/s to be accessed, and then convert them to optical signals of a standard DWDM wavelength or standard CWDM wavelength, so that the multiplexing unit can conduct WDM for optical signals of different wavelengths and also achieve the inverse process of the above process. It's applicable to the wavelength division transmission solution for any access of services with the rate of 11.3G or below.

Product diagram

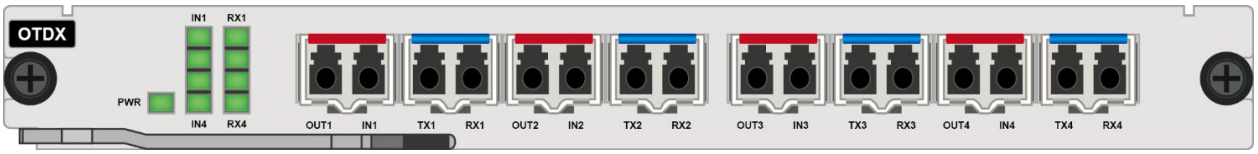

Functional structure

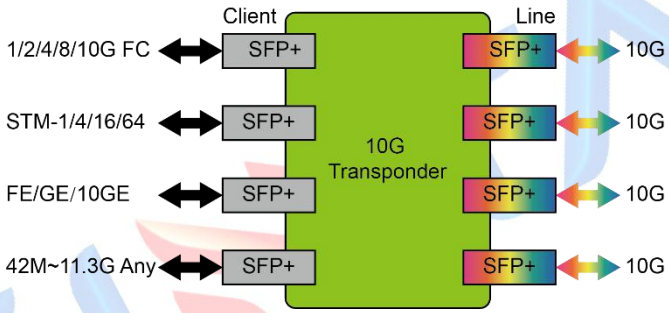

Product specification

Function	Note	
Card type	10G OTU-3R	10G OTU-2R
interface	● Client-side interface: 5 SFP+ hot-pluggable, compatible with SFP ● WDM-side interface: 5 SFP+ hot-pluggable, compatible with SFP	
Line mode	Supports transparent transmission of any type of service in four 42M~11.3G rate ranges, and converts four service optical signals into four WDM standard wavelength optical signals.	
Relay mode	Support 42M~11.3G wavelength electrical relay	
Support service type	● GE, 10GE ● 1/2/4/8/10G FC ● STM-16/64 ● CPRI-2/3/6/7	● FE, GE, 10GE ● 1/2/4/8/10G FC ● STM-1/4/16/64, OTU1/OTU2/OTU2e ● CPRI-1~8, 42M~11.3G Any
WDM technology	● Support CWDM: 18 waves ● Support DWDM: C band 50GHz 96 waves	
Occupied slot number	Support OTNS8600 series chassis, occupy 1 slot	
Network management function	Support real time monitoring of the port working state, including: transmitting optical power and receiving optical power, temperature, etc.	
Power consumption	16W (max, including transceiver)	

MTBF	＞100000 hours

SINTAI

Add: 4F, Scientific Building, No. 63 Punan Road, Huangpu District, Guangzhou, China
Tel: 020-82037001 Fax: 020-82553470 Email: sales@sintai.com.cn