## EXC-B145CBH LED Flood Light




Application Environment:
Indoor
Outdoor

### Description

**EXC-B145CBH full color series** are high power outdoor landscape flood lighting fixture with high strength aluminum alloy housing by EXC-LED. Each lighting fixture is a separate lighting pixel, and each pixel can realize 8bit/16bit grades gray scale changing. Each lighting fixture can be used for accent lighting or flood lighting, such as building facade, bridge, stage, etc.

### Features

- The newest generation technology: DMX512 parallel bus design
- High strength aluminum and low thermal resistance path cooling design
- High reliability modularization design
- Outdoor lighting protection and electrostatic discharge (ESD) protection design
- Load safety design
- Projection distance: 3-15m

| Basic Specifications | |
|---|---|
| Color Range | W, RGB, RGBW |
| Working Voltage | AC220V |
| Max. Power Consumption | 24-36W |
| Light Source | 12PCS High Power LEDs |
| LED chip Brand | Optional(Cree, OSRAM, Lumileds, Epistar, etc...) |
| CRI | 80 |
| Control | DMX512, ON/OFF |
| Source Life | 50,000 h |
| Housing | High Strength Aluminum |
| Cover | Tempered glass |
| Weight | 1.09Kg |
| Dimensions | 144mm x148mm x 65mm (L x W x H, exclude Mounting Bracket) |

| | |
|---|---|
| Installation | Installation with screws or adhesive |
| Working Temperature | -30°C to 50°C |
| Storage Temperature | -40°C to 70°C |
| Protection Rating | IP66 |
| Efficiency flux | ≥60LM/W(White),≥40LM/W(RGBW),≥30LM/W(RGB) |
| Beam Angle | W-3030P7: 8°/10°/15°/20°/30°/45°/60°/80°<br>RGB-3030P7/CREE XP series： 6°/8°/10°/15°/20°/30°/45°/60°/80°<br>3535: 30°/45°/60°/80°<br>5050：17°/20°/30°/45°/60° |

| | |
|---|---|
| Host Controller | EXC-5200 |
| Slave Controller | EXC-2905T1 |
| Signal Cable | EXC-LED outdoor special cable |
| **Light Intensity Distribution** | |
| **5°<br>Light Intensity Chart** | 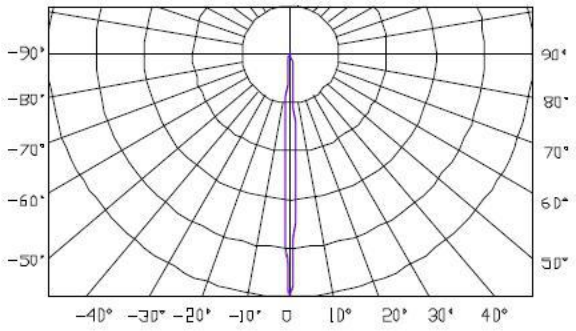 |
| **10°<br>Light Intensity Chart** | 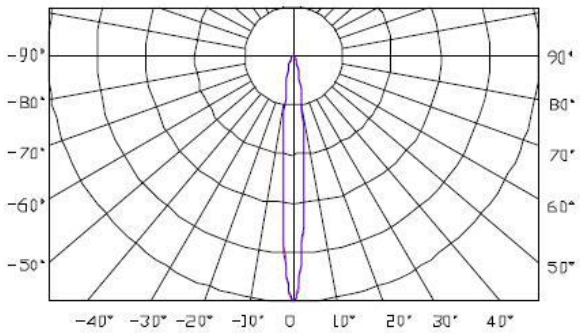 |

| | |
|---|---|
| **80°**<br>**Light Intensity Chart** | 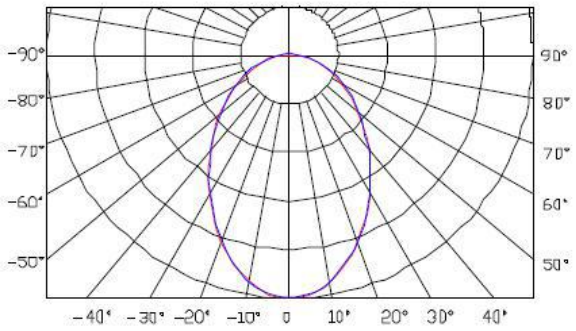 |

## Physical Dimension

Unit：mm

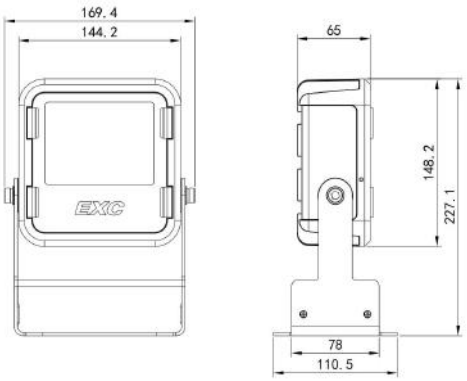


## Installation Diagram

Select M5 screws to fix the lamp mounting bracket to the required position as shown in the figure, lock the mounting seat fixing screw, and lock the connecting screw after adjusting the angle of the lamp. Secure the installation.

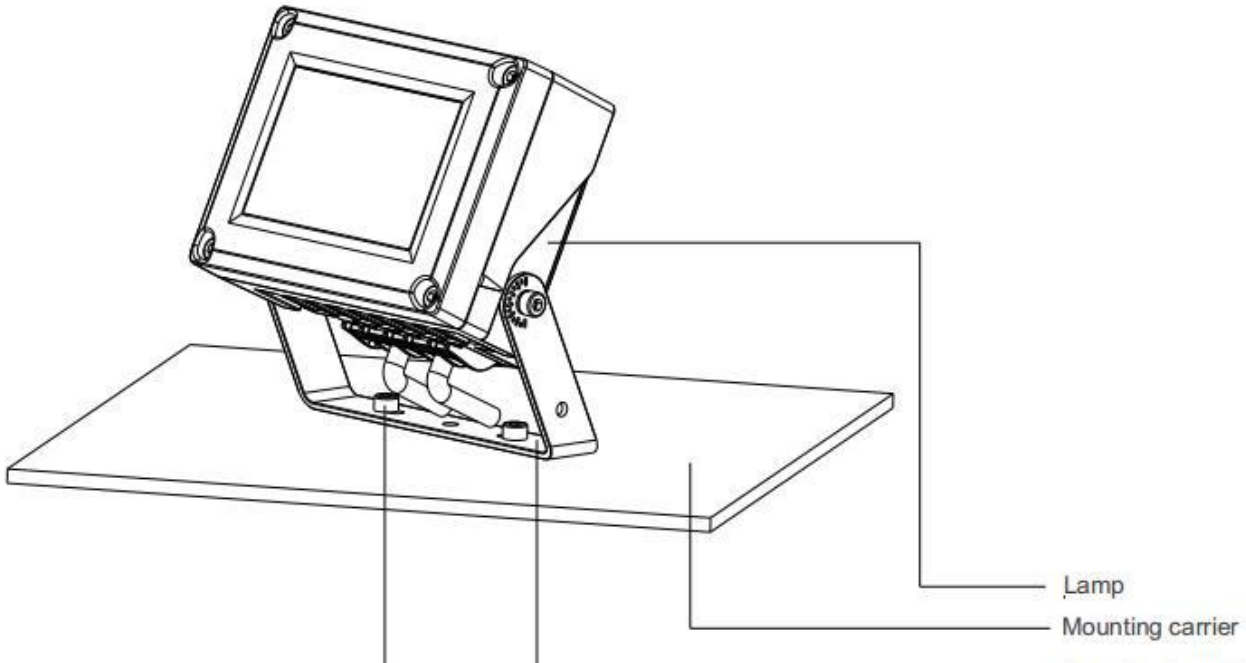

**System connection diagram：**

1、Host controller should connect with slave controller. Working voltage for controllers are AC220V.

2、On-line main controller should connect with slave controller, on-line main controller and sub controller working voltage are AC220V.

3、each sub-controller with 8 ports, with each port 512 pixels, supporting data converter, supports 100 meters ultra-long haul transmission.

4、The CAT-5 e. cable distance should be within 100 meters between host controller and slave controller, between slave controllers and switch, etc.

**Offline Controlling System Diagram**

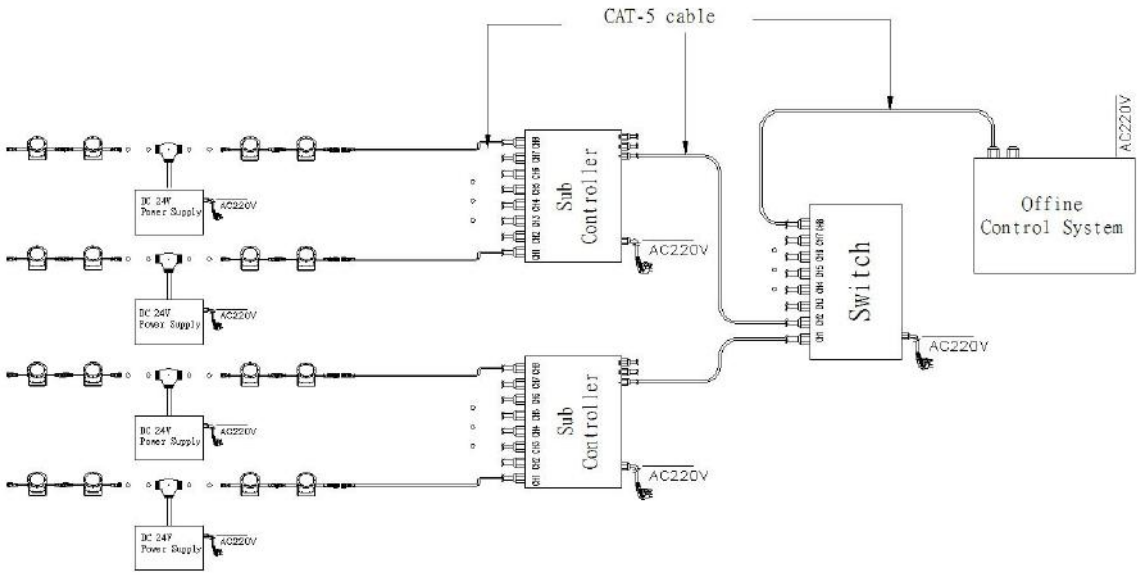


**Online Controlling System Diagram**

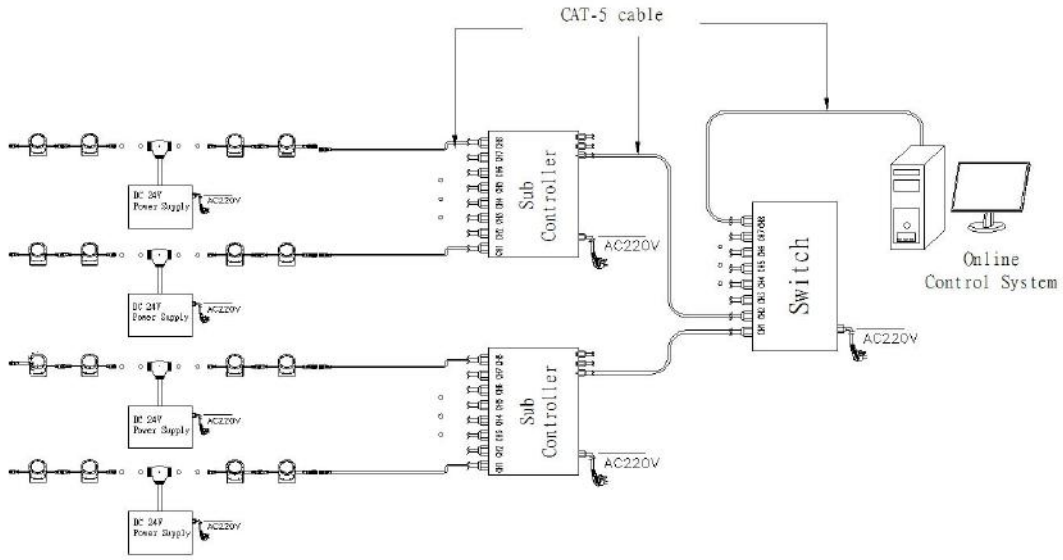

**Accessories :**

**1: Female and Male Connector( Connect to first dot light for signal transmission)**

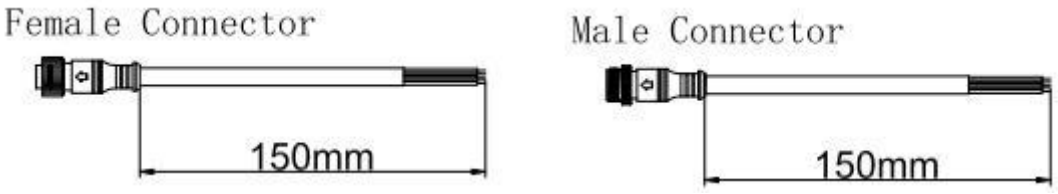


**2: Y Shape Connector(For power Distribution)**

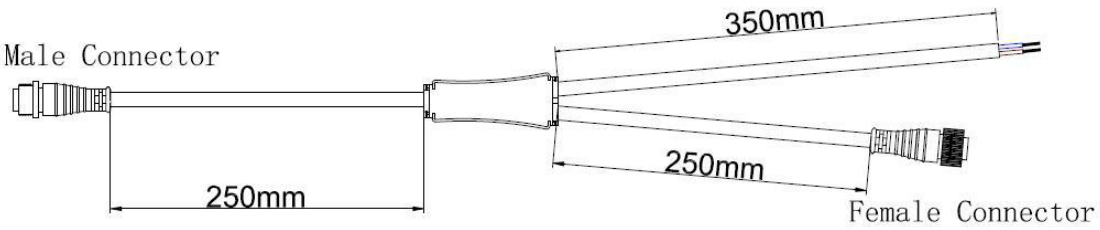


**3: Interconnection Cable(1.3M,3M,5M is standard length)**




**4: End Cap**

