EXC-B175ABH LED Flood Light



Application Environment：
Indoor
Outdoor

Description

EXC-B175ABH series consists of triangular full-color flood lights with high-strength aluminum alloy housing specially designed by EXC for outdoor landscape lighting. It could be used for illumination in specific areas or landscape wash lighting, applicable on building facades, bridges, stages, etc.

Features

- The newest generation technology: DMX512 parallel bus design
- High strength aluminum and low thermal resistance path cooling design
- High reliability modularization design
- Outdoor lighting protection and electrostatic discharge (ESD) protection design
- Load safety design
- Projection distance: 30-100m

Basic Specifications	
Color Range	W(2200K-6500K), R+G+B, R+G+B+W, RGBW
Working Voltage	AC 220V
Max. Power Consumption	100W/120W/150W
Light Source	36/48/72 PCS High Power LEDs
LED chip Brand	Optional(Cree, OSRAM, Lumileds, Epistar, etc...)
CRI	80
Control	DMX512, ON/OFF
Source Life	50,000 h
Housing	High Strength Aluminum
Cover	Tempered glass
Weight	6.68Kg
Dimensions	578mm x 172mm x 173mm (L x W x H, exclude Mounting Bracket)
Installation	Installation with screws
Working Temperature	-40°C to 50°C

Storage Temperature	-40°C to 70°C
Protection Rating	IP66
Efficiency flux	≥60LM/W(White),≥40LM/W(RGBW),≥30LM/W(RGB)
Beam Angle	W-3030P7: 8° /10° /15° /20° /30° /45° /60° /80° RGB-3030P7/CREE XP SERIEL： 6° /8° /10° /15° 20° /30° /45° /60° /80° 3535: 30° /45° /60° /80° 5050：17° /20° /30° /45° /60°

Host Controller	EXC-5200
Slave Controller	EXC-2905T1
Signal Cable	EXC-LED outdoor special cable

Light Intensity Distribution

8° Light Intensity Chart	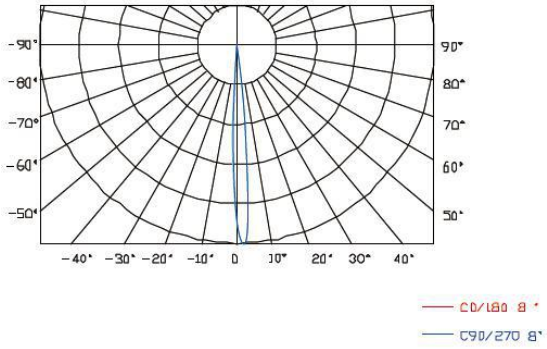
10° Light Intensity Chart	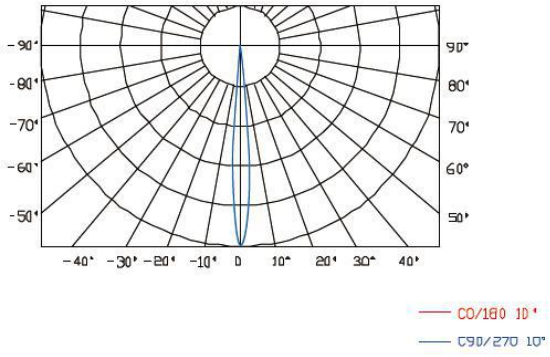
15° Light Intensity Chart	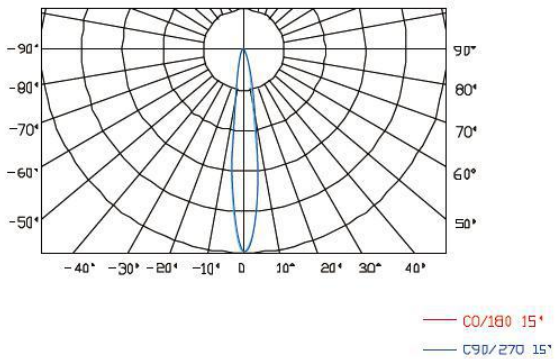

Physical Dimension

Unit, mm

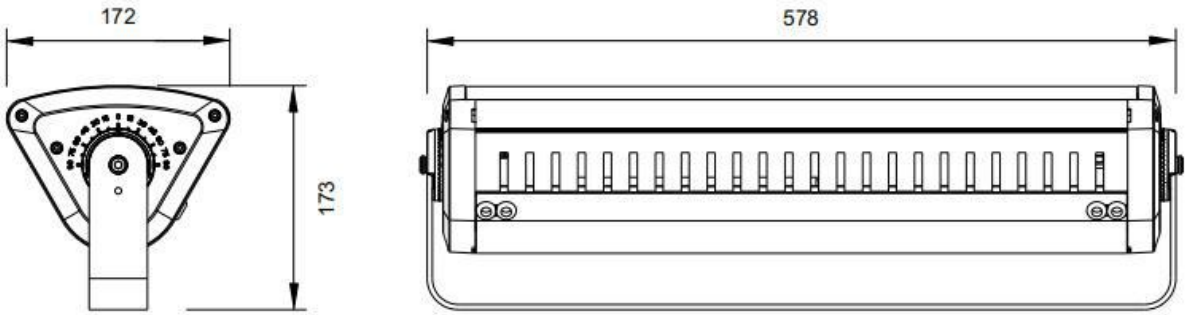

Installation Diagram

1. Select two M10 screws to fix the lamp to the required position as shown in the figure. After the lamp is firmly installed, adjust the angle of the lamp according to actual needs and then lock the connecting screws.

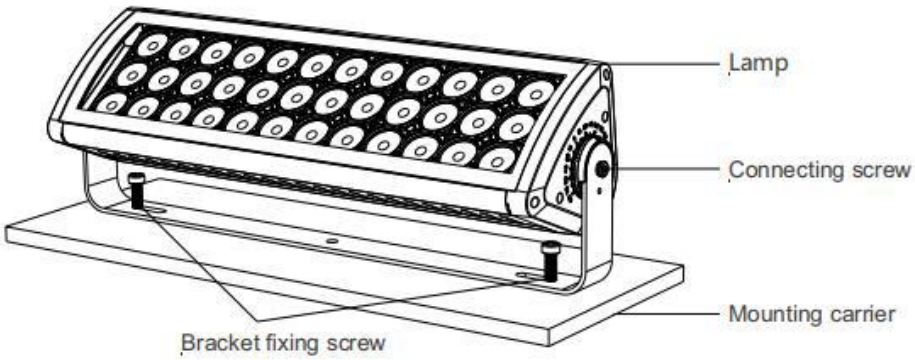

EXC - B175ABH

System connection diagram：

1、Host controller should connect with slave controller. Working voltage for controllers are AC220V.

2、On-line main controller should connect with slave controller, on-line main controller and sub controller working voltage are AC220V.

3、each sub-controller with 8 ports, with each port 512 pixels, supporting data converter, supports 100 meters ultra-long haul transmission.

4、The CAT-5 e. cable distance should be within 100 meters between host controller and slave controller, between slave controllers and switch, etc.

Offline Controlling System Diagram

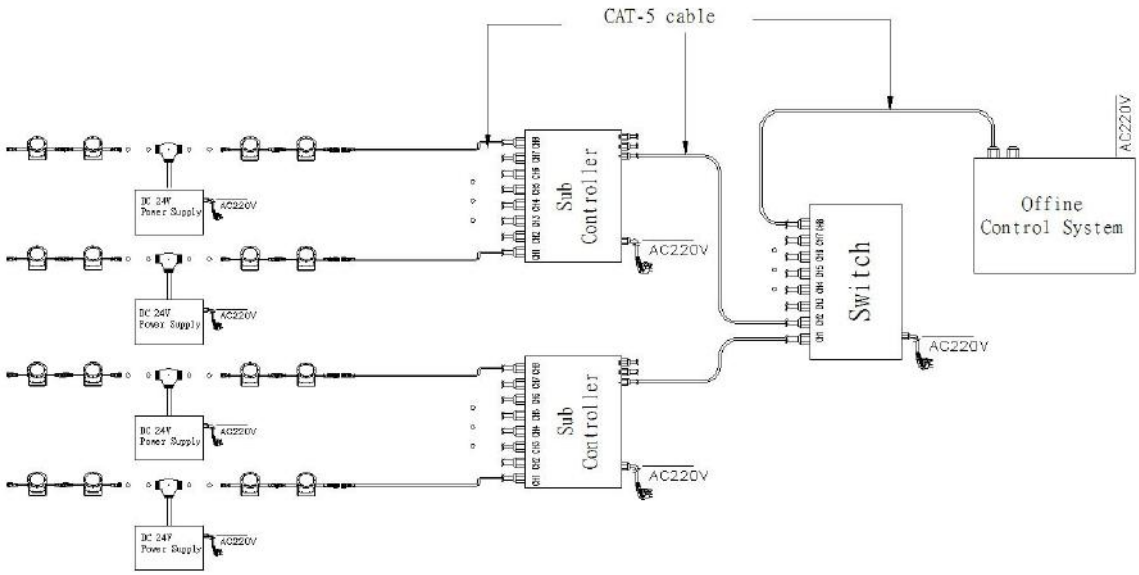

Online Controlling System Diagram

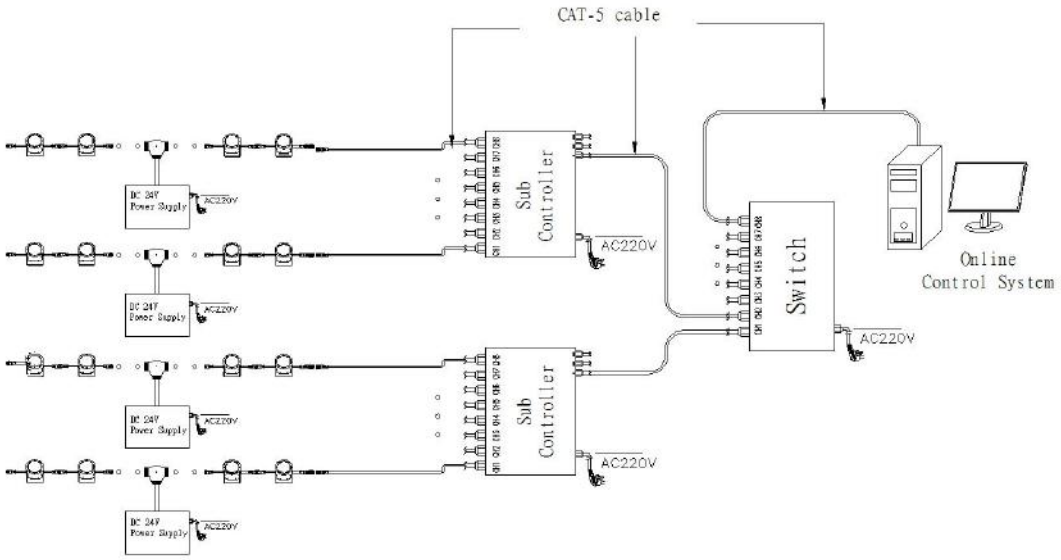

Accessories :

1: Female and Male Connector(Connect to first dot light for signal transmission)

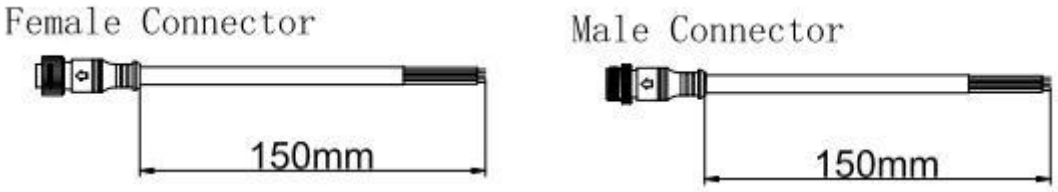

2: Y Shape Connector(For power Distribution)

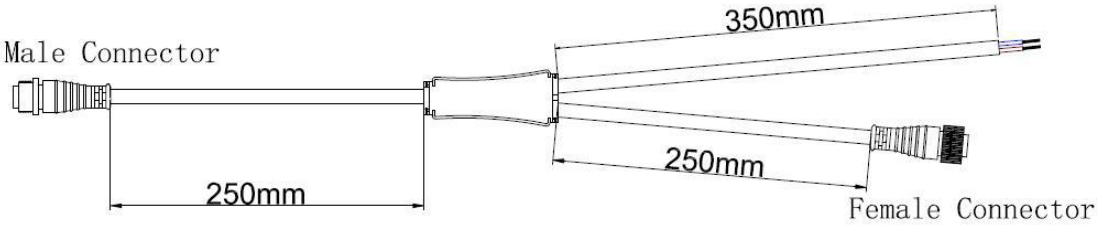

3: Interconnection Cable(1.3M,3M,5M is standard length)



4: End Cap

