## EXC-B400BBH LED Flood Light



Application Environment：
Indoor
Outdoor

### Description

**EXC-B400BBH** full-color series is specially designed for outdoor LED landscape lighting by EXC-LED. It is provide with a high-strength aluminum alloy housing whose arc surface achieves the effect of self-cleaning; it could be used for illumination in specific areas or landscape wash lighting, applicable on building facades, bridges, stages, etc.

### Features

- The newest generation technology: DMX512 parallel bus design
- Patented comb convection heat dissipation design
- High strength aluminum and low thermal resistance path cooling design
- High reliability modularization design
- Outdoor lighting protection and electrostatic discharge (ESD) protection design
- Load safety design
- Projection distance: 50m

| Basic Specifications | |
|---|---|
| Color Range | W(2200K-6500K), R+G+B, R+G+B+W, RGBW |
| Working Voltage | AC220V |
| Max. Power Consumption | 150W/200W/240W/300W |
| Light Source | 36/48/60PCS High Power LEDs |
| LED chip Brand | Optional(Cree, OSRAM, Lumileds, Epistar, etc...) |
| CRI | 80 |
| Control | DMX512, ON/OFF |
| Source Life | 50,000 h |
| Housing | High Strength Aluminum |
| Cover | Tempered glass |
| Weight | 12Kg |
| Dimensions | 400mm x 305mm x 139mm (L x W x H, exclude Mounting Bracket) |

| | |
|---|---|
| Installation | Installation with screws |
| Working Temperature | -40°C to 50°C |
| Storage Temperature | -40°C to 70°C |
| Protection Rating | IP66 |
| Efficiency flux | ≥60LM/W(White),≥40LM/W(RGBW),≥30LM/W(RGB) |
| Beam Angle | W-3030P7: 8° /10° /15° /20° /30° /45° /60° /80°<br>RGB-3030P7/CREE XP系列： 6° /8° /10° /15° 20° /30° /45° /60° /80°<br>3535: 30° /45° /60° /80°<br>5050：17° /20° /30° /45° /60° |

| | |
|---|---|
| Host Controller | EXC-5200 |
| Slave Controller | EXC-2905T1 |
| Signal Cable | EXC-LED outdoor special cable |
| **Light Intensity Distribution** | |
| **8°<br>Light Intensity Chart** | 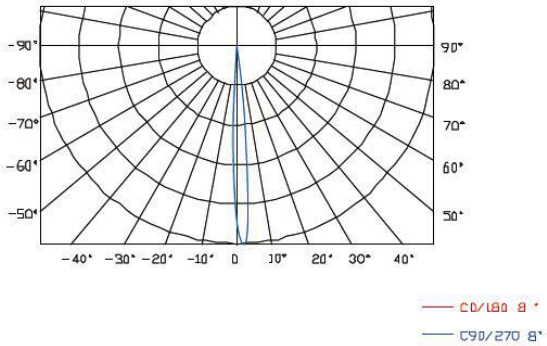 |
| **10°<br>Light Intensity Chart** | 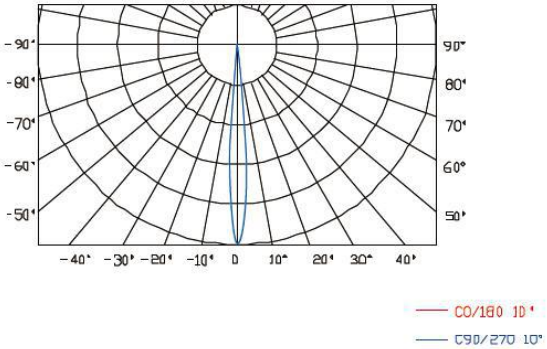 |

**15°**
**Light Intensity Chart**

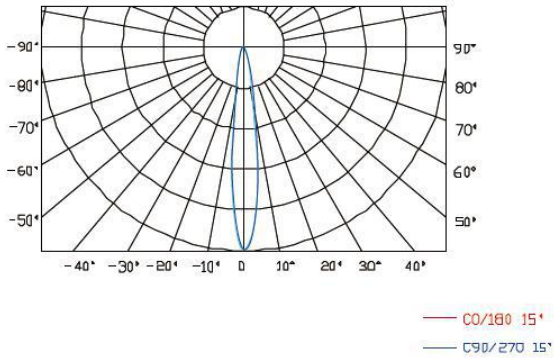


**Physical Dimension**

Unit, mm

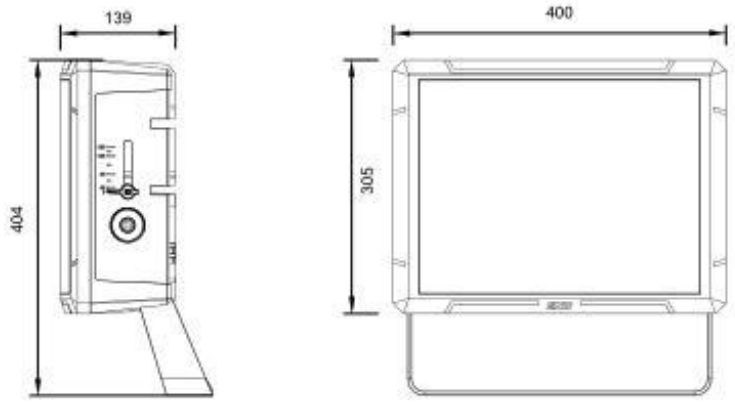


## Installation Diagram

Select two M10 screws to fix the lamp to the required position as shown in the figure. After the lamp is firmly installed, adjust the angle of the lamp according to actual needs and then lock the connecting screws.

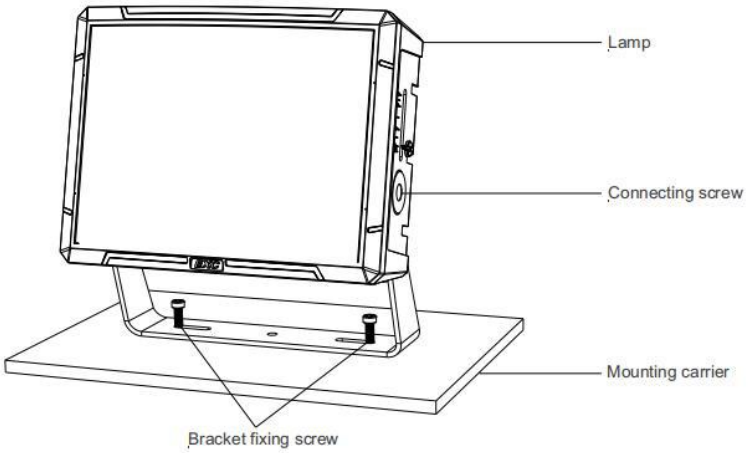

**System connection diagram：**

1、Host controller should connect with slave controller. Working voltage for controllers are AC220V.

2、On-line main controller should connect with slave controller, on-line main controller and sub controller working voltage are AC220V.

3、each sub-controller with 8 ports, with each port 512 pixels, supporting data converter, supports 100 meters ultra-long haul transmission.

4、The CAT-5 e. cable distance should be within 100 meters between host controller and slave controller, between slave controllers and switch, etc.

**Offline Controlling System Diagram**

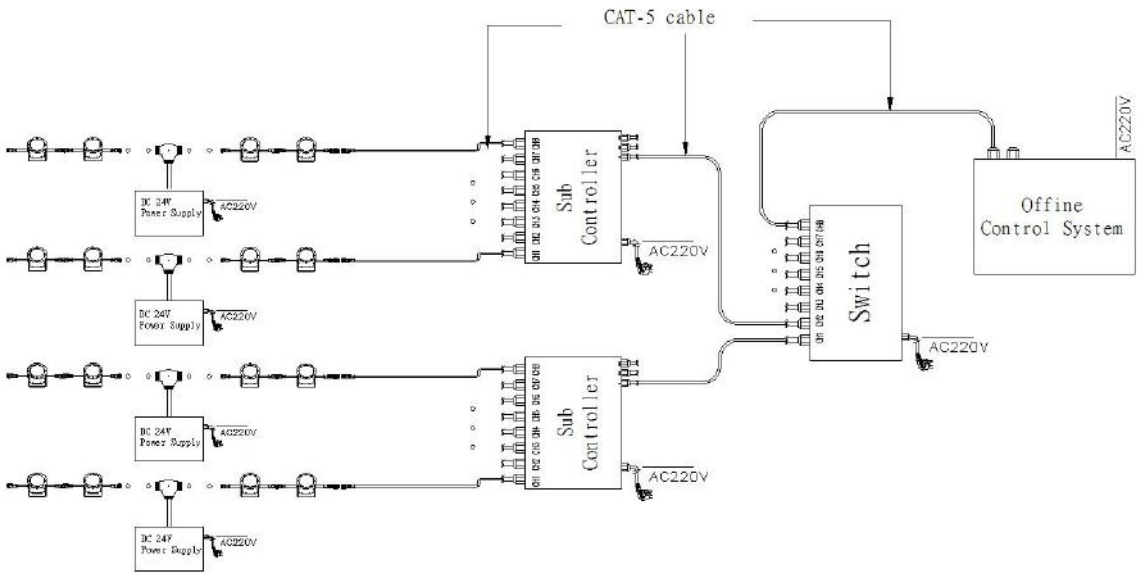


**Online Controlling System Diagram**

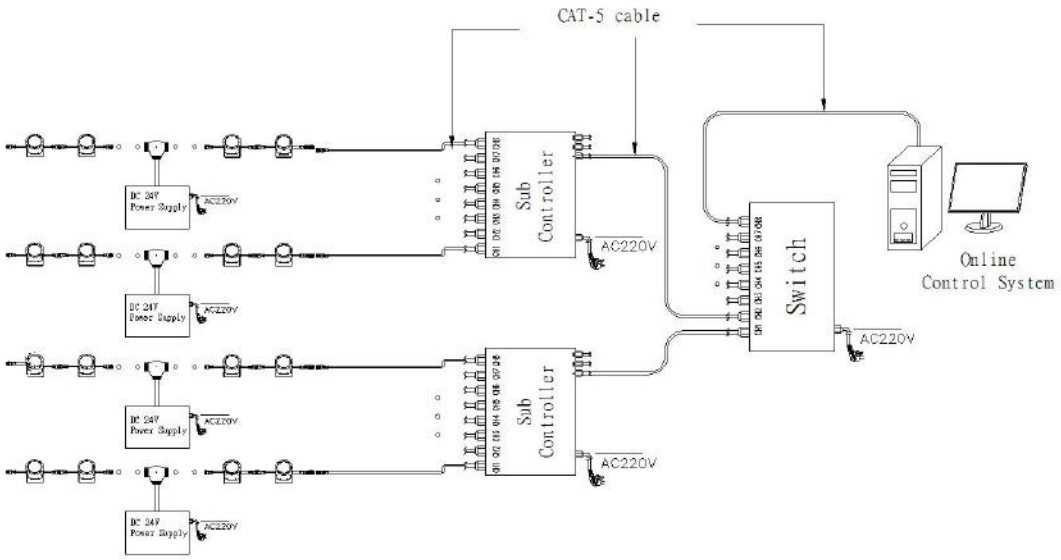

**Accessories :**

**1: Female and Male Connector( Connect to first dot light for signal transmission)**

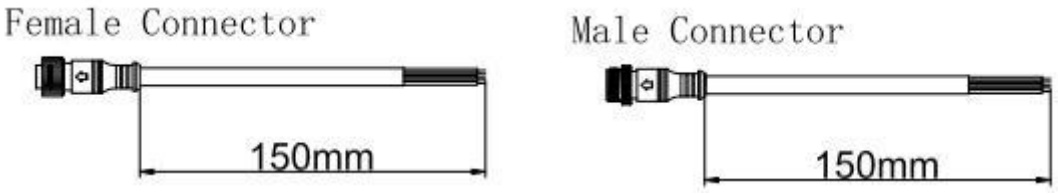


**2: Y Shape Connector(For power Distribution)**

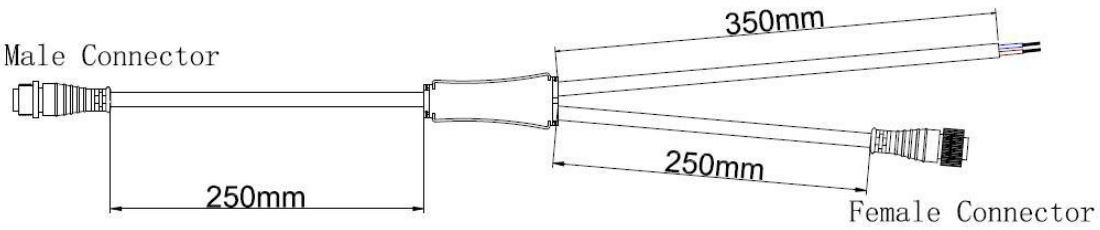


**3: Interconnection Cable(1.3M,3M,5M is standard length)**




**4: End Cap**

