EXC-B62ARL LED Flood Light



Application Environment：
Indoor
Outdoor

Description

EXC-B62ARL series consists of full-color large-power ultra-narrow spotlights with high-strength aluminum-alloy housing specially designed by EXC for outdoor landscape lighting. It is equipped with 3° professional lens. Each light is a separate lighting pixel, and each pixel can realize 65536 grades gray scale changing. It could be used for illumination in specific areas or landscape wash lighting, applicable on building facades, bridges, stages, etc.

Features

- The newest generation technology: DMX512 parallel bus design
- High strength aluminum and low thermal resistance path cooling design
- High reliability modularization design
- Outdoor lighting protection and electrostatic discharge (ESD) protection design
- Load safety design
- Projection distance: 5m

Basic Specifications

Color Range	W
Working Voltage	DC 24V
Max. Power Consumption	3W/6W/9W
Light Source	3PCS High Power LEDs
LED chip Brand	Optional(Cree, OSRAM, Lumileds, Epistar, etc...)
CRI	80
Control	DMX512, ON/OFF
Source Life	50,000 h
Housing	High Strength Aluminum
Cover	Tempered glass
Weight	0.7Kg

Dimensions	64mm x 60mm x 34.5mm (L x W x H, exclude Mounting Bracket)
Installation	Mounting seat
Working Temperature	-30°C to 50°C
Storage Temperature	-40°C to 70°C
Protection Rating	IP66
Efficiency flux	⩾70LM/W(White),⩾45LM/W(RGBW),⩾30LM/W(RGB)
Beam Angle	10°, 15°, 25°and other angles optional

Host Controller	EXC-5200
Slave Controller	EXC-2905T1
Signal Cable	EXC-LED outdoor special cable

Light Intensity Distribution

10°
Light Intensity Chart

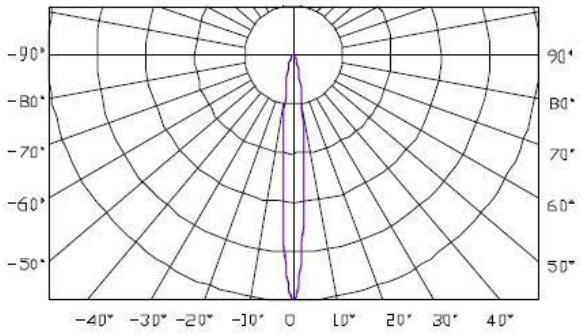

Physical Dimension

Unit：mm

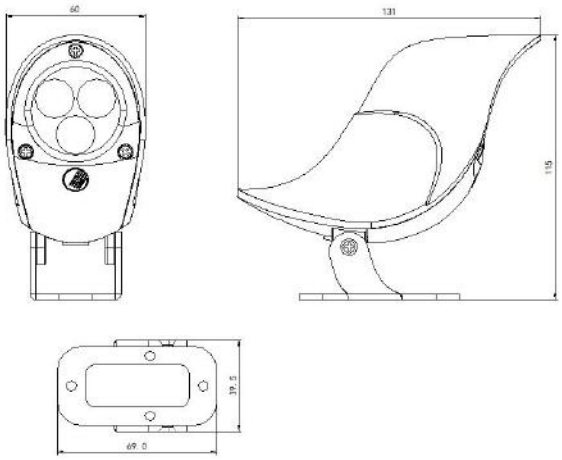

Installation Diagram

Place the lamp on the carrier to be preinstalled on and confirm the lamp spacing requirements. Lock the bracket fixing screws on the carrier as shown in the figure and lock the mounting seat fixing screws. Secure screws and adjust the angle of the lamp.

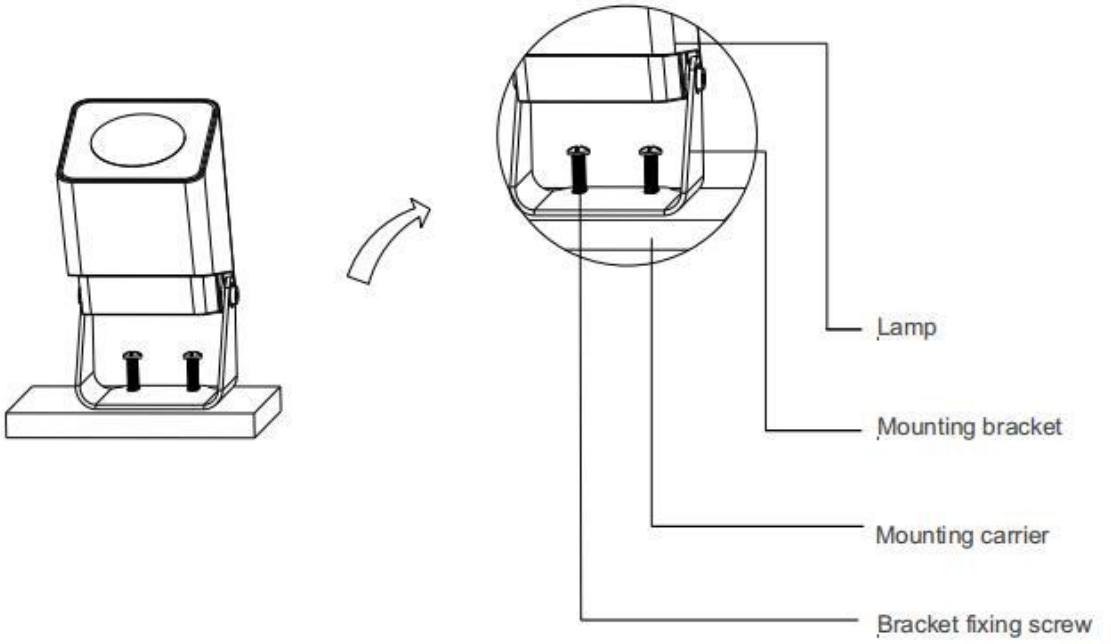

System connection diagram：

1、Host controller should connect with slave controller. Working voltage for controllers are AC220V.

2、On-line main controller should connect with slave controller, on-line main controller and sub controller working voltage are AC220V.

3、each sub-controller with 8 ports, with each port 512 pixels, supporting data converter, supports 100 meters ultra-long haul transmission.

4、The CAT-5 e. cable distance should be within 100 meters between host controller and slave controller, between slave controllers and switch, etc.

Offline Controlling System Diagram

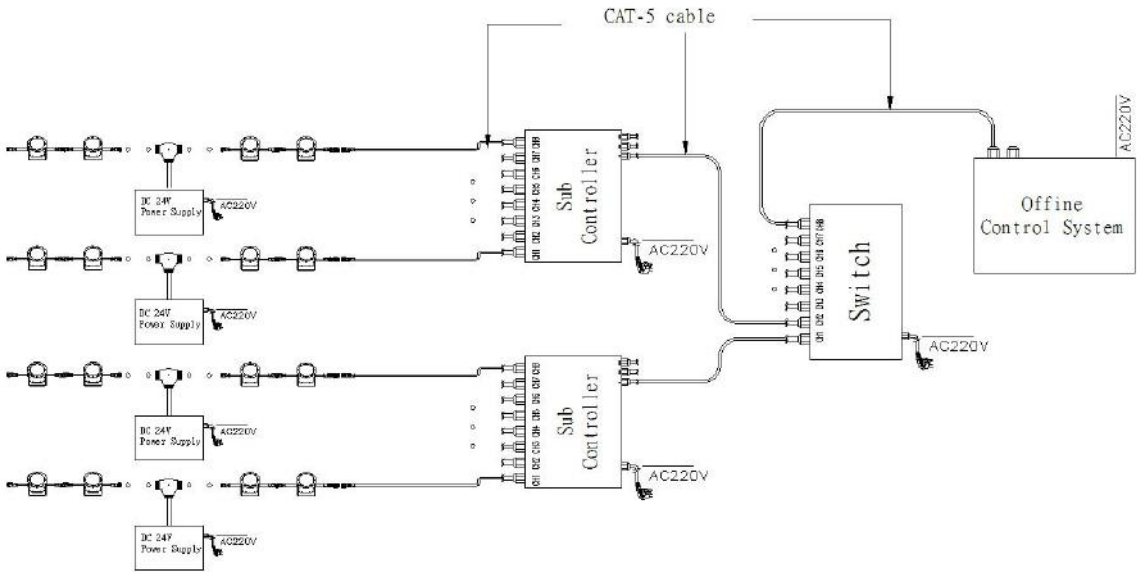

Online Controlling System Diagram

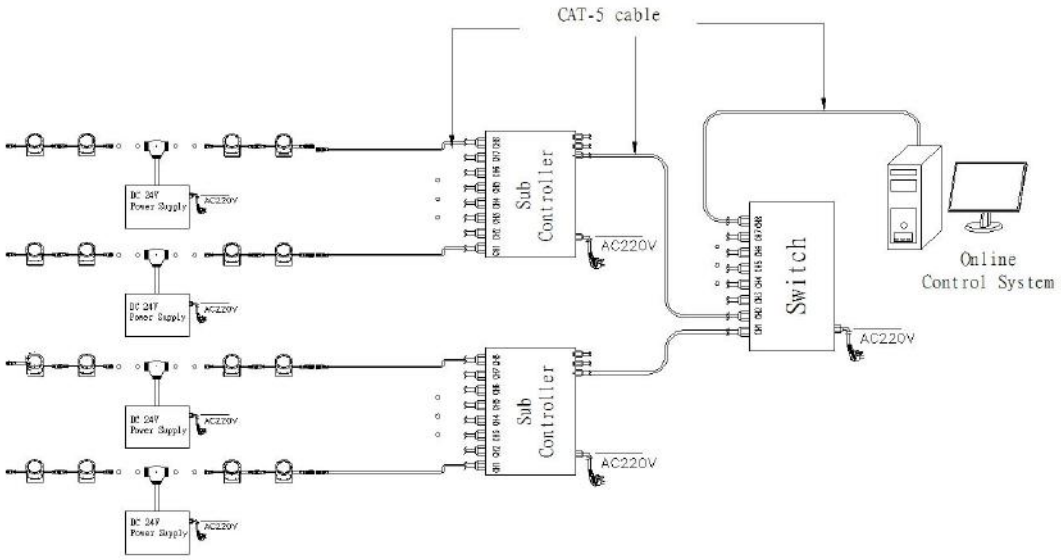

Accessories :

1: Female and Male Connector(Connect to first dot light for signal transmission)

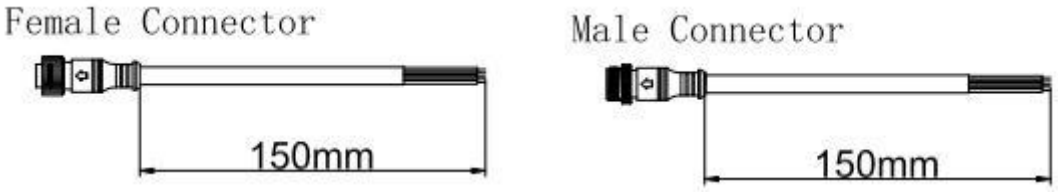

2: Y Shape Connector(For power Distribution)

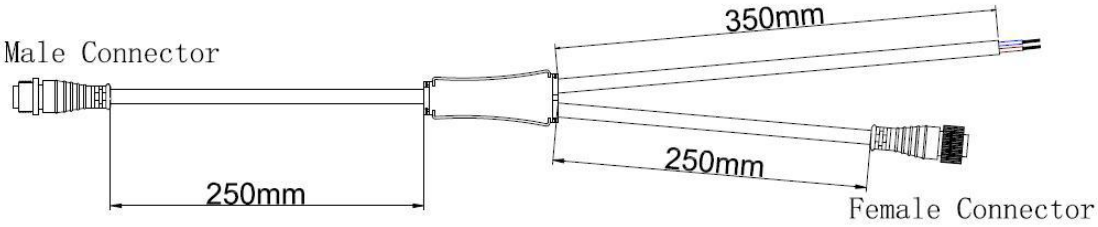

3: Interconnection Cable(1.3M,3M,5M is standard length)



4: End Cap

