EXC-BC245ARL LED Flood Light



Application Environment：
Indoor
Outdoor

Description

EXC-BC245ARL Light tree lamp are high power outdoor landscape flood lighting fixture with high strength aluminum alloy housing by EXC-LED. Each lighting fixture can be used for accent lighting or flood lighting, such as ancient buildings,landscape garden,etc.

Features

- The newest generation technology: DMX512 parallel bus design
- A new generation of structural waterproof design
- High strength aluminum and low thermal resistance path cooling design
- High reliability modularization design
- Adjustable angle 0 degree ~15 degree, glass surface tilt 5 degree design
- Outdoor lighting protection and electrostatic discharge (ESD) protection design
- Load safety design
- Projection distance: 1-5m

Basic Specifications

Color Range	W(2200K-6500K), R+G+B, RGBW
Working Voltage	DC 24V
Max. Power Consumption	50W/W(W, R+G+B), 48W(RGBW)
Light Source	24(W, RGBW), 8+8+8(R+G+B)PCS High Power LEDs
LED chip Brand	Optional(Cree, OSRAM, Lumileds, Epistar, etc...)
CRI	80
Control	DMX512, ON/OFF
Source Life	50,000 h
Housing	High Strength Aluminum
Cover	Tempered glass
Weight	5.44Kg
Dimensions	245mm x 245mm x 323mm (L x W x H, exclude Mounting Bracket)

Installation	Installation with screws
Working Temperature	-40°C to 50°C
Storage Temperature	-40°C to 70°C
Protection Rating	IP66
Efficiency flux	70LM/W(White), 25LM/W(R+G+B), 35LM/W(RGBW)
Beam Angle	W-3030P7: 10° /15° /20° /30° /45° /60° /80° RGB-3030P7 /CREE XP Series： 6° /8° /10° /15° /20° /30° /45° /60° /80° 3535: 30° /45° /60° /80° 5050：17° /20° /30° /45° /60°

Host Controller	EXC-5200
Slave Controller	EXC-2905T1
Signal Cable	EXC-LED outdoor special cable
Light Intensity Distribution	
15° Light Intensity Chart	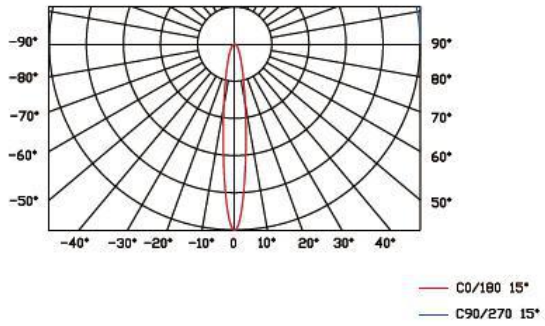
30° Light Intensity Chart	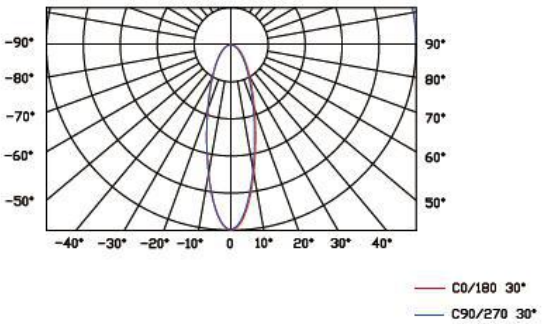
60° Light Intensity Chart	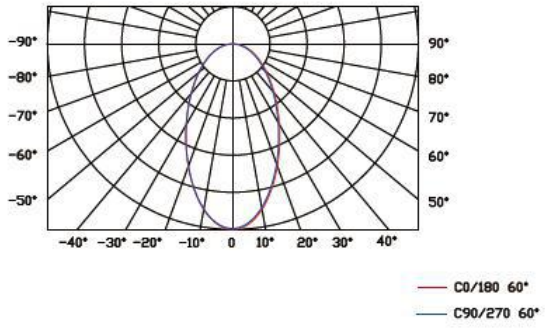

Physical Dimension

Unit：mm

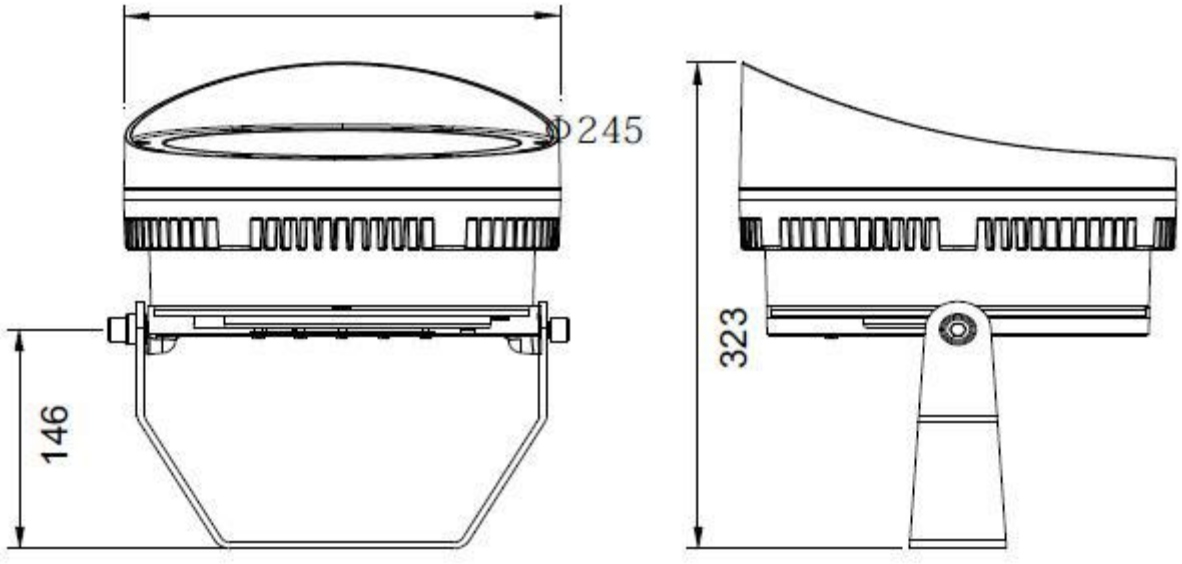

Installation Diagram

Mounting bracket

1. Use M5 screws to fix the lamp mounting bracket to the required position as shown in the figure. Lock the fixing screw of the mounting seat, adjust the angle of the lamp and then lock the connecting screws. Secure the installation.

2. Loosen the angle-adjustable screw, confirm the installation angle, and tighten the angle-adjustable screw.

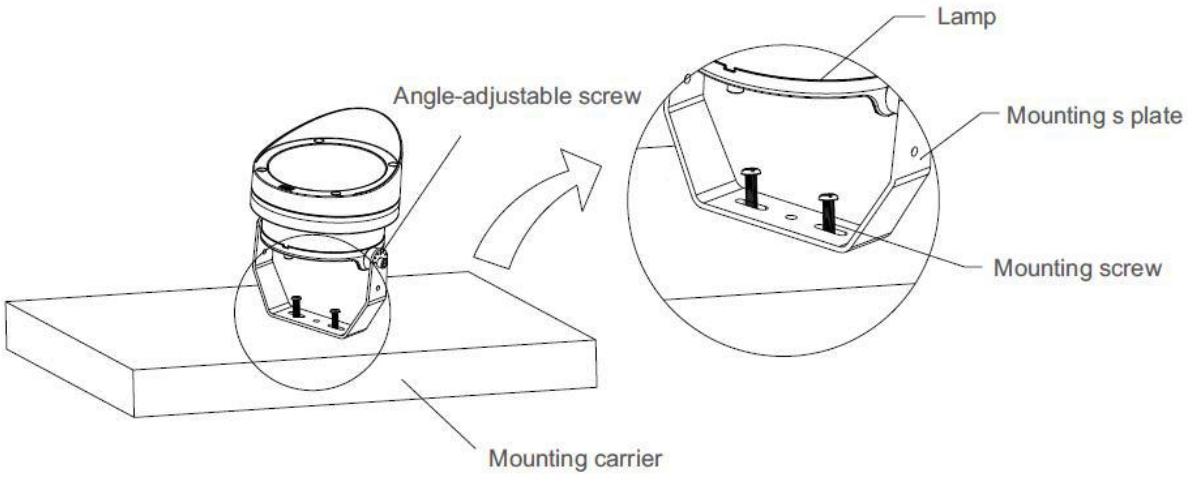

System connection diagram：

1、Host controller should connect with slave controller. Working voltage for controllers are AC220V.

2、On-line main controller should connect with slave controller, on-line main controller and sub controller working voltage are AC220V.

3、each sub-controller with 8 ports, with each port 512 pixels, supporting data converter, supports 100 meters ultra-long haul transmission.

4、The CAT-5 e. cable distance should be within 100 meters between host controller and slave controller, between slave controllers and switch, etc.

Offline Controlling System Diagram

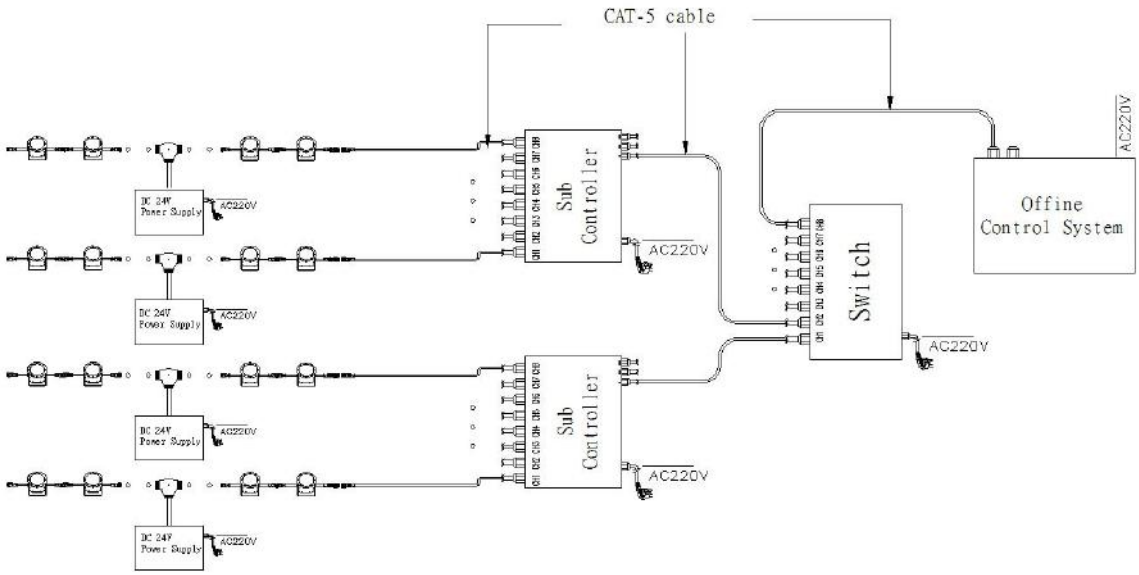

Online Controlling System Diagram

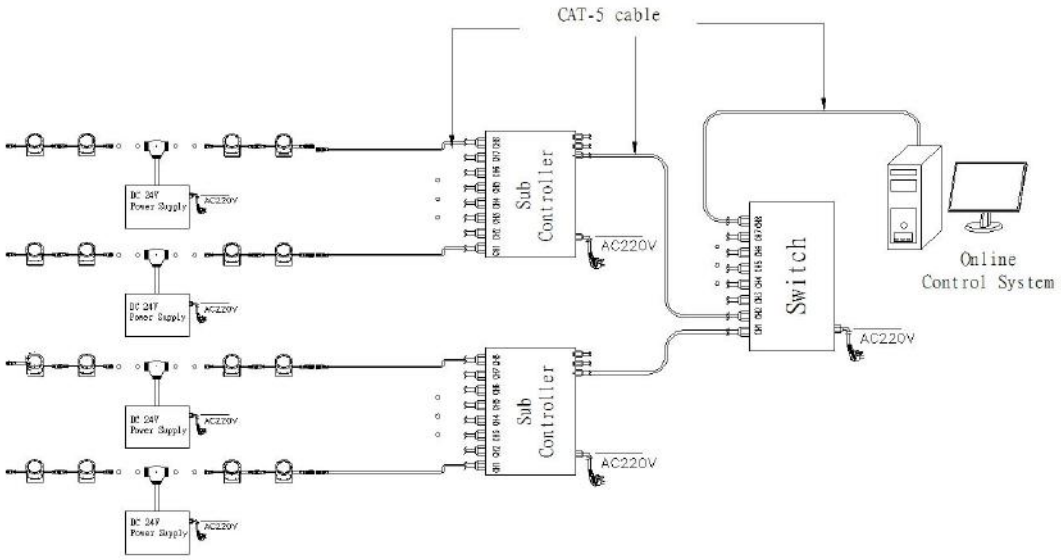

Accessories :

1: Female and Male Connector(Connect to first dot light for signal transmission)

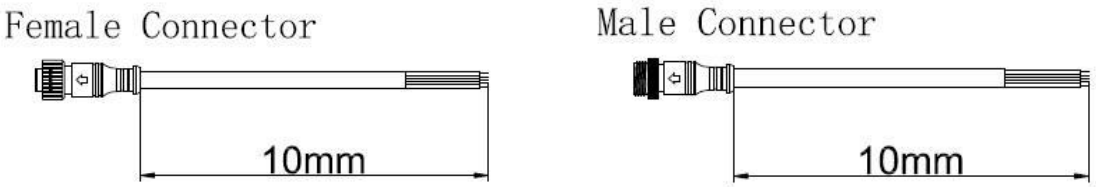

2: Y Shape Connector(For power Distribution)

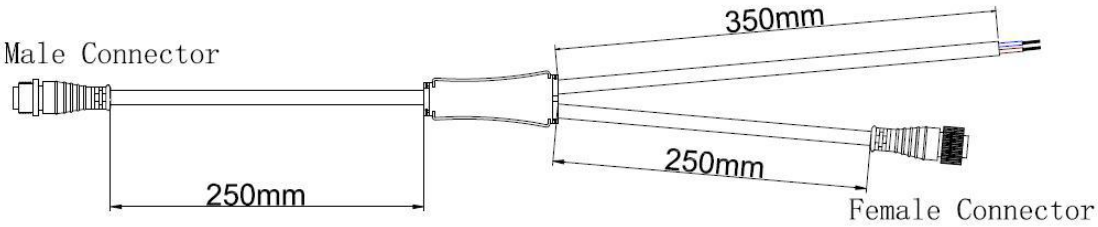

3: Interconnection Cable(1.3M,3M,5M is standard length)



4: End Cap

