EXC-B150B LED Panel Light



Application Environment：
Indoor
Outdoor

Description：

EXC-F500A full series is latest facial makeup series LED lighting fixture which is designed by EXC-LED. It's transparent in daytime which doesn't affect natural lighting and visual effect. Each lighting fixture is an independent pixel, with high strength aluminum alloy base. Easy and reliable installation. It's ideal for glass curtain wall decoration.

Features：

- The newest generation technology: DMX512 parallel bus design
- Transparent lighting fixture design won't affect glass building lighting transmission
- Imported even panel ideal for uniform lighting effect
- Design of full-sealed filling waterproof method by imported glue
- Design of outdoor lightning protection and electrostatic discharge (ESD) protection
- Best solution for glass curtain wall lighting project.

Basic Specifications	
Color Range	W(2200K-6500K), RGB, RGB+W
Working Voltage	DC 24V
Max. Power Consumption	6W
Light Source	24(White, RGB), 12+12(RGB+W) PCS High Power LEDs
LED chip Brand	Optional(Cree, OSRAM, Lumileds, Epistar, etc...)
CRI	80
Control	DMX512, ON/OFF
Source Life	50,000 h
Housing	High Strength Aluminum
Cover	Guide plate
Weight	1.7Kg(Single module lamp)

Dimensions	148mm x 175.5mm x 68mm (L x W x H, exclude Mounting Bracket)
Installation	Installation with screws or adhesive
Working Temperature	-30°C to 50°C
Storage Temperature	-40°C to 70°C
Protection Rating	IP66
Luminous Flux	35LM/W(White), 10LM/W(RGB),15LM/W(RGB)
Beam Angle	⩾110°

Host Controller	EXC-5200
Slave Controller	EXC-2905T1
Signal Cable	EXC-LED outdoor special cable

Light Intensity Distribution

Light Intensity Chart

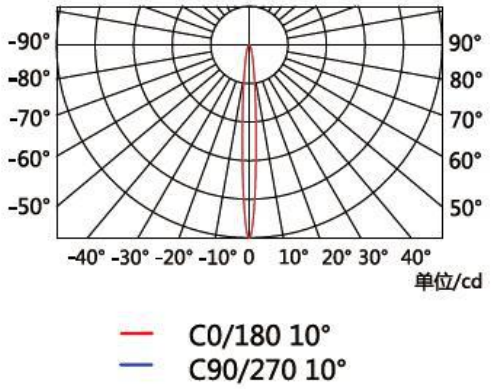

Physical Dimension

Unit：mm

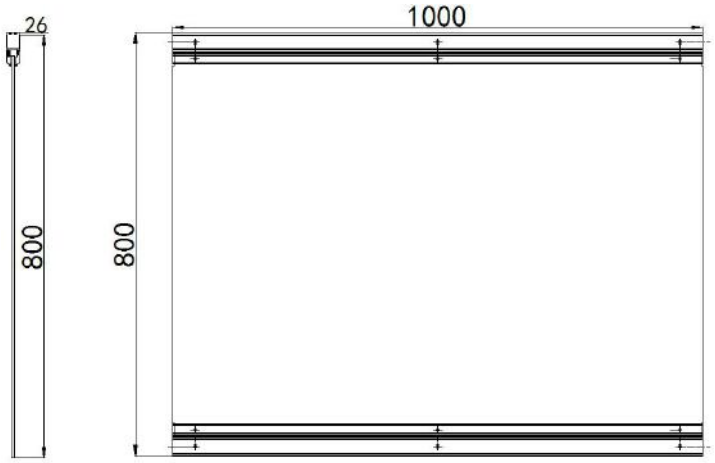

Mounting Accessories 1

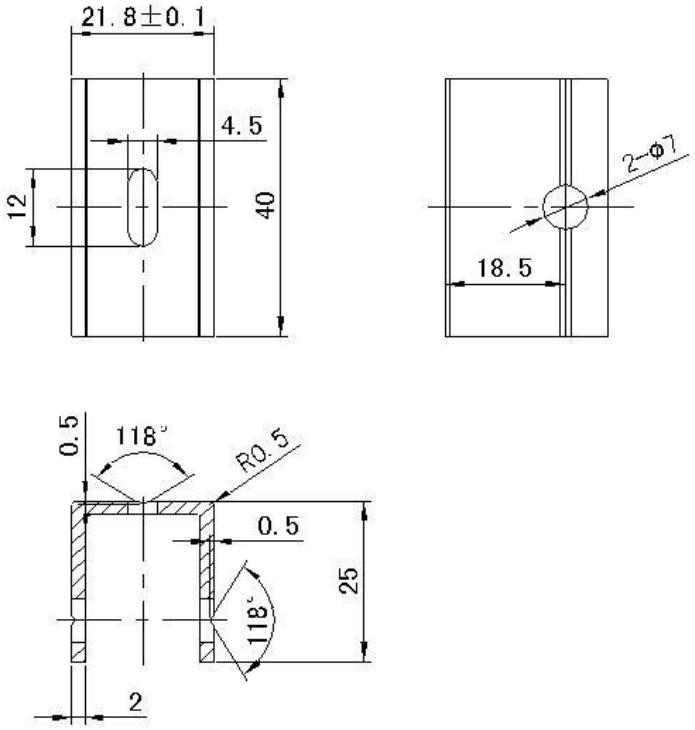

Installation Diagram

1. Use 2 combination M5 screw and fix the high bracket assembly at the bottom of the lamp

方式一、选用M6*50自攻螺丝，按如图
方式将安装座固定到需求位置.

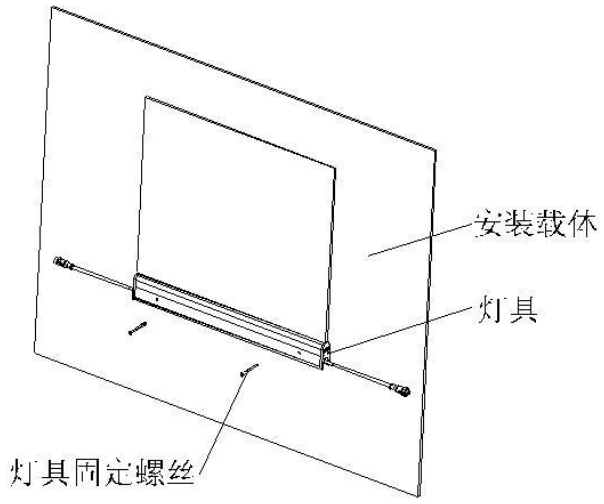

2. As shown in the figure, surround the tree with lamps and connect each lamp with M5 combination screw

方式二、步骤1：选用M4螺丝，按如图方式将安装座固定到需求位置，具体间距按灯具长度要求.

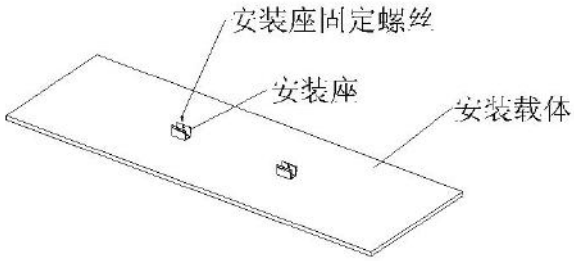

3. As shown in the figure, insert the lamp brackets into the ground

步骤2：将灯具卡在安装座上，再用M6*35的螺丝通过安装座将灯具锁紧，注意安装劳固。

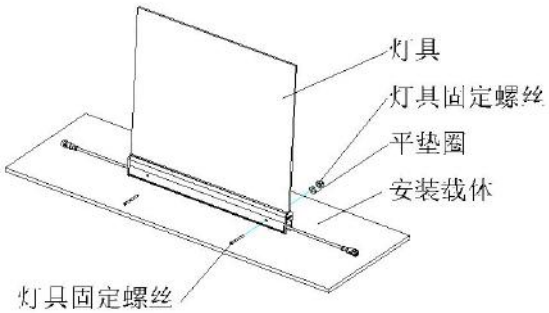

System connection diagram：

1、Host controller should connect with slave controller. Working voltage for controllers are AC220V.

2、On-line main controller should connect with slave controller, on-line main controller and sub controller working voltage are AC220V.

3、each sub-controller with 8 ports, with each port 512 pixels, supporting data converter, supports 100 meters ultra-long haul transmission.

4、The CAT-5 e. cable distance should be within 100 meters between host controller and slave controller, between slave controllers and switch, etc.

Offline Controlling System Diagram

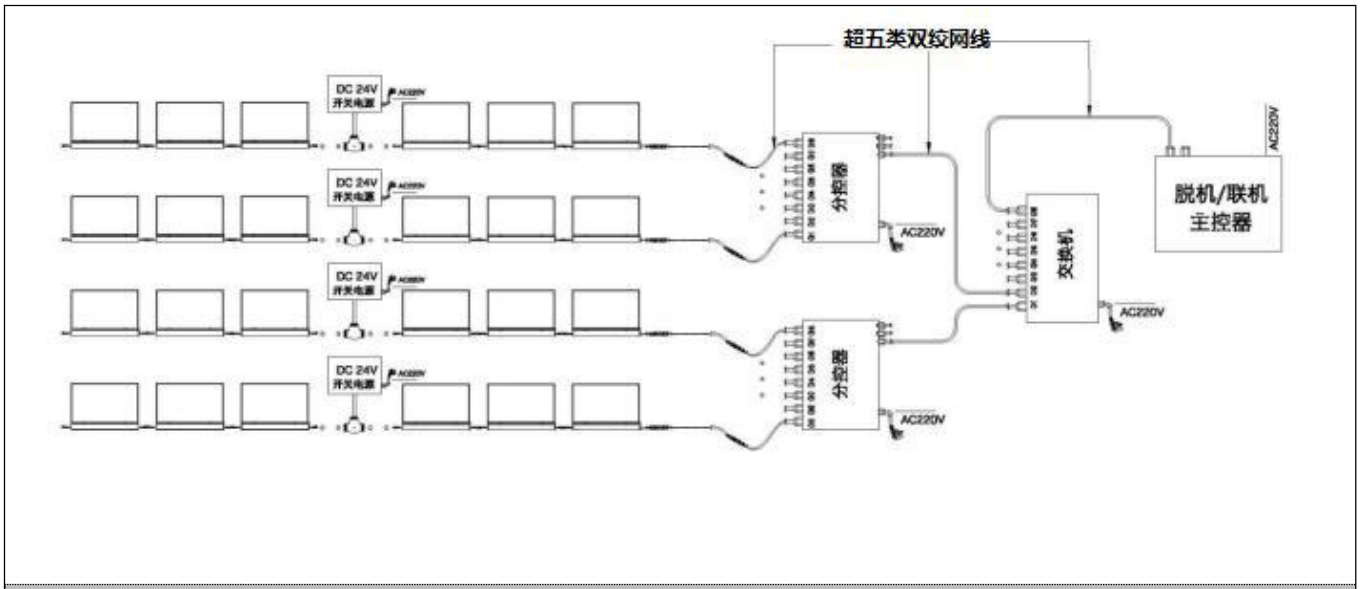

Online Controlling System Diagram

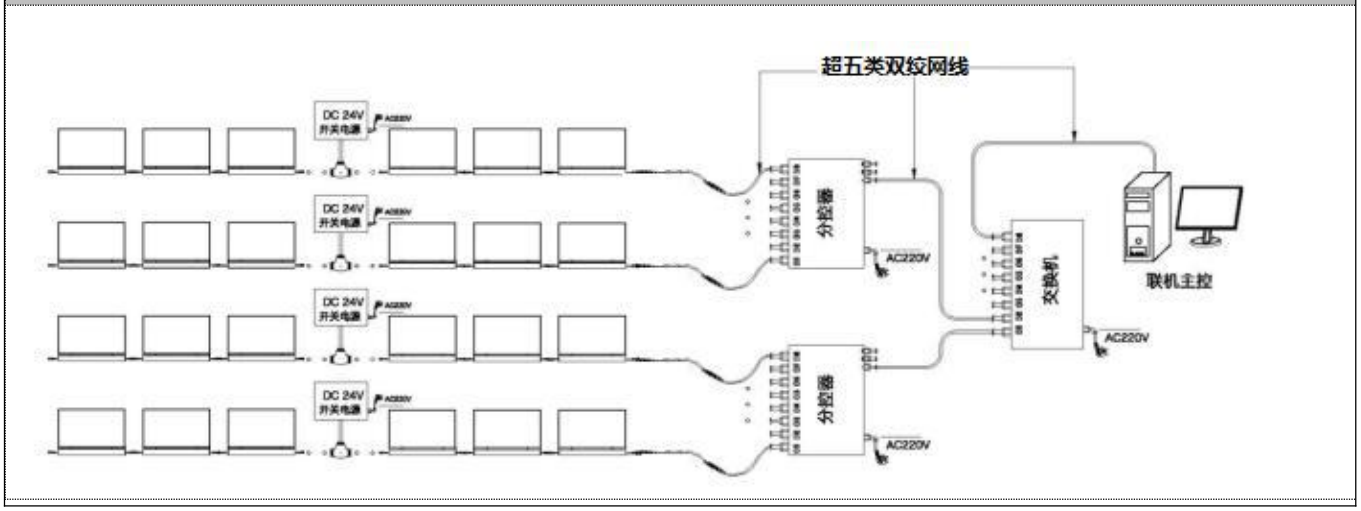

Accessories :

1: Female and Male Connector(Connect to first dot light for signal transmission)

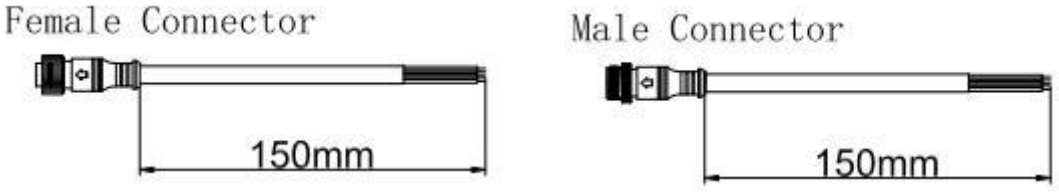

2: Y Shape Connector(For power Distribution)

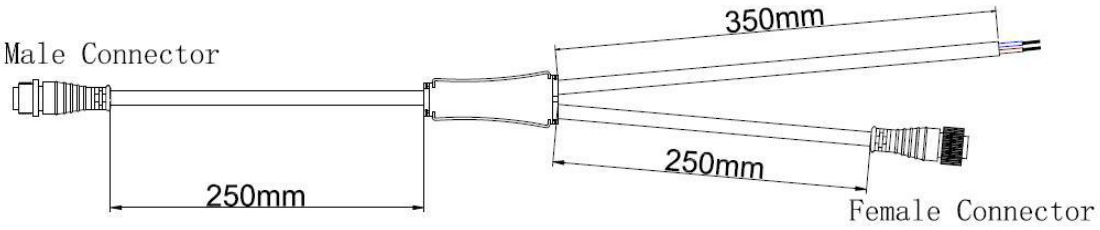

3: Interconnection Cable(1.3M,3M,5M is standard length)



4: End Cap

