EXC-P22EP LED Pixel Light



Application Environment：
Indoor
Outdoor

Description

EXC-P22EP full color series are a full-color LED series string LED pixel, which are designed for outdoor landscape lighting by EXC-LED. Each EXC-P22EP pixel is a separate lighting pixel, and each pixel can realize 256 grades gray scale changing. They can be used for indoor and outdoor applications, such as building facade, shopping mall, celebration ceremony or party decoration. Customized pixel pitch, and easy installation.

Features

- The newest generation technology: DMX512 parallel bus design
- Clip on-off style connection and anti-pull connection without connector design
- High thermal conductivity transformer and full-sealed filling waterproof method by German imported glue
- Outdoor lighting protection and electrostatic discharge (ESD) protection design

Basic Specifications	
Color	RGB, W，RGBW
Working Voltage	DC5V
Max. Power Consumption	0.3W
Light Source	1 pcs SMD LEDs
CRI	80
Control	DMX512，ON/OFF
Grey Scale	8bit，16bit
Source Life	50,000h
RDM	Optional
LED chip Brand	Optional(Cree, OSRAM, Lumileds, Epistar, etc...)
Cover	PC(Transparent, Opal, Crystal)
Housing	PC+ABS
Weight	10g

Dimensions	30mm x 26mm x 17.45mm (L x W x H, exclude Mounting Bracket)
Installation	Installation with screws or adhesive
Working Temperature	-40°C to 50°C
Storage Temperature	-40°C to 70°C
Protection Rating	IP66
Luminous Flux	25LM/W(RGB), 50LM/W(White), 30LM/W(RGBW)
Central Light Intensity	⩾3cd(RGB)
Beam Angle	⩾105°

Light Intensity Distribution

Light Intensity Chart

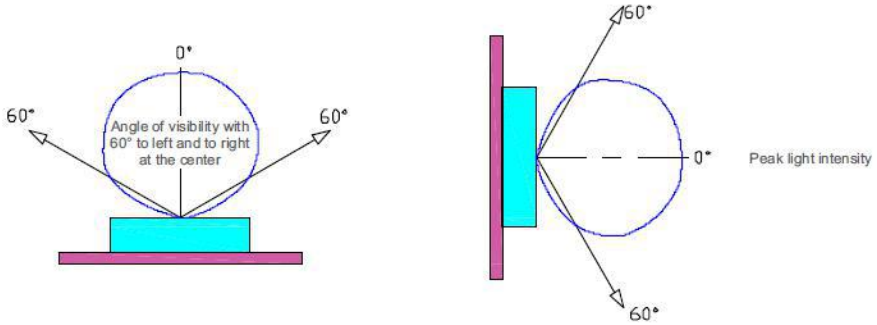

Physical Dimension

Unit：mm

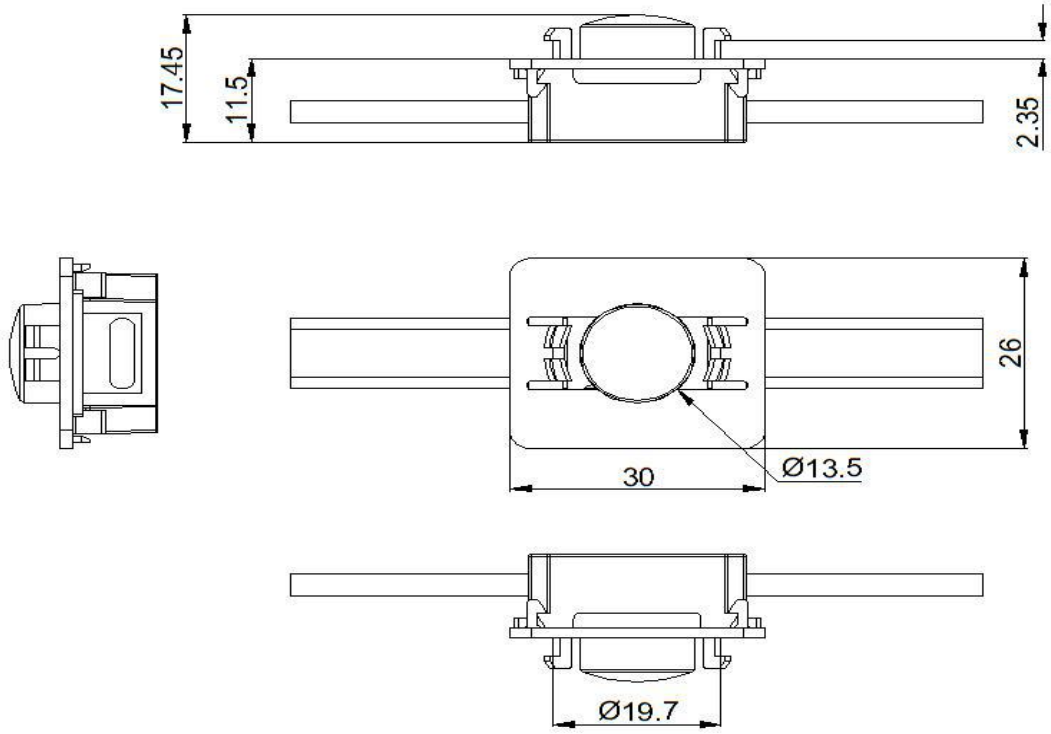

Mounting Accessories 1:

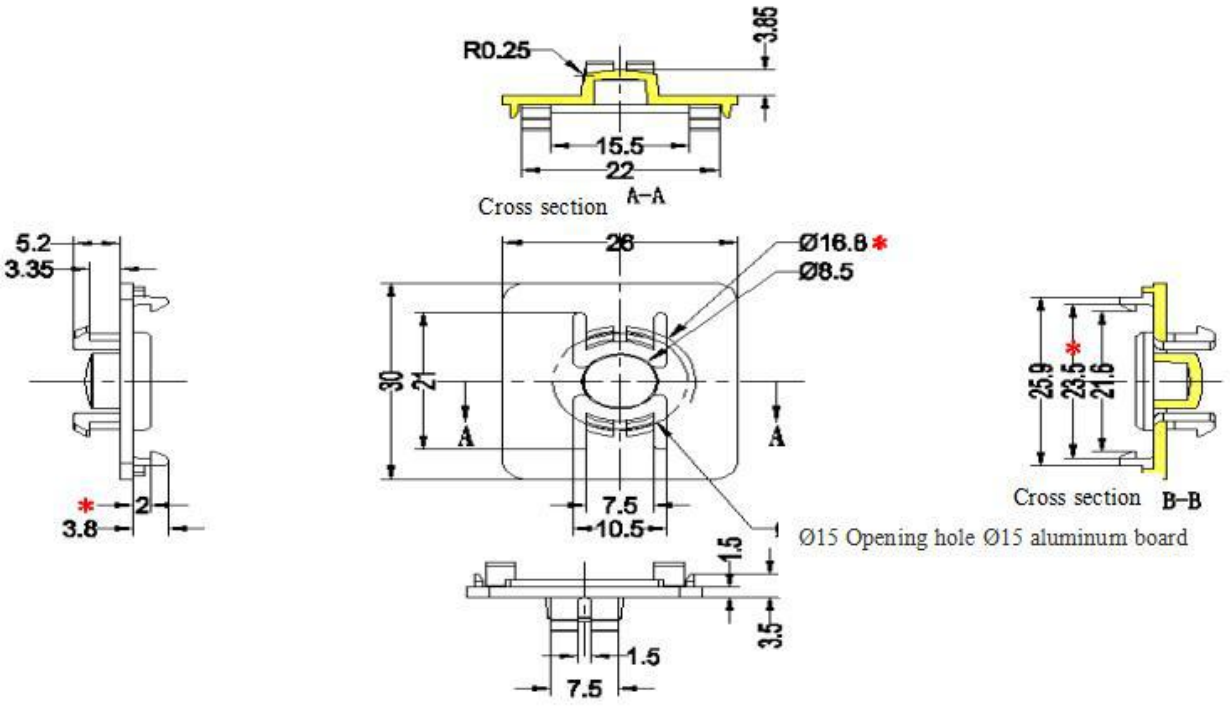

Installation Diagram

Mount by clip

Step 1: Fasten the mount to the lamp point as shown in the picture and complete it in the factory.

Step 2: Fasten the completed lamp to the mounting plate through the buckle as shown in the figure. The specific spacing is according to the order requirements.

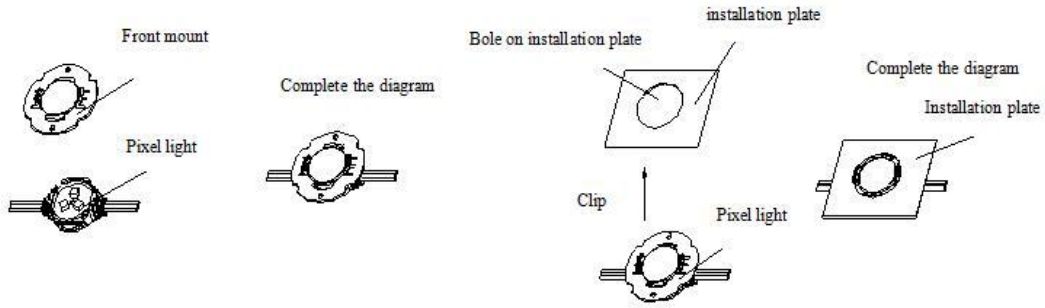

System connection diagram：

1、Host controller should connect with slave controller. Working voltage for controllers are AC220V.

2、On-line main controller should connect with slave controller, on-line main controller and sub controller working voltage are AC220V.

3、each sub-controller with 8 ports, with each port 512 pixels, supporting data converter, supports 100 meters ultra-long haul transmission.

4、The CAT-5 e. cable distance should be within 100 meters between host controller and slave controller, between slave controllers and switch, etc.

Online Controlling System Diagram

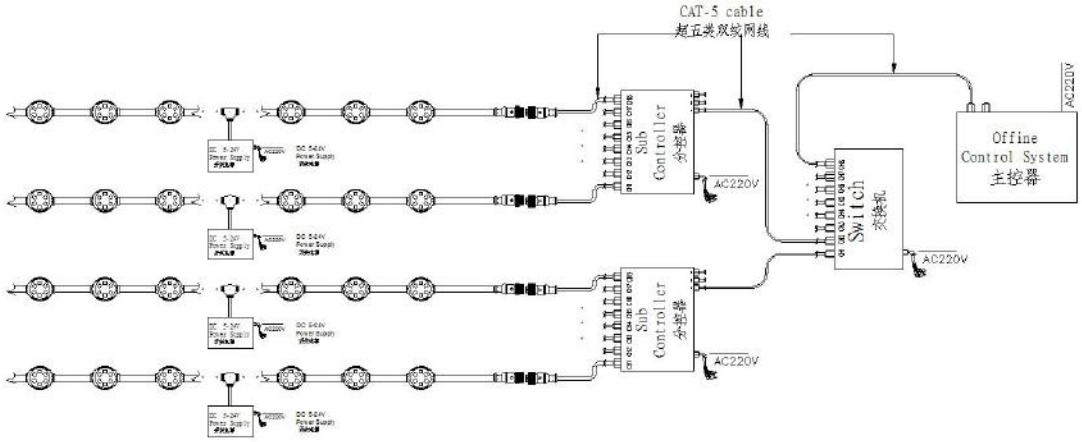

Offline Controlling System Diagram

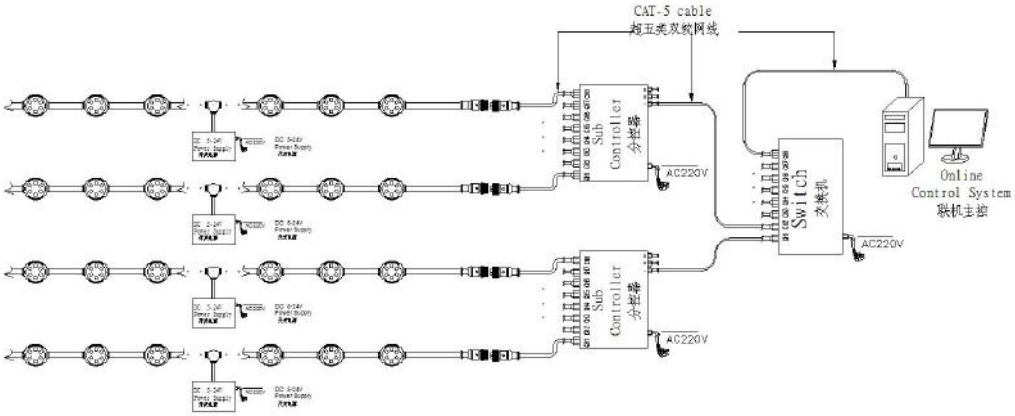

Accessories :

1: Female and Male Connector(Connect to first dot light for signal transmission)

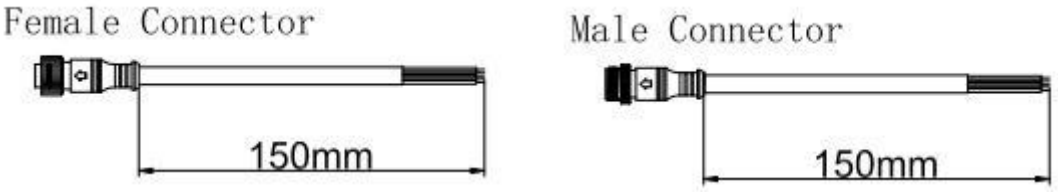

2: Y Shape Connector(For power Distribution)

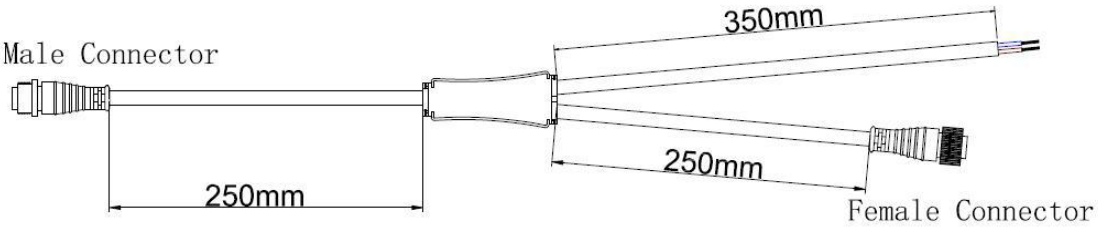

3: Interconnection Cable(1.3M,3M,5M is standard length)



4: End Cap

