EXC-P53AM0 LED Pixel Light



Application Environment：
Indoor
Outdoor

Description

EXC-P53AP2 full-color series consists of full-color chip LED string pixel lights specially designed by EXC for outdoor landscape lighting. It adopts top-level optical vision angle design, super remote multi-color and visual brightness consistency technology and precision control. Each pixel is a separate four-primary lighting pixel, and each pixel can realize 65536 grades gray scale changing; they can be used for extra-large area display of building facades, contour shaping, interior and exterior surface decoration lighting; the pixel pitch can be customized; the installation methods are various.

Features

- The newest generation technology: DMX512 parallel bus design
- Close range anti-glare optical design
- Integrated clip-on endless connection
- Fully sealed and waterproof design with high thermal conductive adhesive imported from Germany
- Special outdoor lightning and ESD protection

Basic Specifications

Color	W(2200-6500K), RGB, RGB+W
Working Voltage	15V/24V
Max. Power Consumption	2.7W
Light Source	9pcs SMD LEDs
CRI	80
Control	ON/OFF, DMX512
Grey Scale	8bit, 16bit
Source Life	50,000h
RDM	Optional
LED chip Brand	Optional(Cree, OSRAM, Lumileds, Epistar, etc...)
Cover	PC(Transparent,Opal)
Housing	Aluminium
Weight	65g
Dimensions	65mm x 55.5mm x 16.5mm (L x W x H, exclude Mounting Bracket)
Installation	Installation with profiles

Working Temperature	-40°C to 50°C
Storage Temperature	-40°C to 70°C
Protection Rating	IP66
Luminous Flux	25LM/W(RGB), 50LM/W(White), 30LM/W(RGBW)
Central Light Intensity	45cd(W)/27cd(RGB)/36.5cd(RGB+W)
Beam Angle	120°/80°*120°

Light Intensity Distribution

Light Intensity Chart

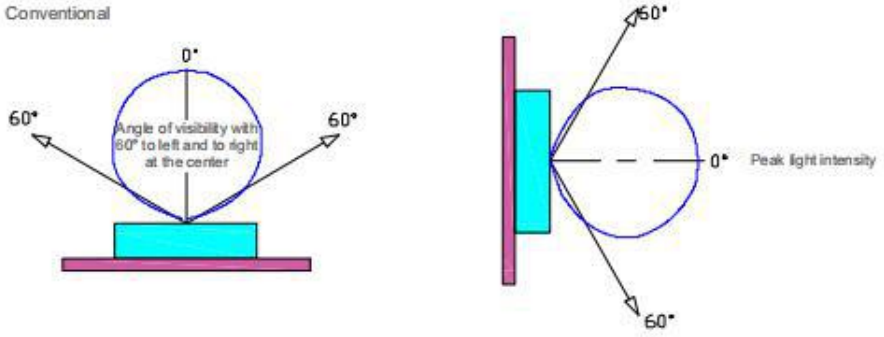

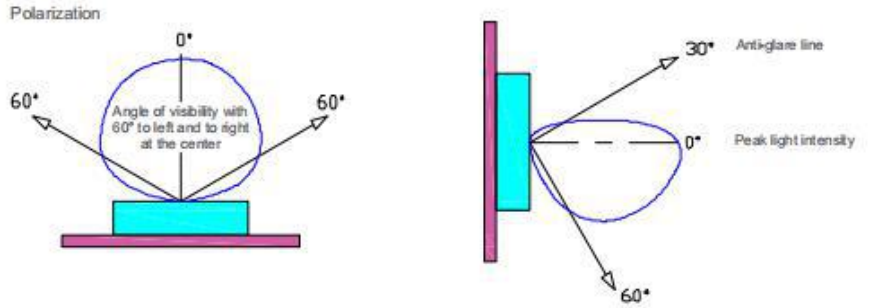

Physical Dimension

Unit：mm

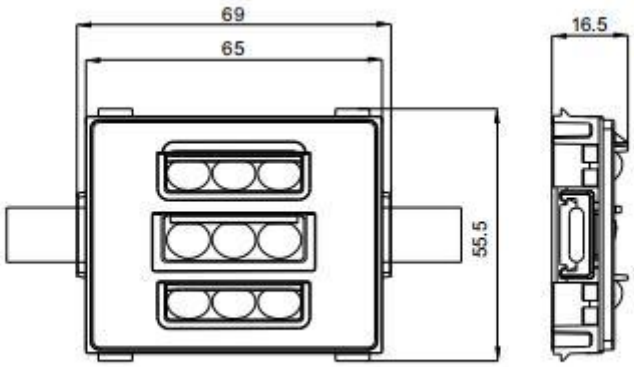

Installation By Aluminum Profile

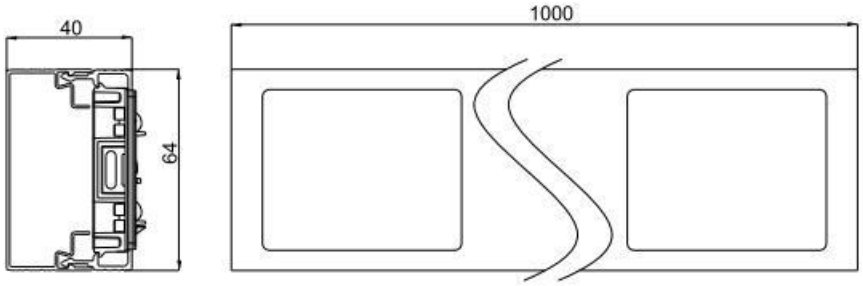

System connection diagram：

1、Host controller should connect with slave controller. Working voltage for controllers are AC220V.

2、On-line main controller should connect with slave controller, on-line main controller and sub controller working voltage are AC220V.

3、each sub-controller with 8 ports, with each port 512 pixels, supporting data converter, supports 100 meters ultra-long haul transmission.

4、The CAT-5 e. cable distance should be within 100 meters between host controller and slave controller, between slave controllers and switch, etc.

Online Controlling System Diagram

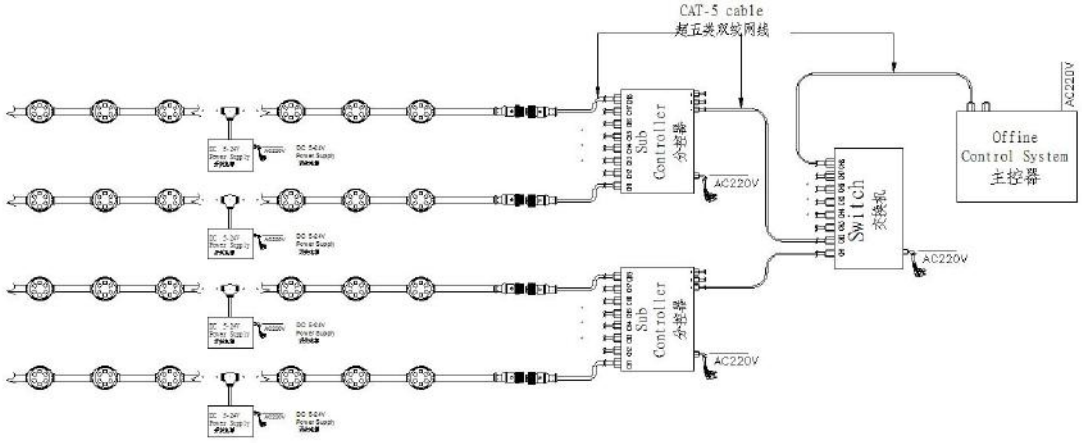

Offline Controlling System Diagram

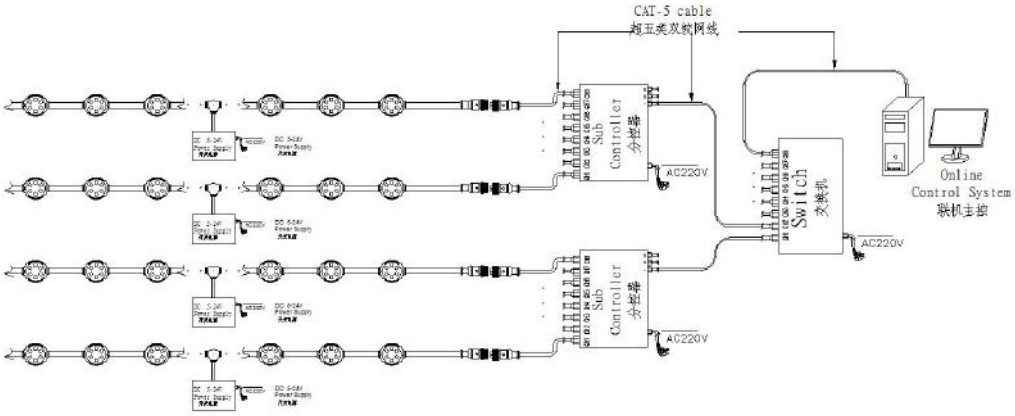

Accessories :

1: Female and Male Connector(Connect to first dot light for signal transmission)

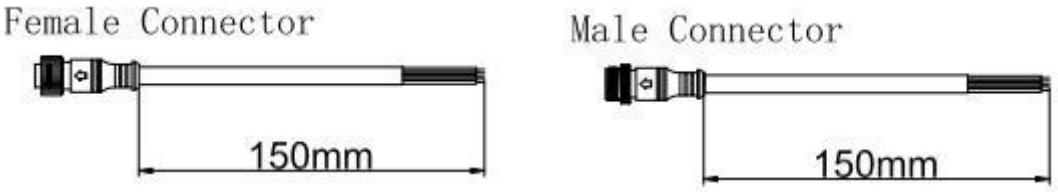

2: Y Shape Connector(For power Distribution)

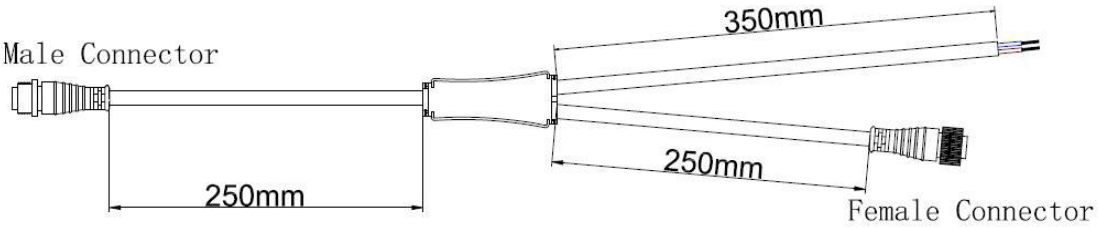

3: Interconnection Cable(1.3M,3M,5M is standard length)



4: End Cap

