EXC-SMG Floor-embedded Lamp



Application Environment：
Indoor
Outdoor

Description：

EXC-SMG is a High strength square lighting fixture mainly designed for landscape lighting by EXC-LED, module design, can be any combination and single use. This products adopt extruded aluminum alloy housing and tempered glass, with double waterproof design, to meet the IP67 application requirements. Each EXC-SMG is a separate lighting pixel; Particularly suitable for garden square, pedestrian street, courtyard, dance hall and other personalized application, can be also used for embedded wall lighting..

Features：

- Module design, Can be any combination
- Double waterproof design
- The newest generation technology: DMX parallel bus design
- Double redundance addressing protection

Basic Specifications	
Color Range	W(2200K-6500K), RGB
Working Voltage	DC 24V
Max. Power Consumption	3W
Light Source	12 PCS High Power LEDs
LED chip Brand	Optional(Cree, OSRAM, Lumileds, Epistar, etc...)
CRI	80
Control	DMX512, ON/OFF
Source Life	50,000 h
Housing	High Strength Aluminum
Cover	Tempered glass
Weight	0.7Kg
Dimensions	100mm x 100mm x 65mm (L x W x H, exclude Mounting Bracket)

Installation	Install inthe embedded frame
Working Temperature	-30°C to 50°C
Storage Temperature	-40°C to 70°C
Protection Rating	IP66
Luminous Flux	50LM/W(White), 20LM/W(RGB)
Beam Angle	120°

Host Controller	EXC-5200
Slave Controller	EXC-2905T1
Signal Cable	EXC-LED outdoor special cable

Light Intensity Distribution

120°
Light Intensity Chart

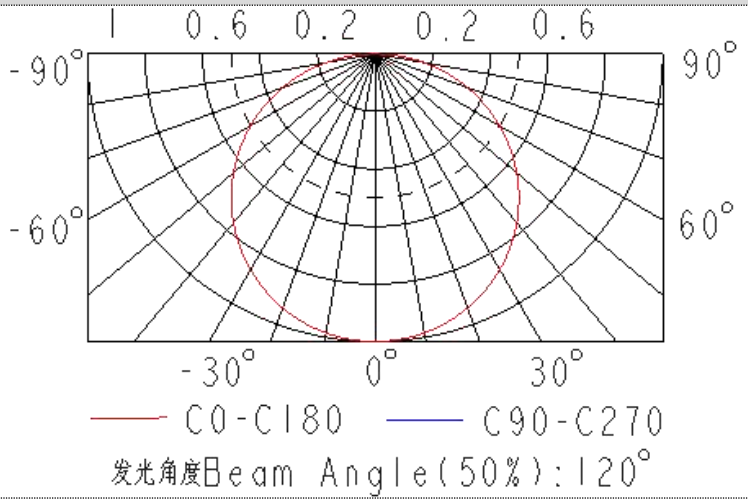

Physical Dimension

Unit：mm

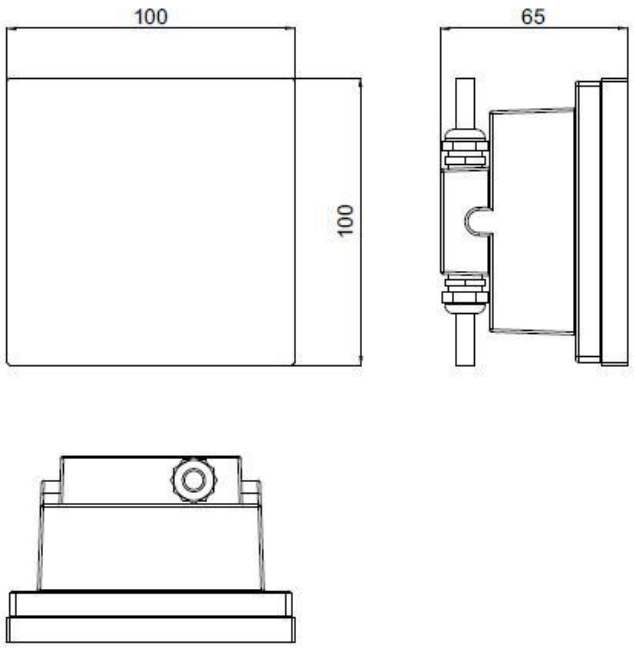

Installation Diagram

First install the embedded frame of the lamp to the desired location

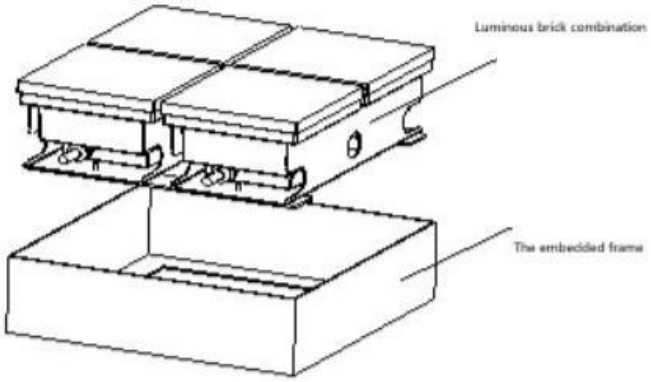

Then install the luminaire into the embedded frame, as shown in the figure

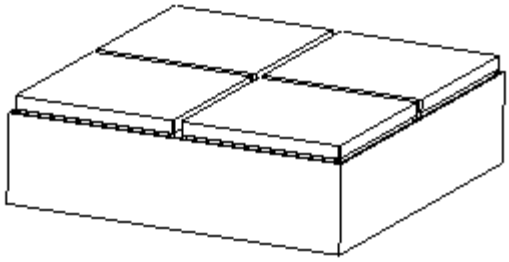

Can be any combination：

2*2

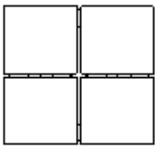

3*3

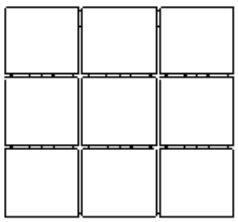

4*4

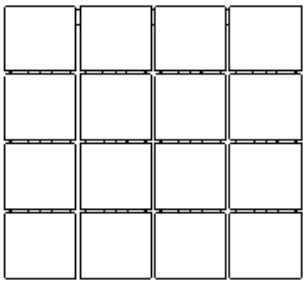

5*5

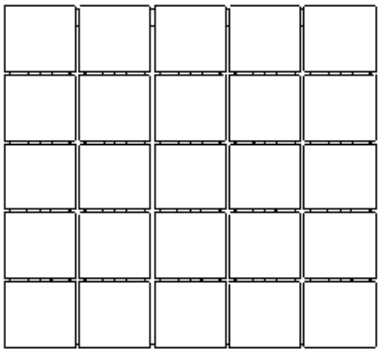

System connection diagram：

1、Host controller should connect with slave controller. Working voltage for controllers are AC220V.

2、On-line main controller should connect with slave controller, on-line main controller and sub controller working voltage are AC220V.

3、each sub-controller with 8 ports, with each port 512 pixels, supporting data converter, supports 100 meters ultra-long haul transmission.

4、The CAT-5 e. cable distance should be within 100 meters between host controller and slave controller, between slave controllers and switch, etc.

Offline Controlling System Diagram

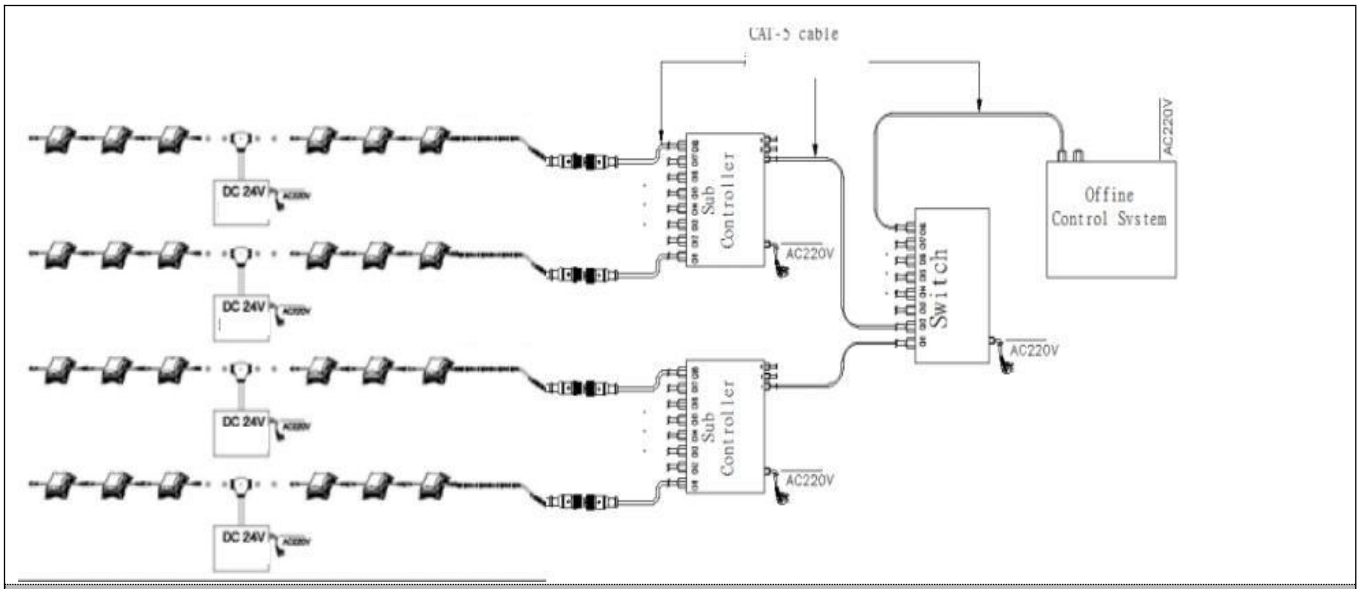

Online Controlling System Diagram

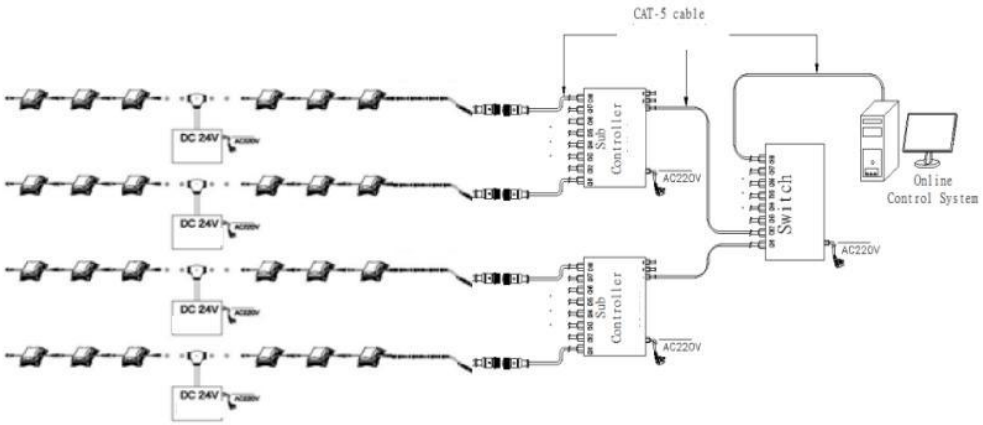

Accessories :

1: Female and Male Connector(Connect to first dot light for signal transmission)

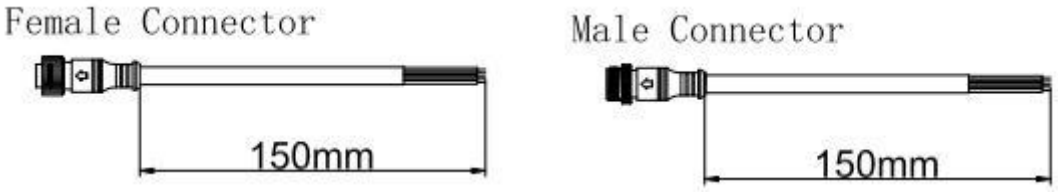

2: Y Shape Connector(For power Distribution)

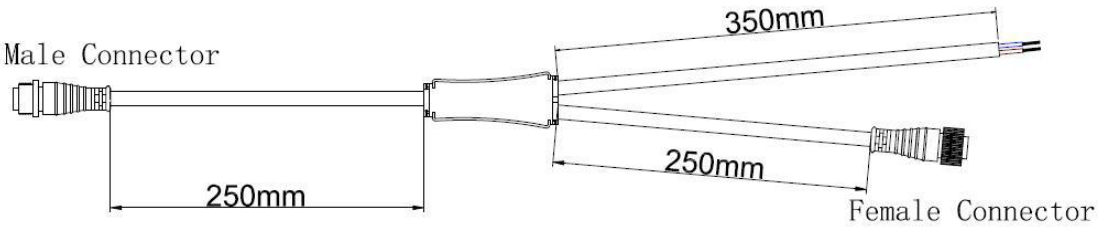

3: Interconnection Cable(1.3M,3M,5M is standard length)



4: End Cap

