EXC-U20TAL1 LED Linear light

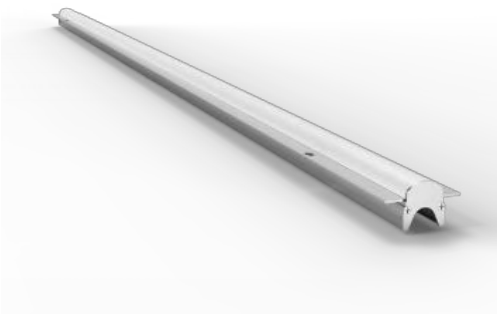

Application Environment：
Indoor
Outdoor

Description

EXC-U20TAL1 full color series products are extra-narrow LED linear light with aluminum shell for outdoor landscape decoration. The width of EXC-U20NB is only 20mm, each one with 8 pixels and each pixel can realize 8bit/16bit grade gray scale color changing. EXC-U20NB can be applicable for super large area displaying or outline the building. It also can be used to decorate facade inside and outside, even small area wall-washing effect

Features

- Only 20mm width, very compact design.
- The newest generation technology: DMX512 parallel bus design
- Full-sealed filling waterproof design by German imported glue
- Aluminum alloy lamp body with low thermal resistance path heat dissipation design
- Outdoor lightning protection and electrostatic discharge (ESD) protection design

Basic Specifications

Color Range	RGB/RGBW/W
Working Voltage	DC 24V
Max. Power Consumption	9W/12W/15W/18W
Light Source	36/48/60 pcs LEDs
LED chip Brand	Optional(Cree, OSRAM, Lumileds, Epistar, etc...)
CRI	80
Control	DMX512, ON/OFF
Segment	1/4/6/8/10
Source Life	50,000 h
Housing	High strength aluminum alloy
Cover	PC(Transparent, Opal)

Weight	0.45Kg
Working Temperature	-20°C to 50°C
Storage Temperature	-40°C to 70°C
Protection Rating	IP66
Efficiency flux	50LM/W(White), 25LM/W(RGB), 35LM/W(RGBW)， milky diffuser(decrease 30%-50%）
Beam Angle	≥105°

Host Controller	EXC-5200
Slave Controller	EXC-2905T1
Signal Cable	EXC-LED outdoor special cable

Light Intensity Distribution

Light Intensity Chart	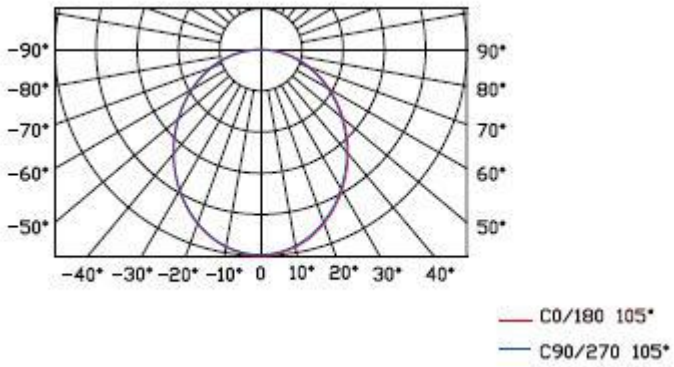

Physical Dimension

Unit：mm

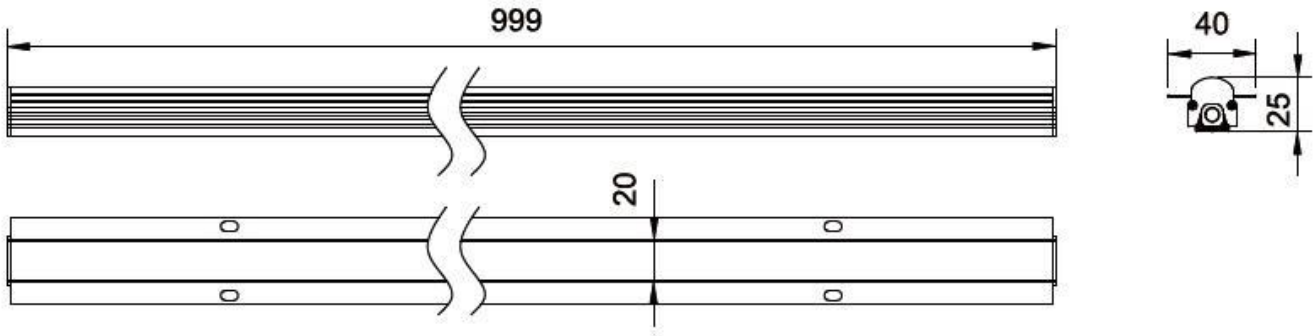

System connection diagram：

1、Host controller should connect with slave controller. Working voltage for controllers are AC220V.

2、On-line main controller should connect with slave controller, on-line main controller and sub controller working voltage are AC220V.

3、 each sub-controller with 8 ports, with each port 512 pixels, supporting data converter, supports 100 meters ultra-long haul transmission.

4、The CAT-5 e. cable distance should be within 100 meters between host controller and slave controller, between slave controllers and switch, etc.

Offline Controlling System Diagram

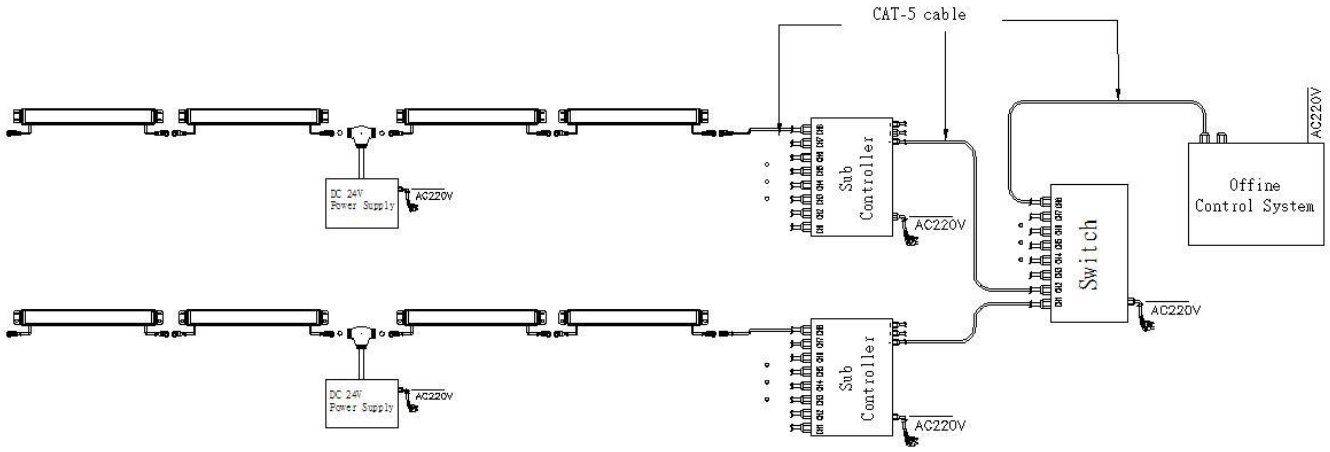

Online Controlling System Diagram

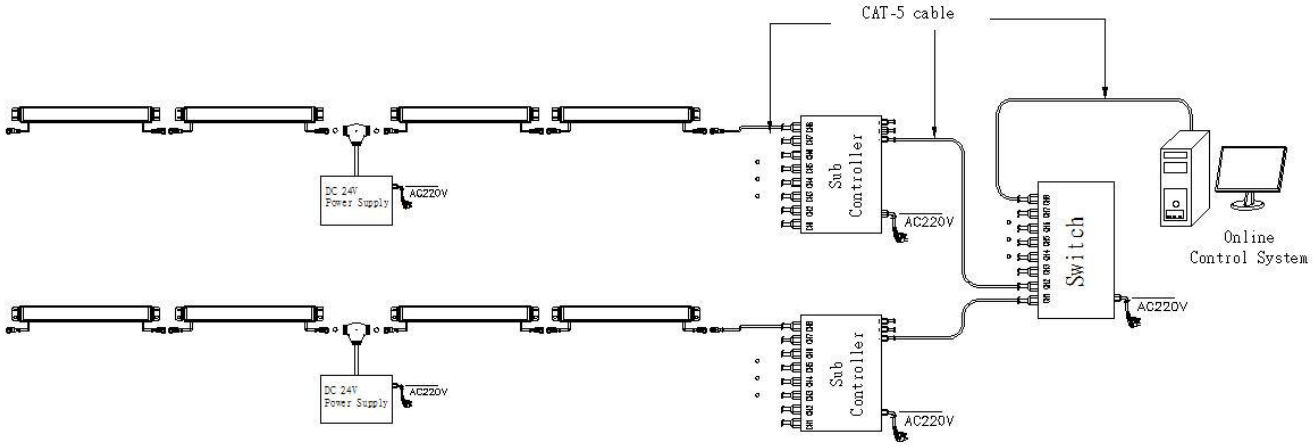

Accessories :

1: Female and Male Connector(Connect to first dot light for signal transmission)

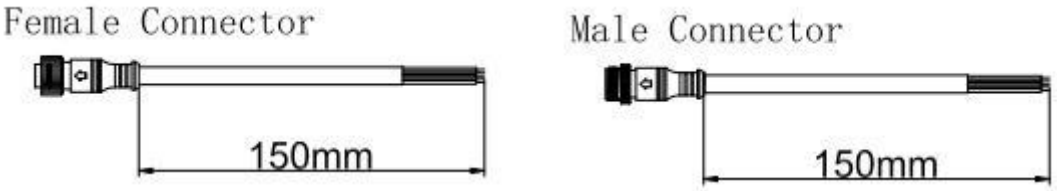

2: Y Shape Connector(For power Distribution)

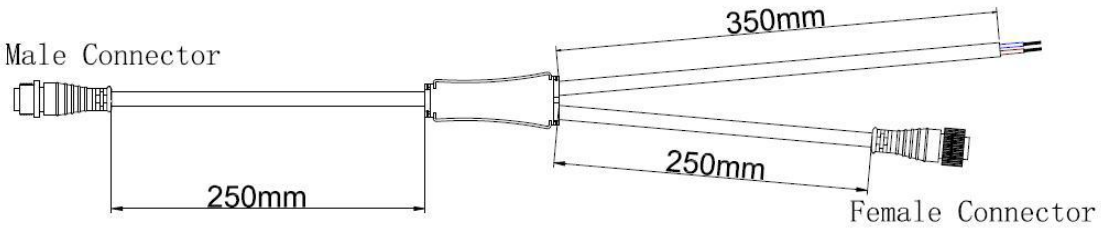

3: Interconnection Cable(1.3M,3M,5M is standard length)



4: End Cap

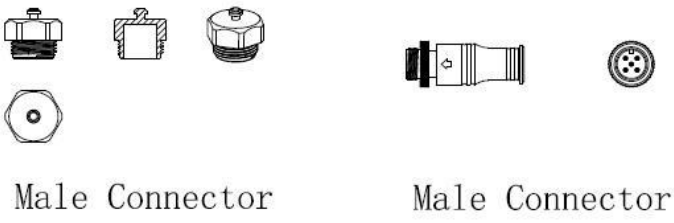

深圳爱克莱特科技股份有限公司
Shenzhen EXC-LED Technology Co., Ltd
地址：中国深圳市宝安区松岗街道松岗大道11号健仓科技园
Add: Jiancang Tech Park,Songgang Blvd. No.11,Songgang St.,Baoan,Shenzhen,China
Http://www.exc-led.com E-mail: exc@exc-led.com Tel: 4008-777-189