EXC-U300ADB0 LED Linear light



Application Environment：
Indoor
Outdoor

Product description：

EXC-U300ADB0 full color series product are compact and invisible SMD LED linear light with aluminum shell for outdoor landscape decoration. The fixture can integrate entirely with the building, not affect the building appearance in daytime and show wonderful lighting effect at night. EXC-U300A can be applicable for super large area displaying or outline the building. It also can be used to decorate facade inside and outside, also reinforce the normal lighting function .

Features

- Very compact design, only 23mm thickness.
- Invisible design concept, combine with building very well
- Aluminum alloy lamp body with low thermal resistance path heat dissipation design
- Outdoor lightning protection and electrostatic discharge (ESD) protection design
- Design of top hanging line, simple and convenient installation;
- All aluminum metal, ultra-thin design, high - grade, graceful structure;

Basic Specifications

Color Range	W(2200K-6500K), RGB
Working Voltage	DC24V
Max. Power Consumption	12W, 15W
Light Source	48, 60 pcs SMD LEDs
LED chip Brand	Optional(Cree, OSRAM, Lumileds, Epistar, etc...)
CRI	80
Control	DMX512, ON/OFF
Segment	1(W), 8/10(RGB)

Source Life	50,000 h
Housing	High strength aluminum alloy
Cover	Acrylic
Weight	2.5Kg
Working Temperature	-40°C to 50°C
Storage Temperature	-40°C to 70°C
Protection Rating	IP66
Efficiency flux	20LM/W(White), 10LM/W(RGB)
Beam Angle	≥110°

Host Controller	EXC-5200
Slave Controller	EXC-2905T1
Signal Cable	EXC-LED outdoor special cable

Light Intensity Distribution

Light Intensity Chart	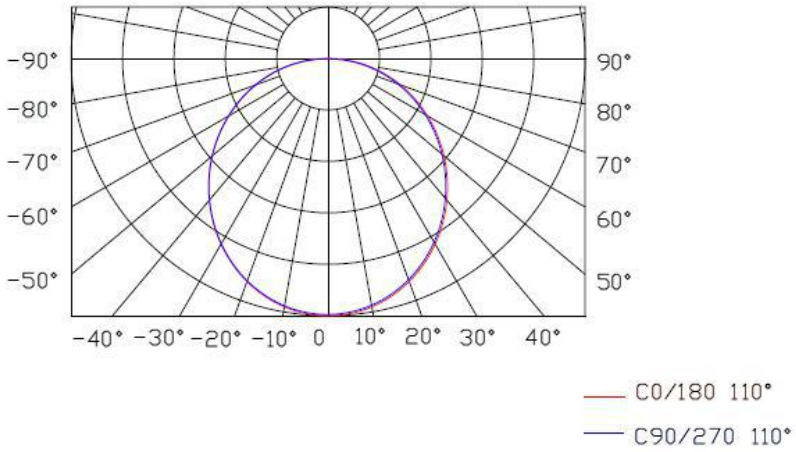

Physical Dimension

Unit：mm

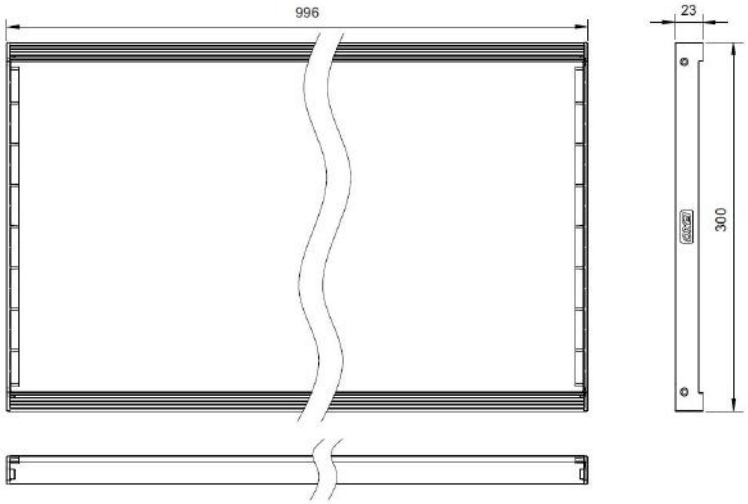

Installation Diagram

Facade installation

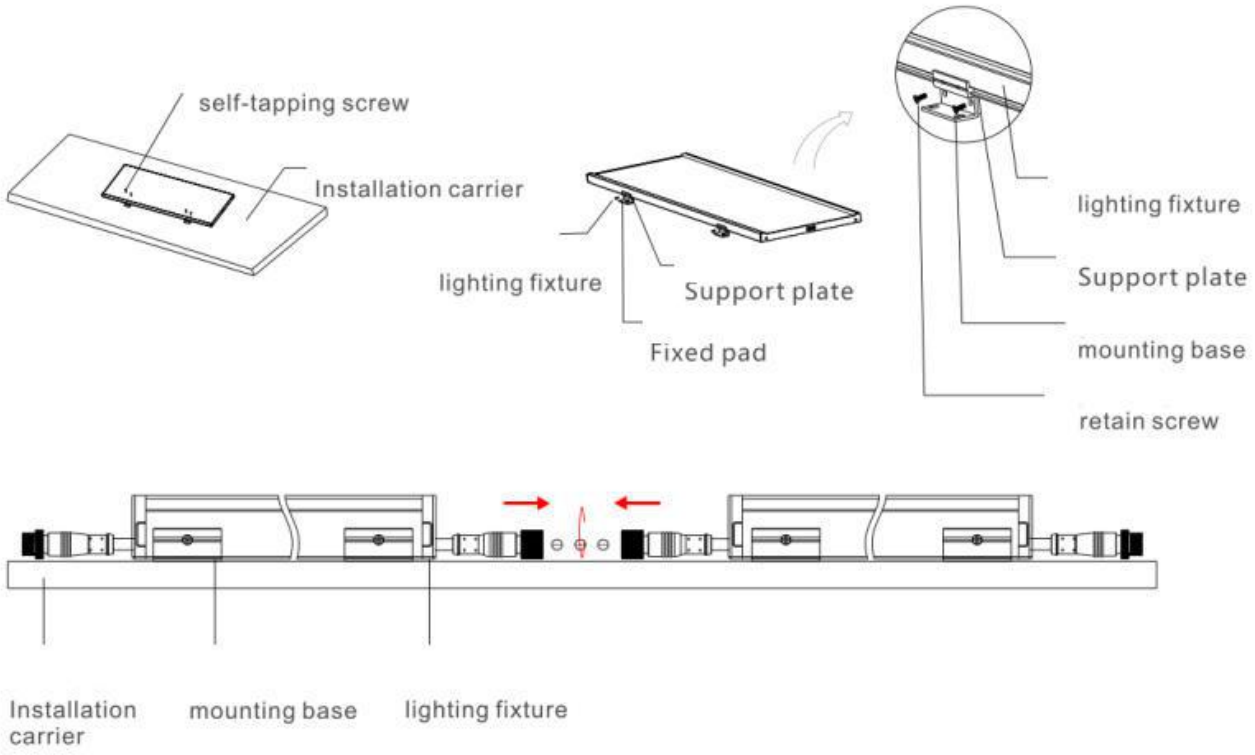

System connection diagram：

1、Host controller should connect with slave controller. Working voltage for controllers are AC220V.

2、On-line main controller should connect with slave controller, on-line main controller and sub controller working voltage are AC220V.

3、 each sub-controller with 8 ports, with each port 512 pixels, supporting data converter, supports 100 meters ultra-long haul transmission.

4、The CAT-5 e. cable distance should be within 100 meters between host controller and slave controller, between slave controllers and switch, etc.

Offline Controlling System Diagram

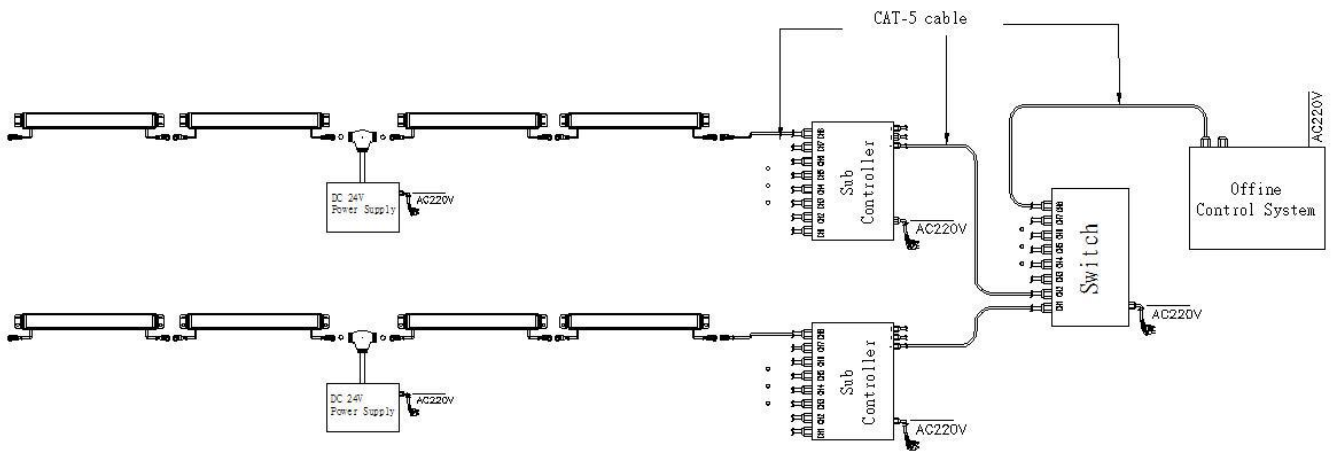

Online Controlling System Diagram

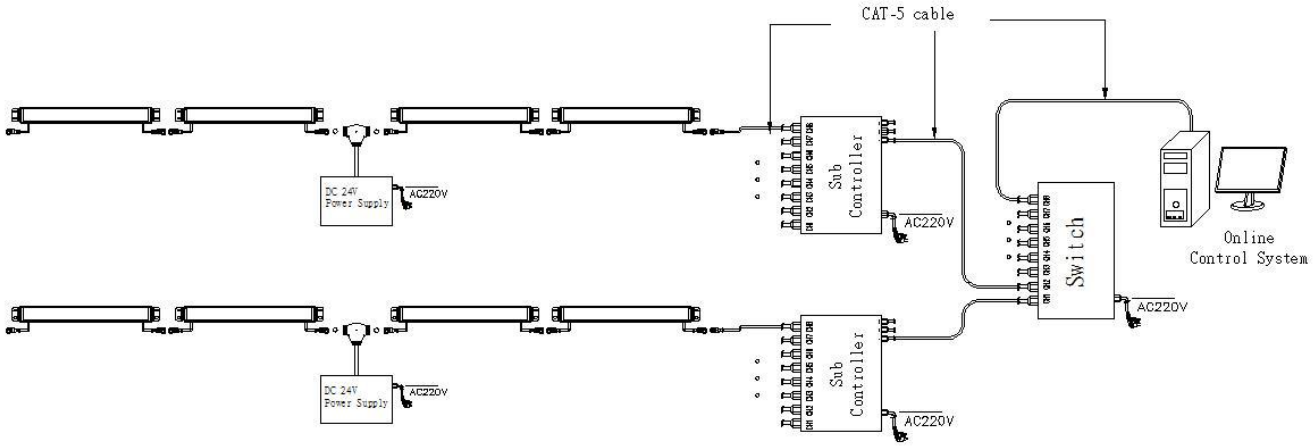

Accessories :

1: Female and Male Connector(Connect to first dot light for signal transmission)

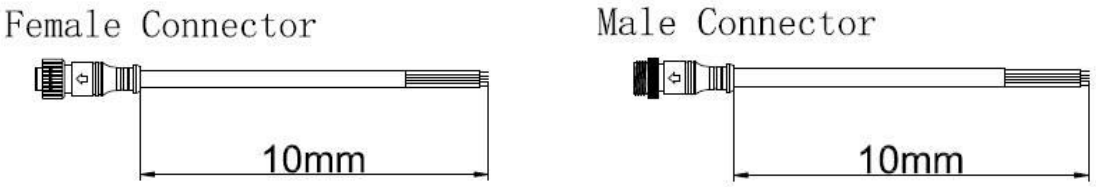

2: Y Shape Connector(For power Distribution)

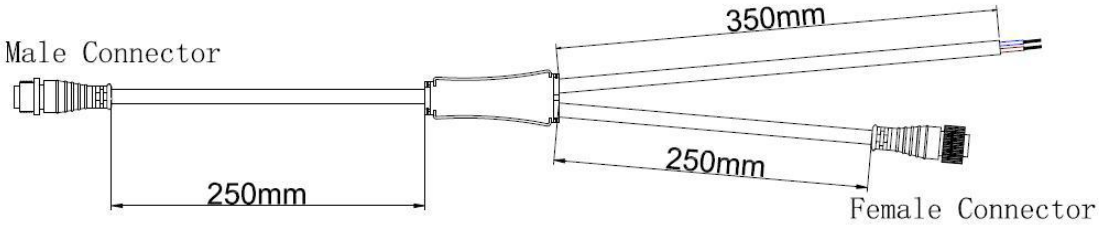

3: Interconnection Cable(1.3M,3M,5M is standard length)



4: End Cap

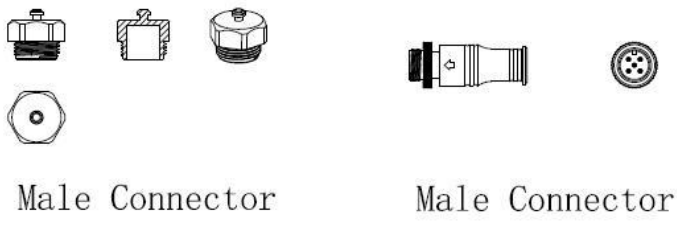

深圳爱克莱特科技股份有限公司
Shenzhen EXC-LED Technology Co., Ltd
地址：中国深圳市宝安区松岗街道松岗大道11号健仓科技园
Add: Jiancang Tech Park,Songgang Blvd. No.11,Songgang St.,Baoan,Shenzhen,China
Http://www.exc-led.com E-mail: exc@exc-led.com Tel: 4008-777-189