EXC-U30NAB0 LED Linear light

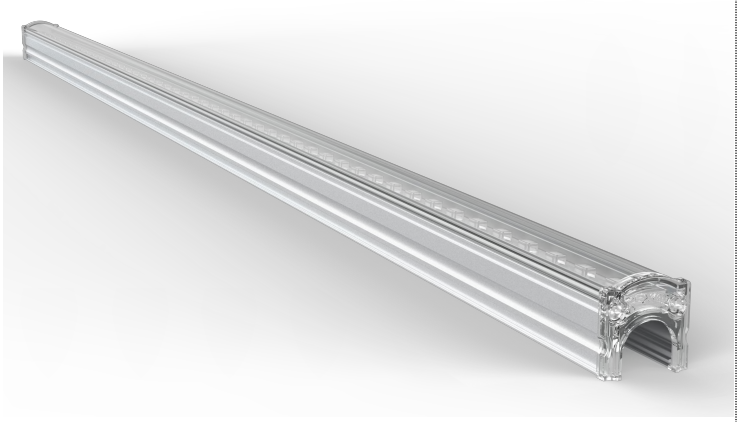

Application Environment：
Indoor
Outdoor

Description

EXC-U30NAB0 full-color series consists of full-color SMD strip lights equipped with an ultra-narrow aluminum-profile housing and specially designed by EXC for outdoor landscape lighting. They are only 28mm wide. Each strip includes 8 pixels, and each pixel can realize 256 grades gray scale changing; featuring simple and reliable installation, they can be used for extra-large area display of building facades, contour shaping, interior and exterior surface decoration lighting, and small-range wall washing.

Features

- The newest generation technology: DMX512 parallel bus design
- Full-sealed filling waterproof design by German imported glue
- Aluminum alloy lamp body with low thermal resistance path heat dissipation design
- Outdoor lightning protection and electrostatic discharge (ESD) protection design
- Certifications including CCC, ETL and CE

Basic Specifications

Color Range	RGB/RGBW/W
Working Voltage	DC 24V
Max. Power Consumption	9W/12W/15W/18W
Light Source	36/48/60 pcs LEDs
LED chip Brand	Optional(Cree, OSRAM, Lumileds, Epistar, etc...)
CRI	80
Control	DMX512, ON/OFF
Segment	1/4/5/6/8/10
Source Life	50,000 h
Housing	High strength aluminum alloy
Cover	PC(Transparent, Opal)

Weight	0.71Kg
Working Temperature	-20°C to 50°C
Storage Temperature	-40°C to 70°C
Protection Rating	IP66
Efficiency flux	50LM/W(White), 25LM/W(RGB), 35LM/W(RGBW)， milky diffuser(decrease 30%-50%
Beam Angle	≥110°

Host Controller	EXC-5200
Slave Controller	EXC-2905T1
Signal Cable	EXC-LED outdoor special cable

Light Intensity Distribution

Light Intensity Chart

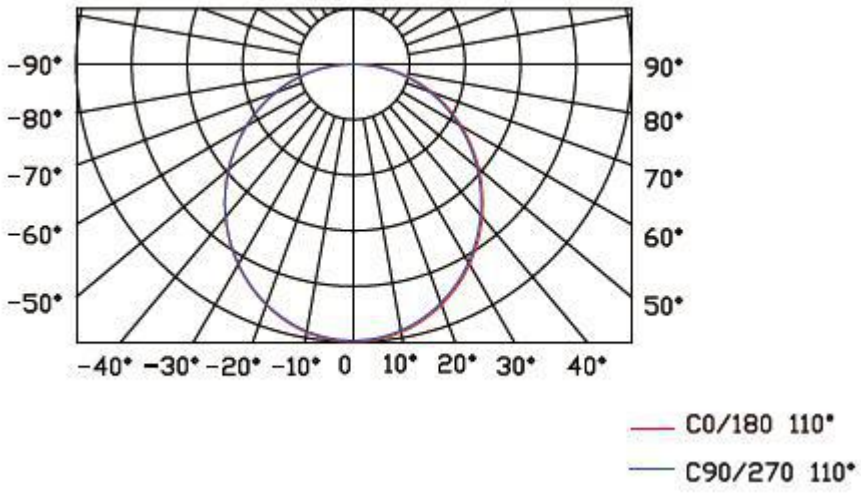

Physical Dimension

Unit：mm

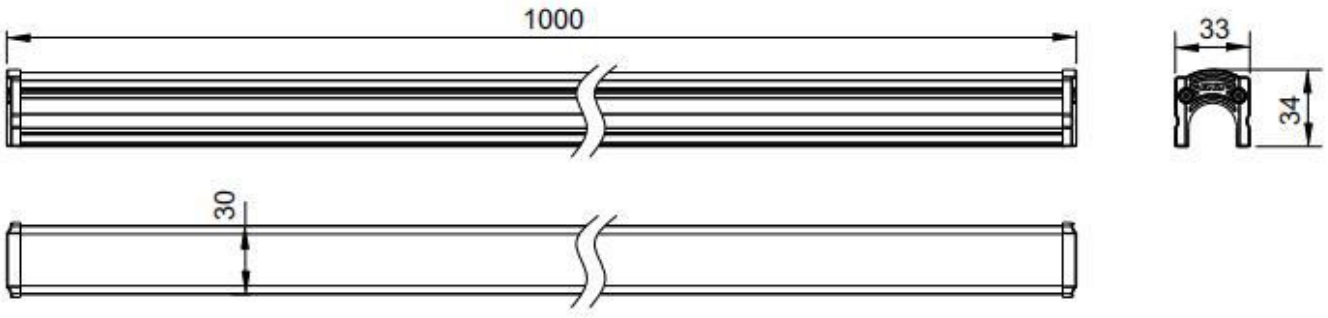

EXC-U30NAB0

Installation Diagram

1、 Facade installation

1. Fix the elastic buckle on the mounting carrier with screws.

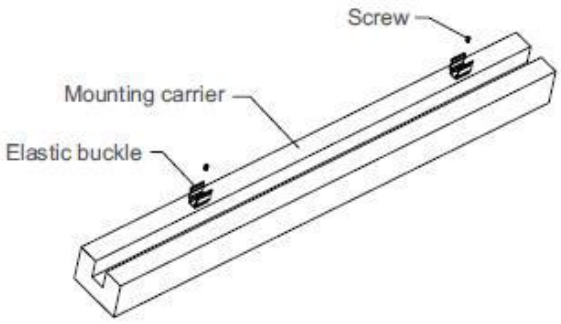

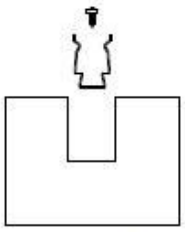

Schematic diagram of section

2. Install the lamp onto the elastic bracket, and fix the lamp with the elastic buckle.

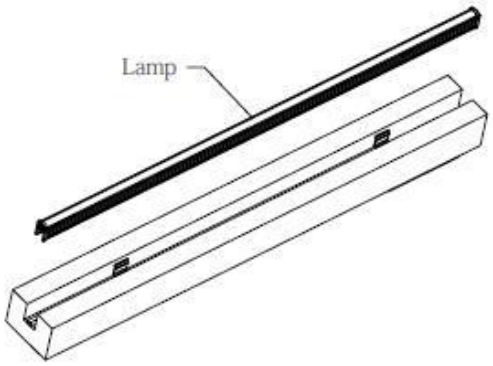

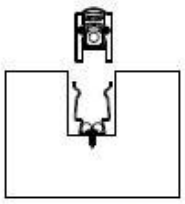

Schematic diagram of section

3. Complete the effect diagram of installation.

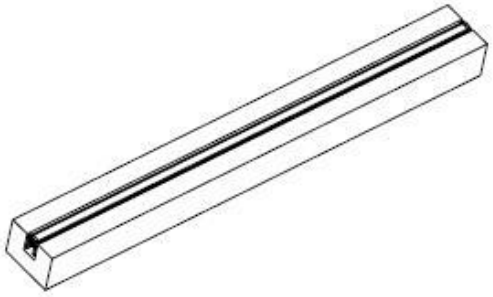

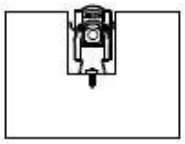

Schematic diagram of section

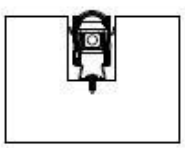

Remove one end cap
Schematic Diagram of Section

1. Use ST4 self-tapping screws to fix the mounting seat to the position of the mounting carrier as shown in the figure, with the specific spacing to be required by the lamp length.

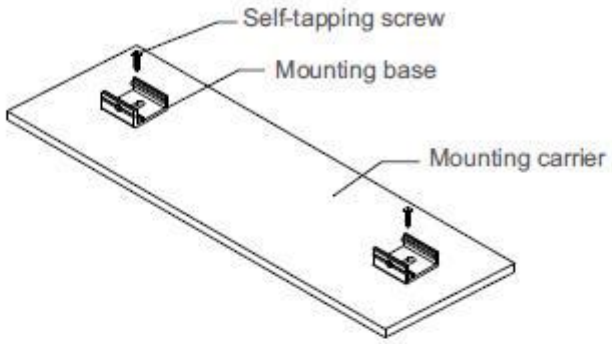

2. Clamp the lamp on the mounting seat, and then use M4 screws to lock the lamp through the mounting seat. Secure the installation.

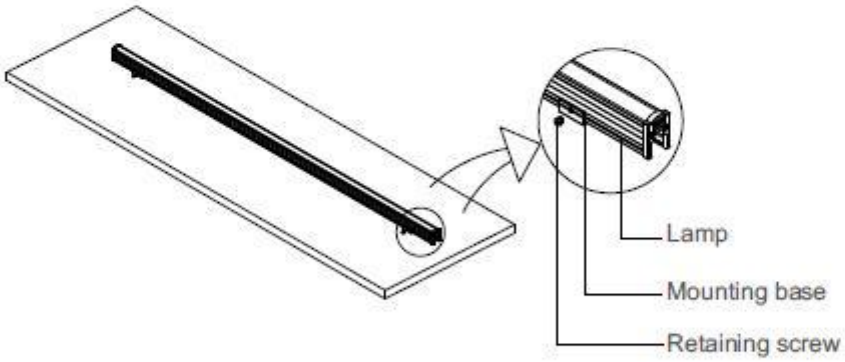

3. Finally, connect the male and female connectors of the waterproof joint line through threads as shown in the figure, and secure the installation.

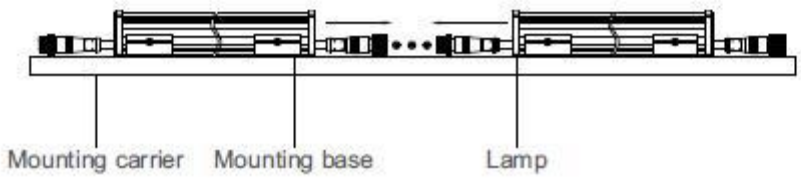

System connection diagram：

1、Host controller should connect with slave controller. Working voltage for controllers are AC220V.

2、On-line main controller should connect with slave controller, on-line main controller and sub controller working voltage are AC220V.

3、 each sub-controller with 8 ports, with each port 512 pixels, supporting data converter, supports 100 meters ultra-long haul transmission.

4、The CAT-5 e. cable distance should be within 100 meters between host controller and slave controller, between slave controllers and switch, etc.

Offline Controlling System Diagram

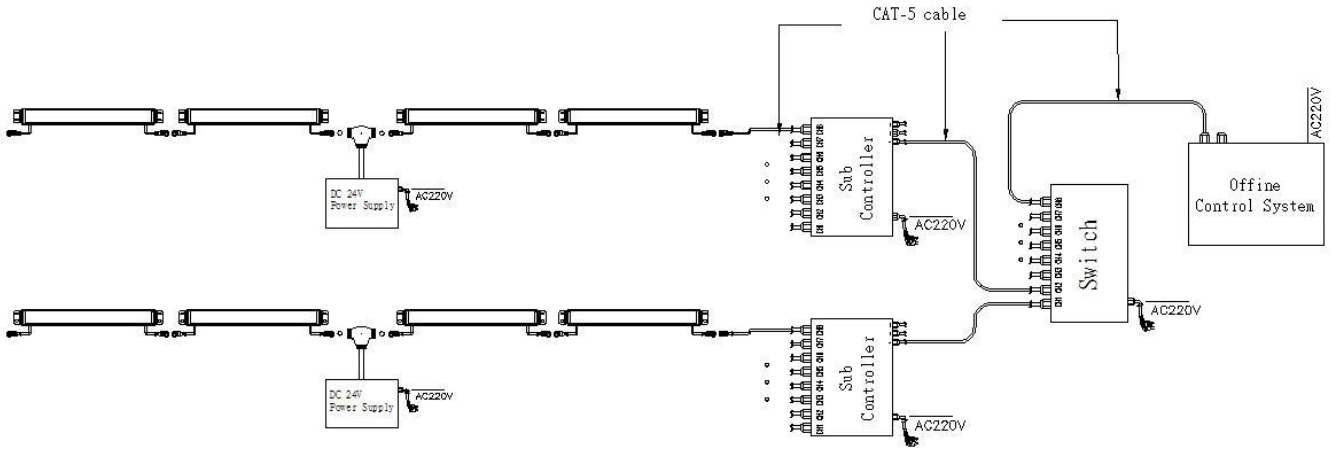

Online Controlling System Diagram

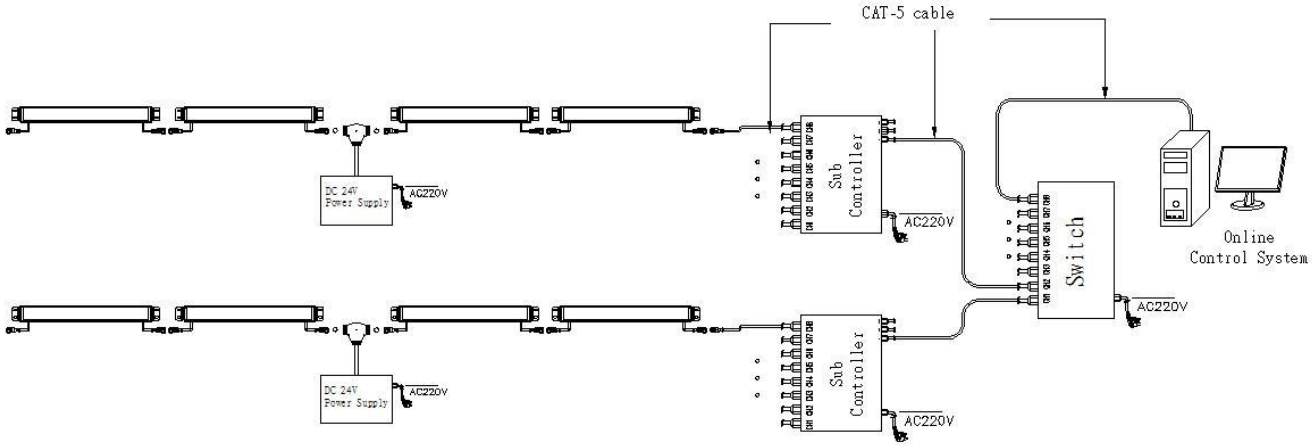

Accessories :

1: Female and Male Connector(Connect to first dot light for signal transmission)

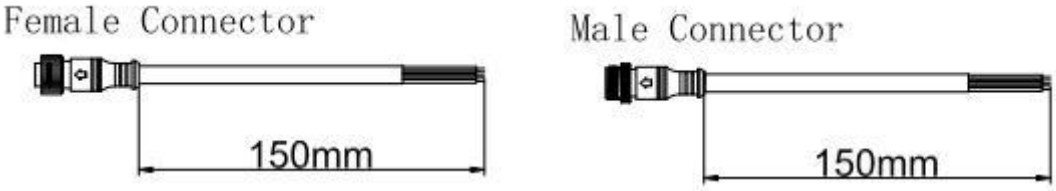

2: Y Shape Connector(For power Distribution)

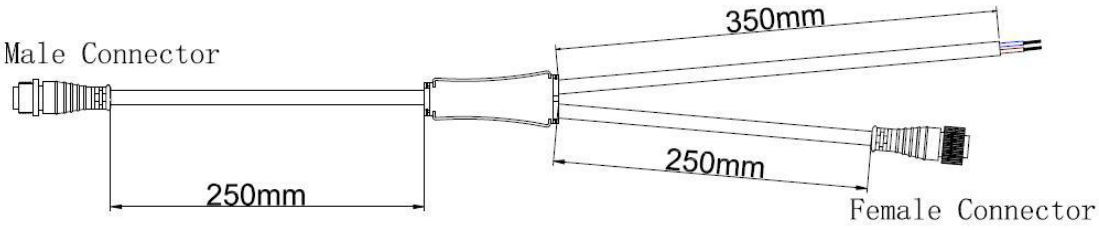

3: Interconnection Cable(1.3M,3M,5M is standard length)



4: End Cap

