EXC-W42BBL Multi-pixel LED Wall Washer



Application Environment：
Indoor
Outdoor

Description

EXC-W42BBL full color series consists of strip-shaped small-power wall washer lights with high-strength aluminum alloy housing specially designed by EXC for outdoor landscape lighting. It could be used for illumination in specific areas or landscape wash lighting, applicable on building facades, bridges, stages, etc. There are many options for lamp length specifications available.

Features

- Professional comb convection heat dissipation design
- Unique waterproof and breathable design
- Low thermal resistance path heat dissipation design
- Outdoor lightning protection and electrostatic discharge (ESD) protection design
- Projection distance: 1-3m

Basic Specifications	
Color Range	W(2700K-6500K)
Light Source	18/24pcs LEDs
Working Voltage	DC 24V
Max. Power Consumption	18/24W
Control	DMX512
Segment	1/2/3/4
Grey Scale	8/16BIT
Source Life	50,000 h
RDM	Optional
LED chip Brand	Optional(Cree, OSRAM, Lumileds, Epistar, etc...)
Housing	High Strength Aluminum
Cover	PC
Weight	1.61KG
Working Temperature	-40°C to 50°C

Storage Temperature	-40°C to 70°C
Protection Rating	IP66
Efficiency flux	≥70LM/W(White),≥45LM/W(RGBW),≥30LM/W(RGB)
Beam Angle	15*25° /15*55° /15° /20° /30° /45° /60° /20*40° /15° /80° /10*60°

Host Controller	EXC-5200
Slave Controller	EXC-2905T1
Signal Cable	EXC-LED outdoor special cable

Light Intensity Distribution

Light Intensity Chart

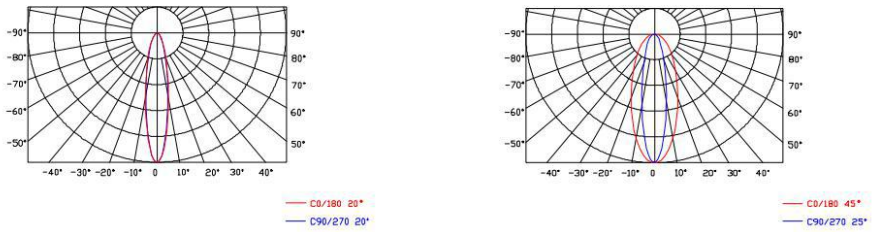

Physical Dimension

Unit：mm

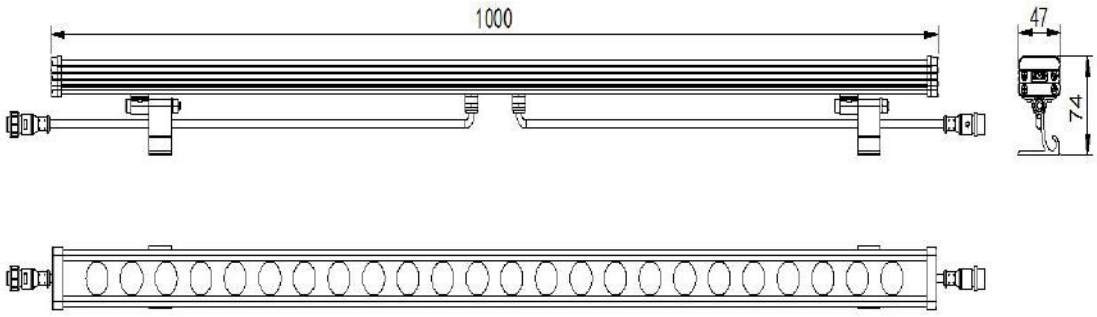

Installation Diagram

Use M6 expansion screws to fix the mounting seat to the required position as shown in the figure.
The specific spacing shall be based on the length of lights.

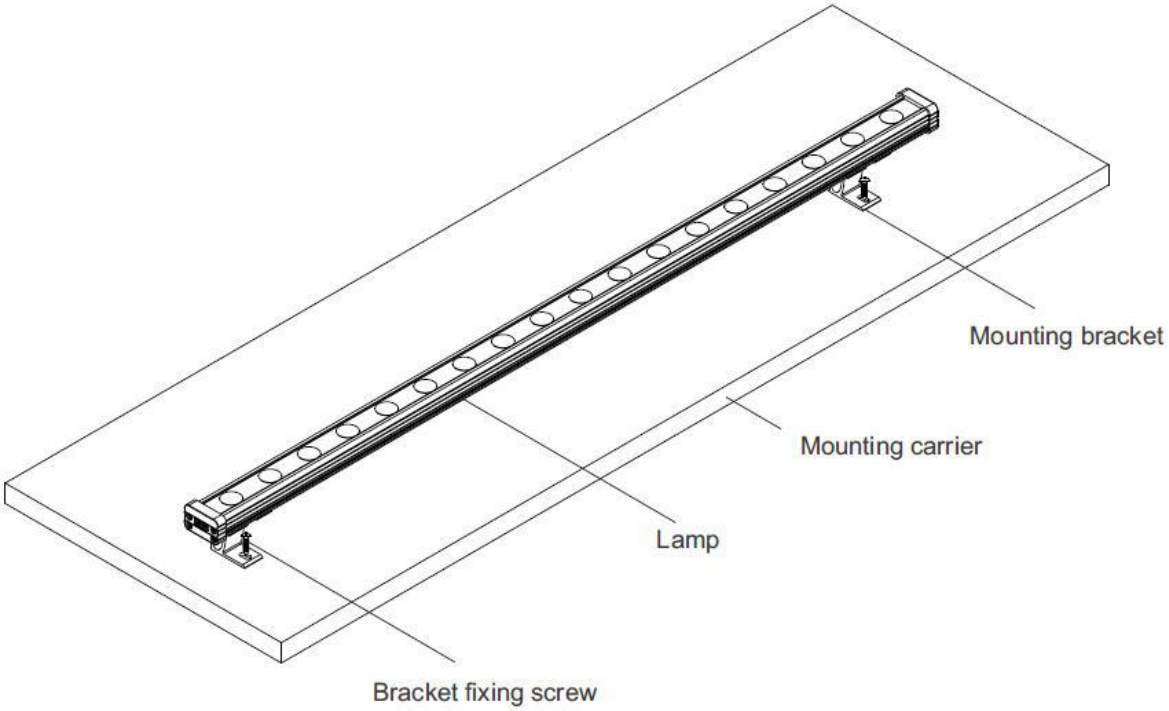

System connection diagram：

1、Host controller should connect with slave controller. Working voltage for controllers are AC220V.

2、On-line main controller should connect with slave controller, on-line main controller and sub controller working voltage are AC220V.

3、each sub-controller with 8 ports, with each port 512 pixels, supporting data converter, supports 100 meters ultra-long haul transmission.

4、The CAT-5 e. cable distance should be within 100 meters between host controller and slave controller, between slave controllers and switch, etc.

Offline Controlling System Diagram

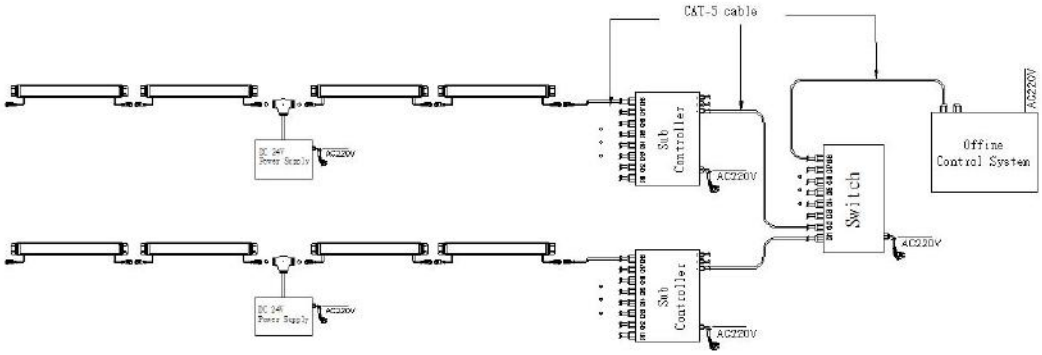

Online Controlling System Diagram

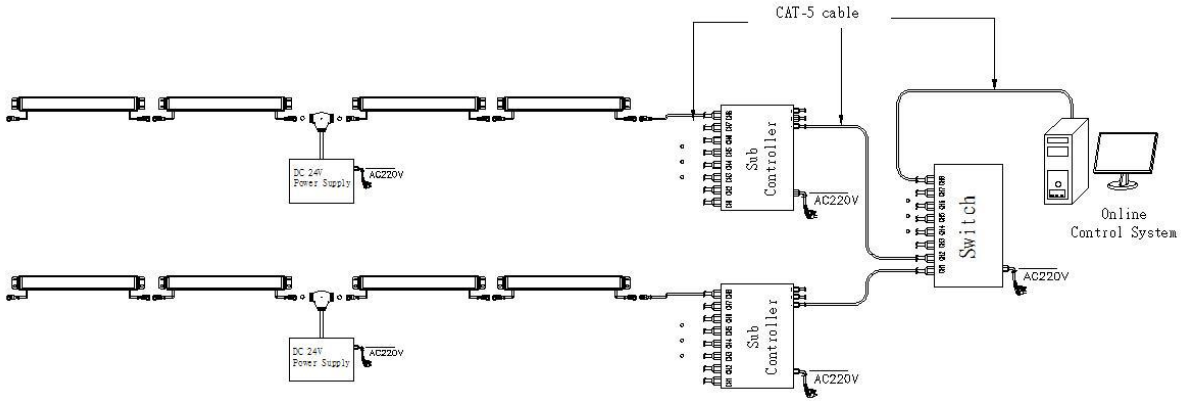

Accessories :

1: Female and Male Connector(Connect to first dot light for signal transmission)

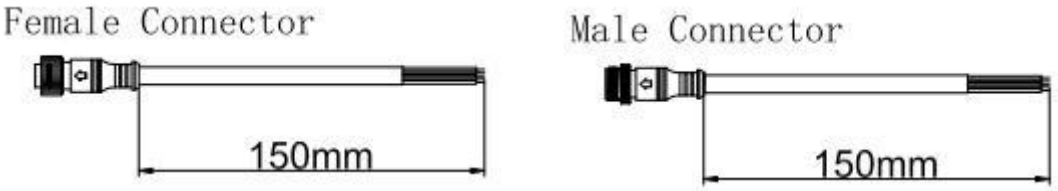

2: Y Shape Connector(For power Distribution)

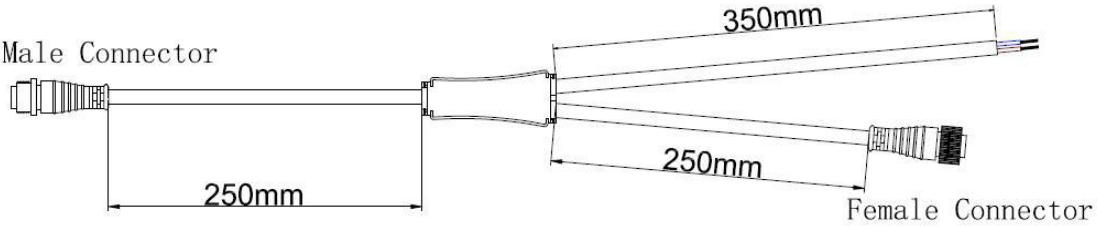

3: Interconnection Cable(1.3M,3M,5M is standard length)



4: End Cap

