## EXC-W50FRL Multi-pixel LED Wall Washer

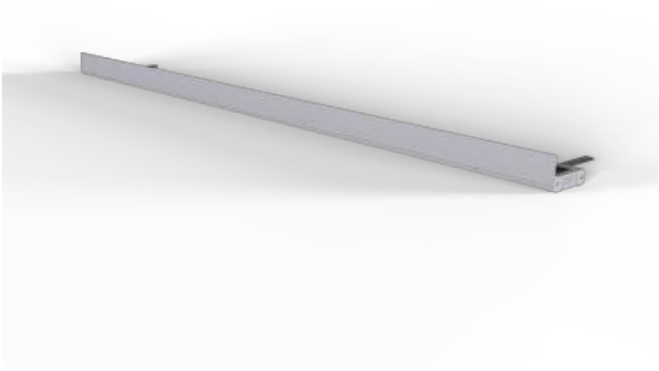

Application Environment：
Indoor
Outdoor

### Description

**EXC-W50FRL full color series** consists of strip-shaped small-power wall washer lights with high-strength aluminum alloy housing specially designed by EXC for outdoor landscape lighting. It could be used for illumination in specific areas or landscape wash lighting, applicable on building facades, bridges, stages, etc. There are many options for lamp length specifications available.

### Features

- Professional comb convection heat dissipation design
- Unique waterproof and breathable design
- Low thermal resistance path heat dissipation design
- Outdoor lightning protection and electrostatic discharge (ESD) protection design
- Projection distance: 1-3m

| Basic Specifications | |
|---|---|
| Color Range | W(2700K-6500K) |
| Light Source | 36pcs LEDs |
| Working Voltage | DC 24V |
| Max. Power Consumption | 36W |
| Control | DMX512 |
| Segment | 1 |
| Grey Scale | 8/16BIT |
| Source Life | 50,000 h |
| RDM | Optional |
| LED chip Brand | Optional(Cree, OSRAM, Lumileds, Epistar, etc...) |
| Housing | High Strength Aluminum |
| Cover | PC |
| Weight | 1.357KG |
| Working Temperature | -40°C to 50°C |

| | |
|---|---|
| Storage Temperature | -40°C to 70°C |
| Protection Rating | IP66 |
| Efficiency flux | ≥70LM/W(White),≥45LM/W(RGBW),≥30LM/W(RGB) |
| Beam Angle | 20°、25*45°、30°、45°、60° |

| | |
|---|---|
| Host Controller | EXC-5200 |
| Slave Controller | EXC-2905T1 |
| Signal Cable | EXC-LED outdoor special cable |
| **Light Intensity Distribution** | |
| **Light Intensity Chart** | 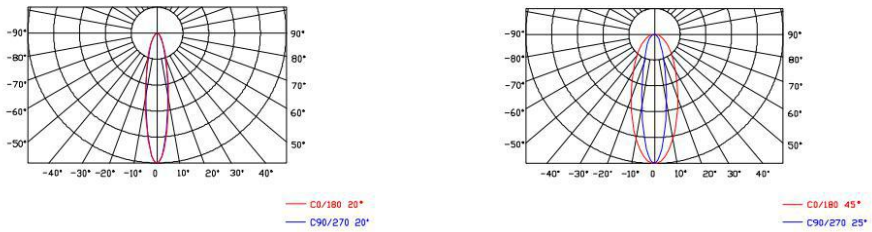 |



**Physical Dimension**

Unit：mm

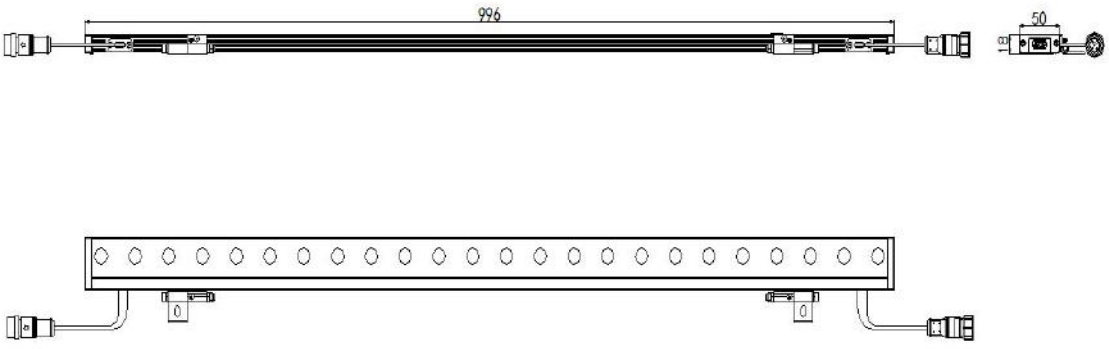


**Installation Diagram**

Use M6 expansion screws to fix the mounting seat to the required position as shown in the figure.
The specific spacing shall be based on the length of lights.

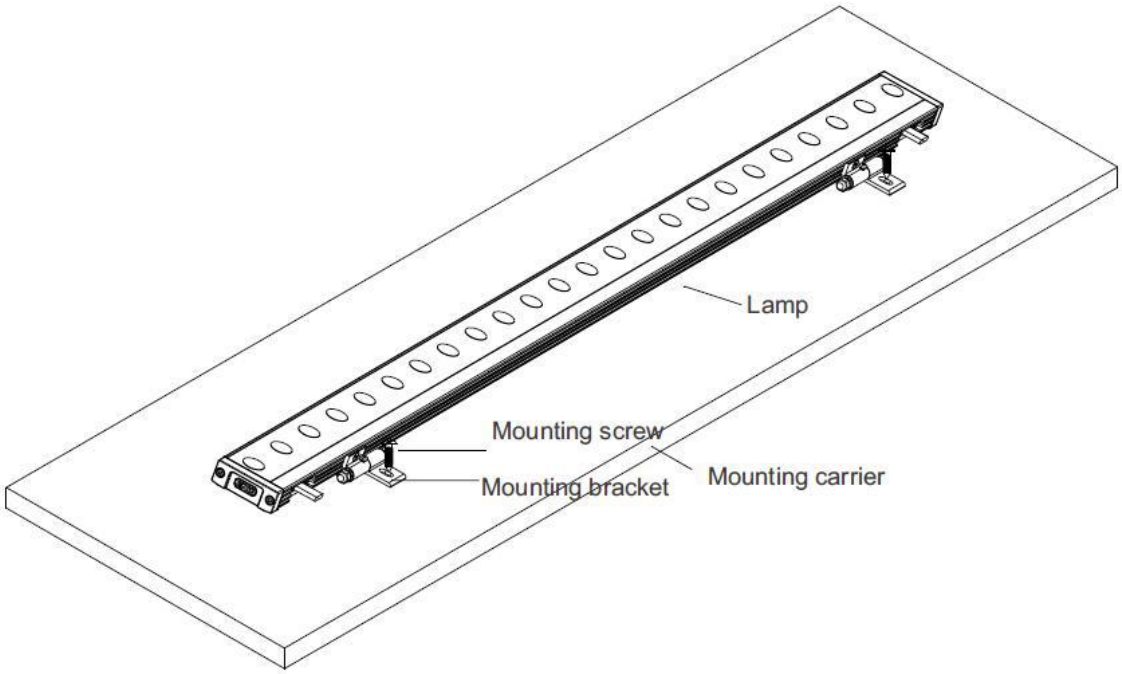

**System connection diagram：**

1、Host controller should connect with slave controller. Working voltage for controllers are AC220V.

2、On-line main controller should connect with slave controller, on-line main controller and sub controller working voltage are AC220V.

3、each sub-controller with 8 ports, with each port 512 pixels, supporting data converter, supports 100 meters ultra-long haul transmission.

4、The CAT-5 e. cable distance should be within 100 meters between host controller and slave controller, between slave controllers and switch, etc.

**Offline Controlling System Diagram**

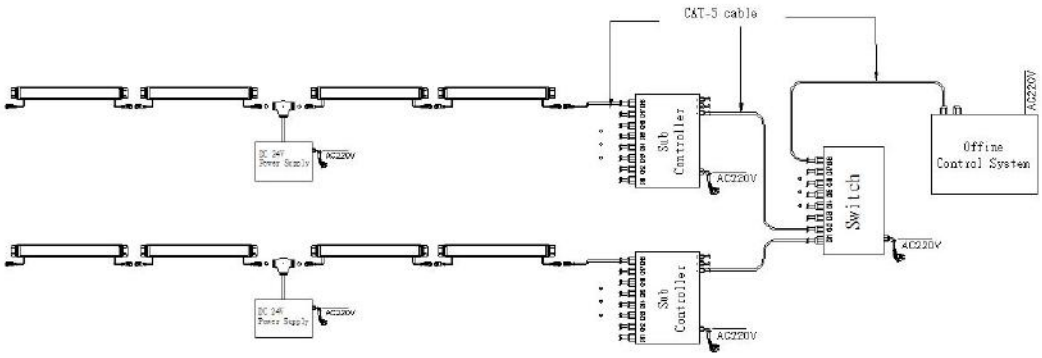


**Online Controlling System Diagram**

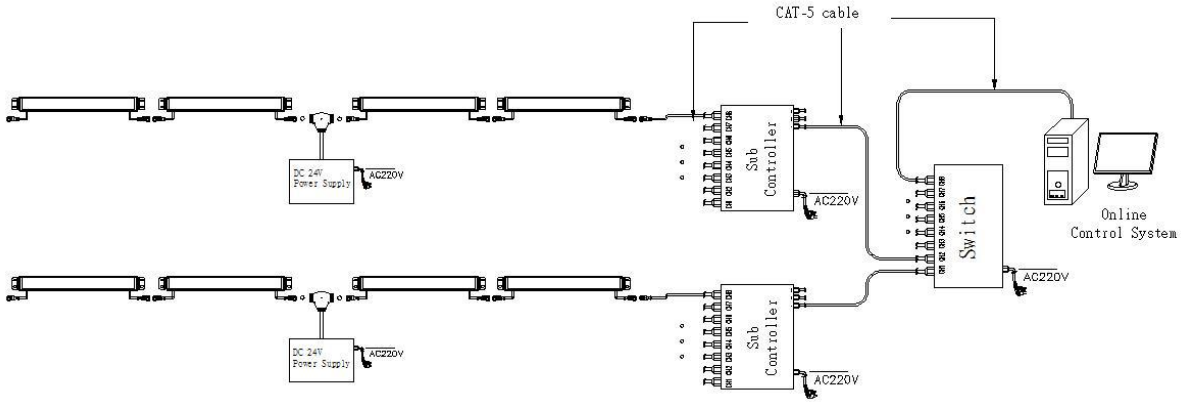

**Accessories :**

**1: Female and Male Connector( Connect to first dot light for signal transmission)**

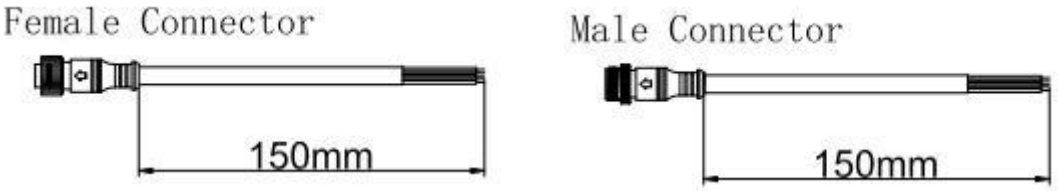


**2: Y Shape Connector(For power Distribution)**

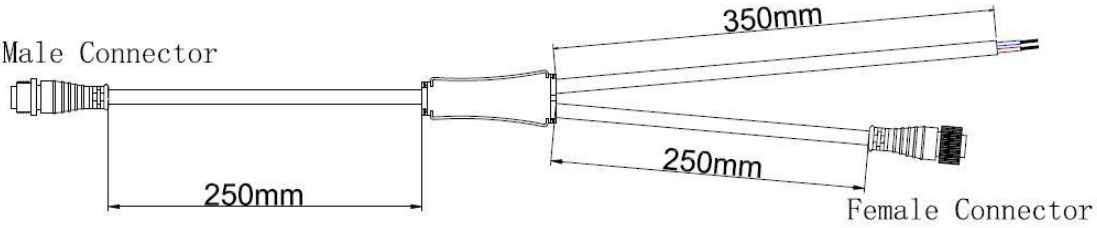


**3: Interconnection Cable(1.3M,3M,5M is standard length)**




**4: End Cap**

