EXC-W55CRH Multi-pixel LED Wall Washer



Application Environment:
Indoor
Outdoor

Description

EXC-W55CRH full color series are high power outdoor landscape LED wall washer with high strength aluminum alloy housing by EXC-LED. EXC-W55CBL can be used for accent lighting or flood lighting, such as building facade, bridge, stage, etc. Customized lighting fixture length available.

Features

- The newest generation technology: DMX512 parallel bus design
- Patented comb-like convection design ensure better heat dissipation
- Low thermal resistance path heat dissipation design
- Design of unique waterproof and ventilation
- Outdoor lighting protection and electrostatic discharge (ESD) protection design
- Projection distance: 1-5m

Basic Specifications	
Color Range	RGBW, RGB, W(2200K-6500K)
Light Source	24/36 pcs LEDs
Working Voltage	AC 220V
Max. Power Consumption	36/48W(white), 54/60W(RGB), 48W(RGBW)
Control	DMX512, ON/OFF
Segment	1
Grey Scale	8bit, 16bit
Source Life	50,000 h
RDM	Optional
LED chip Brand	Optional(Cree, OSRAM, Lumileds, Epistar, etc...)
Housing	High Strength Aluminum
Cover	Tempered glass
Weight	2.6KG
Working Temperature	-40°C to 50°C

Storage Temperature	-40°C to 70°C
Protection Rating	IP66
Efficiency flux	≥70LM/W(White),≥45LM/W(RGBW),≥30LM/W(RGB)
Beam Angle	12°、12*22°、16*50°，and other beam angle available

Host Controller	EXC-5200
Slave Controller	EXC-2905T1
Signal Cable	EXC-LED outdoor special cable
Light Intensity Distribution	
Light Intensity Chart	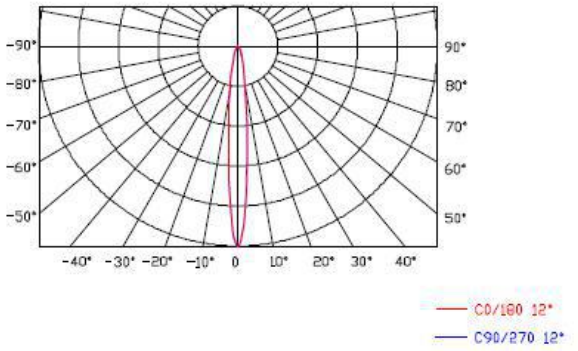 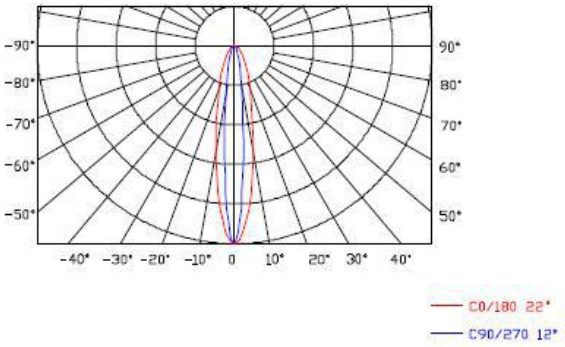 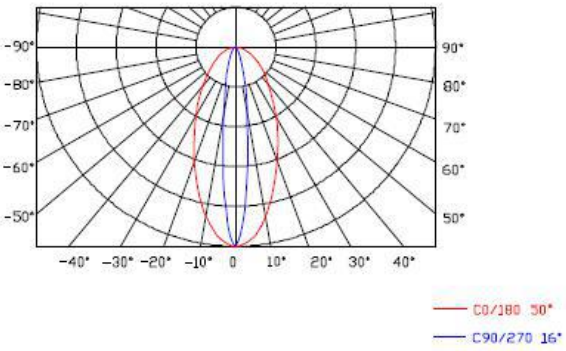

Physical Dimension

Unit：mm

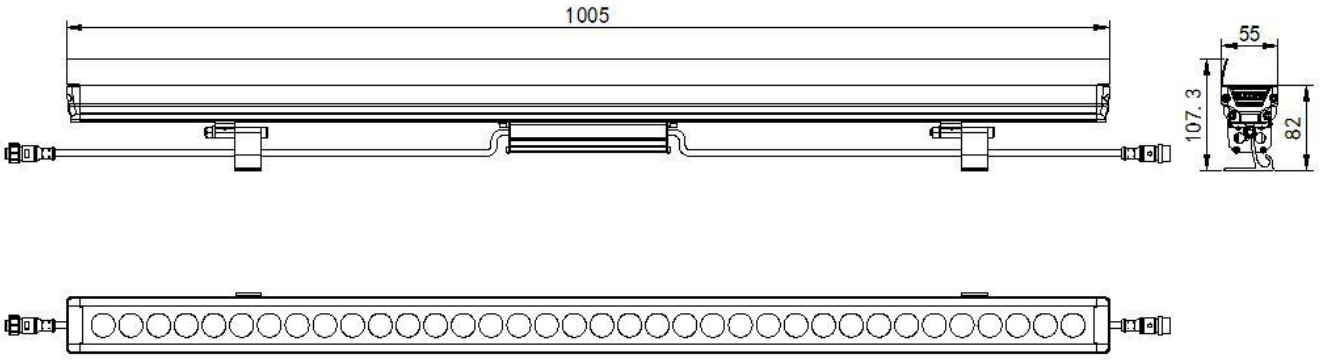

Mounting Accessories 1:

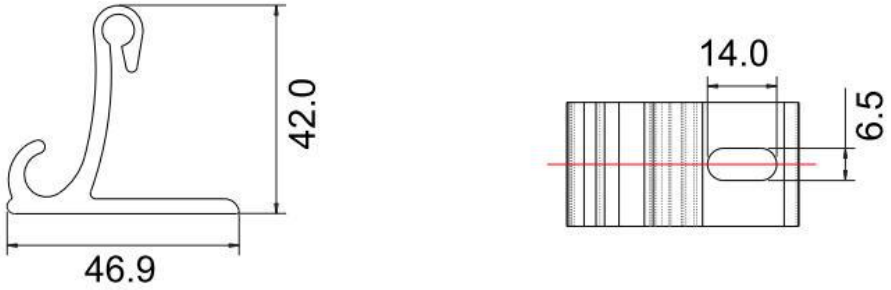

Mounting Accessories 2:

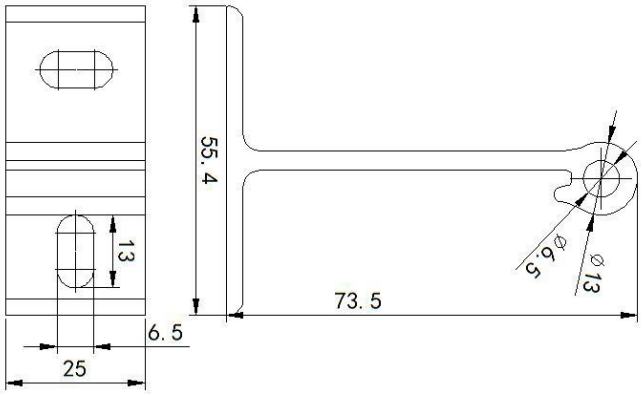

Installation Diagram

Step 1: Use M6 expansion screw and fix the mounting seat to the required position as shown. And specific spacing according to lamp length requirements.

Step2: Fix the screws.

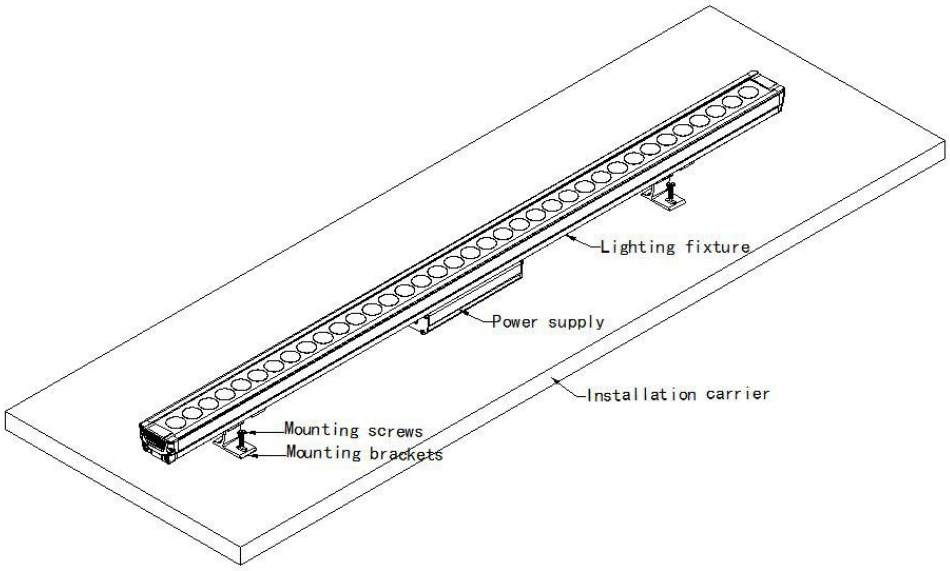

System connection diagram：

1、Host controller should connect with slave controller. Working voltage for controllers are AC220V.

2、On-line main controller should connect with slave controller, on-line main controller and sub controller working voltage are AC220V.

3、each sub-controller with 8 ports, with each port 512 pixels, supporting data converter, supports 100 meters ultra-long haul transmission.

4、The CAT-5 e. cable distance should be within 100 meters between host controller and slave controller, between slave controllers and switch, etc.

Offline Controlling System Diagram

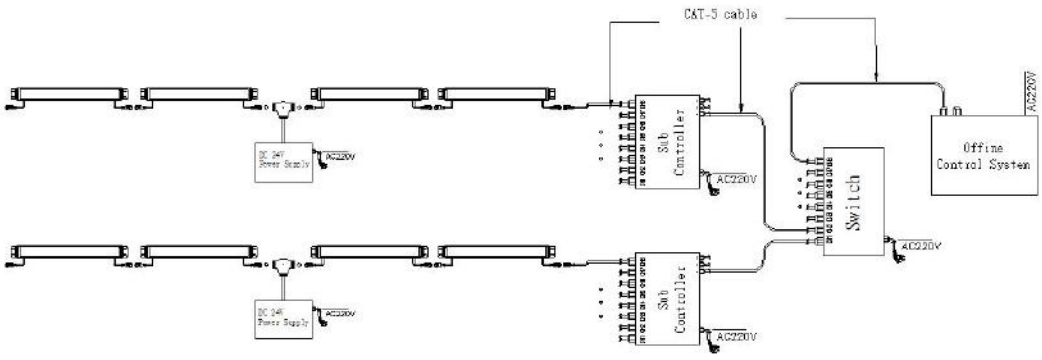

Online Controlling System Diagram

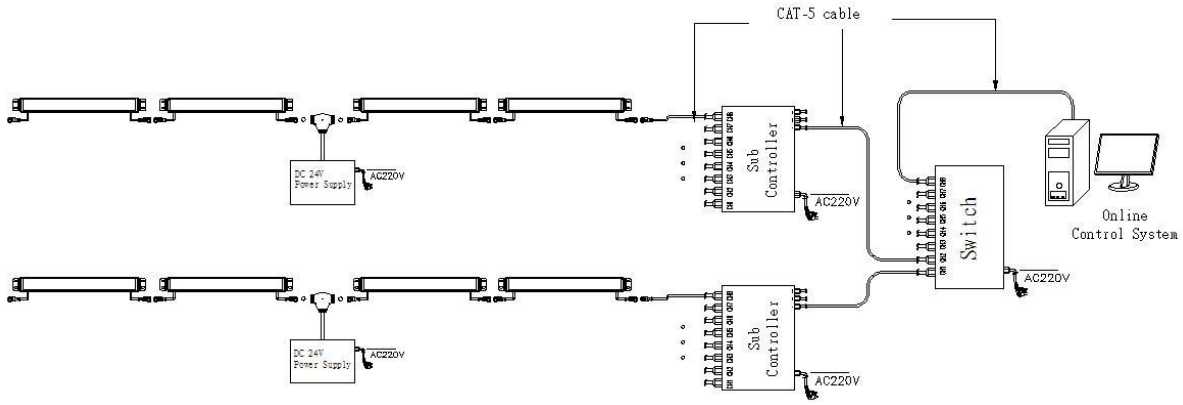

Accessories :

1: Female and Male Connector(Connect to first dot light for signal transmission)

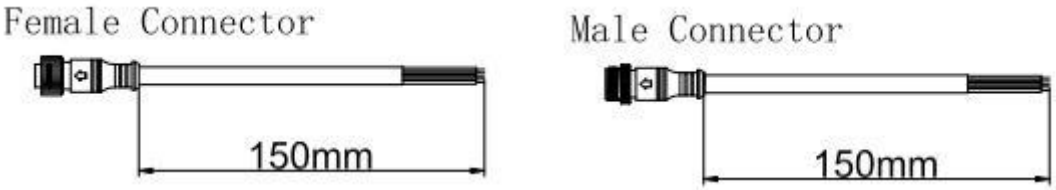

2: Y Shape Connector(For power Distribution)

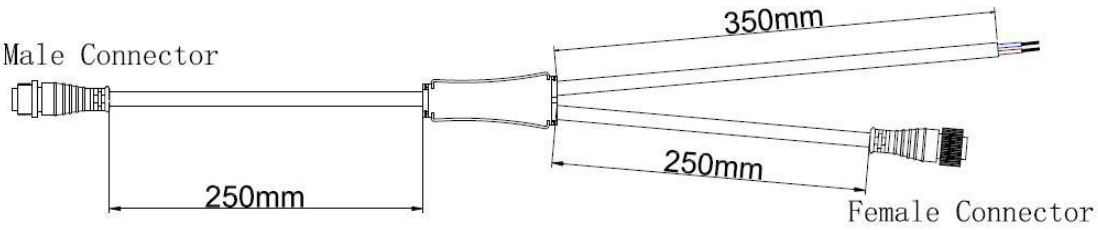

3: Interconnection Cable(1.3M,3M,5M is standard length)



4: End Cap

