WL138DRL LED Comugated light



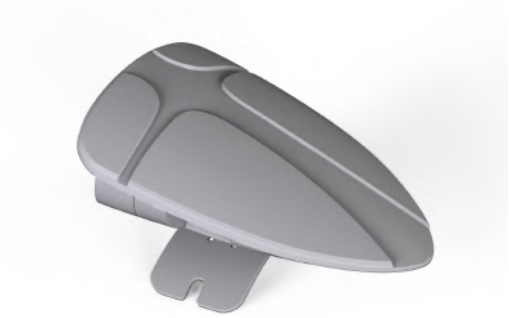

Application Environment:
Indoor
Outdoor

Description:

EXC- WL138DRL series products are a kind of high-strength aluminum alloy shell specially designed for outdoor landscape lighting, which can be used for specific lighting areas or landscape painting, landscape gardening, etc.

Features

- High strength aluminum housing with low thermal resistance heat dissipatch design
- Full-sealed filling waterproof design by German imported glue
- Outdoor lightning protection and electrostatic discharge (ESD) protection design
- LED display level weather resistance, low current design

Basic Specifications	
Color Range	W(2200K-6500K), RGB, RGBW
Working Voltage	DC 24V
Max. Power Consumption	10W/12W(White), 15W(RGB), 12W/15W(RGBW)
Light Source	4(White), 5(W, RGB, RGBW) PCS High Power LEDs
LED chip Brand	Optional(Cree, OSRAM, Lumileds, Epistar, etc...)
CRI	80
Control	DMX512, ON/OFF
Source Life	50,000 h
Housing	High Strength Aluminum
Cover	Tempered glass
Weight	0.72Kg
Dimensions	138mm x 175mm x 72mm (L x W x H, exclude Mounting Bracket)
Installation	Installation with screws
Working Temperature	-40°C to 50°C

Storage Temperature	-40°C to 70°C
Protection Rating	IP66
Luminous Flux	50LM/W(White), 20LM/W(RGB)
Beam Angle	W-3030P7: 10° /15° /20° /30° /45° /60° /80° CREE XP series： 6° /8° /10° /15° /20° /30° /45° /60° /80° 3535: 30° /45° /60° /80° 3030/5050 RGB/RGBW：17° /20° /30° /45° /60°

Host Controller	EXC-5200
Slave Controller	EXC-2905T1
Signal Cable	EXC-LED outdoor special cable
Light Intensity Distribution	
30° Light Intensity Chart	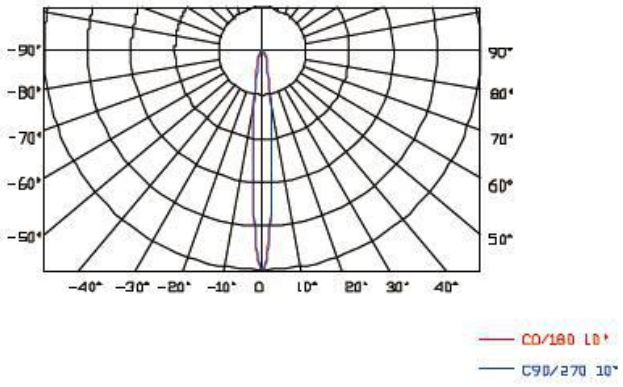 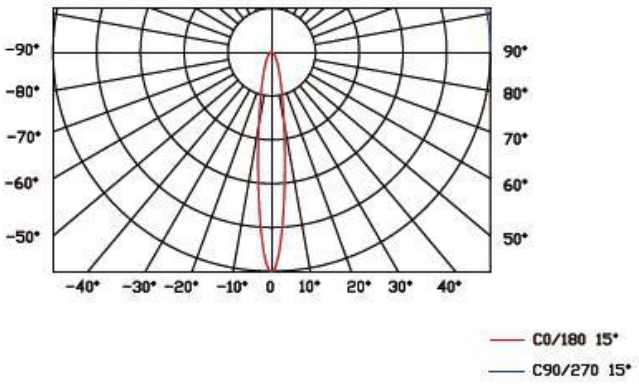 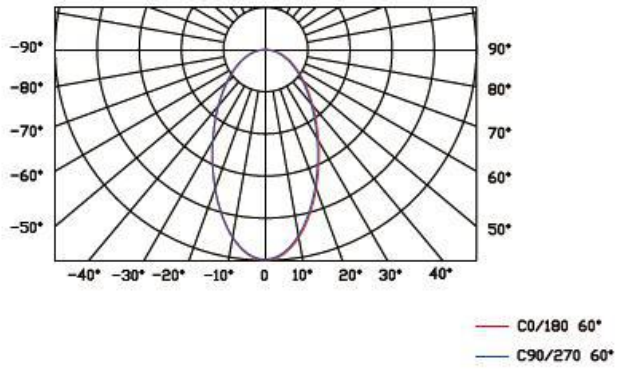

Physical Dimension

Unit：mm

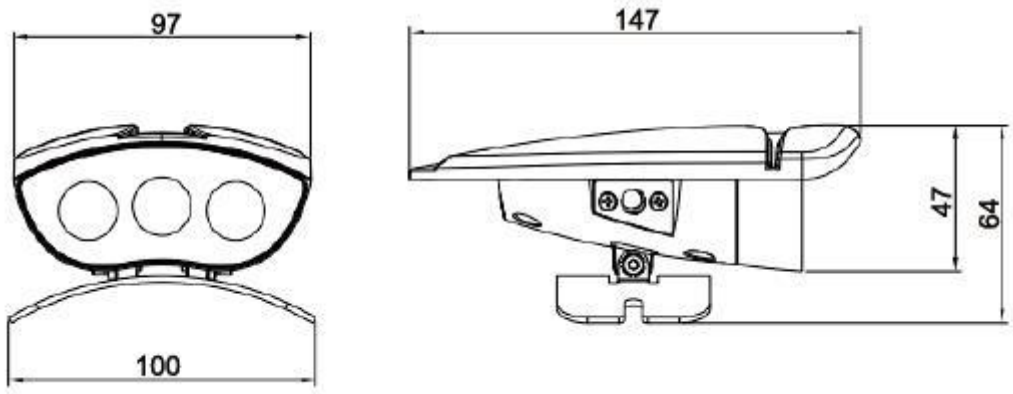

Installation Diagram

Tree holding installation



Ground plug installation



System connection diagram：

1、Host controller should connect with slave controller. Working voltage for controllers are AC220V.

2、On-line main controller should connect with slave controller, on-line main controller and sub controller working voltage are AC220V.

3、each sub-controller with 8 ports, with each port 512 pixels, supporting data converter, supports 100 meters ultra-long haul transmission.

4、The CAT-5 e. cable distance should be within 100 meters between host controller and slave controller, between slave controllers and switch, etc.

Offline Controlling System Diagram

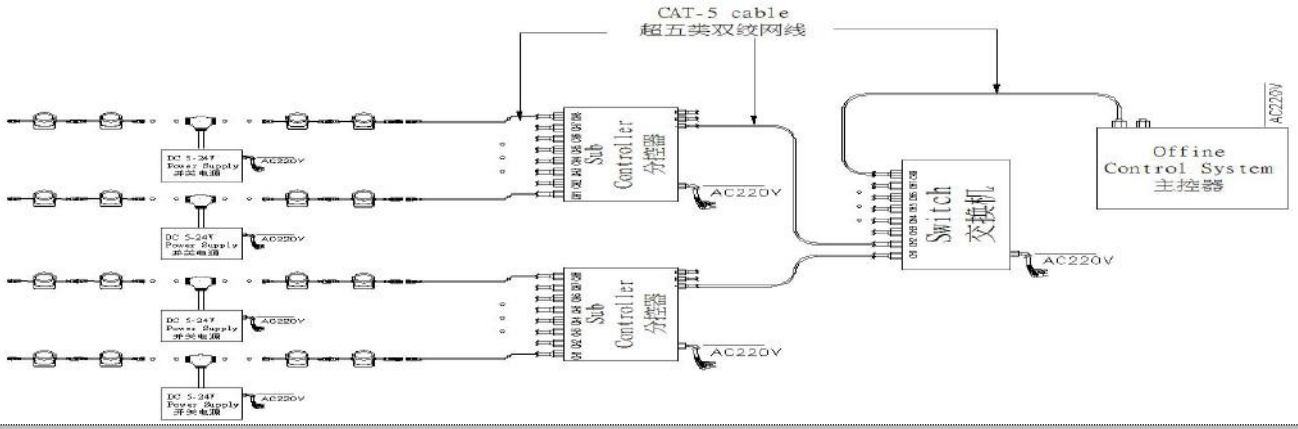

联机系统图：**Online Controlling System Diagram**

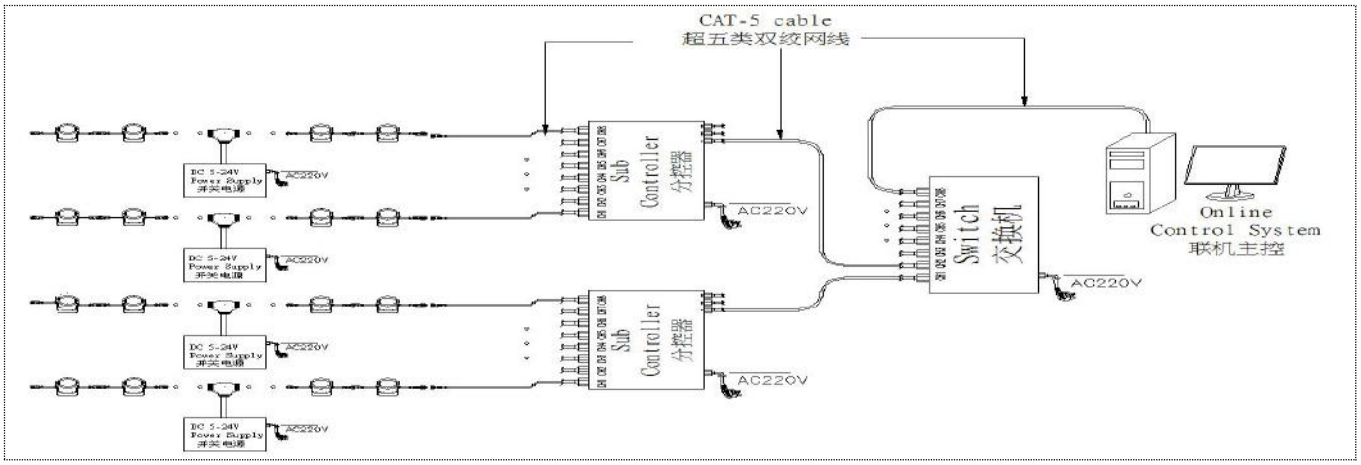
CAT-5 cable
超五类双绞网线
DC 5-24V
Power Supply
开关电源
AC220V
Sub
Controller
分控器
Switch
交换机
Online
Control System
联机主控

Accessories :

1: Female and Male Connector(Connect to first dot light for signal transmission)

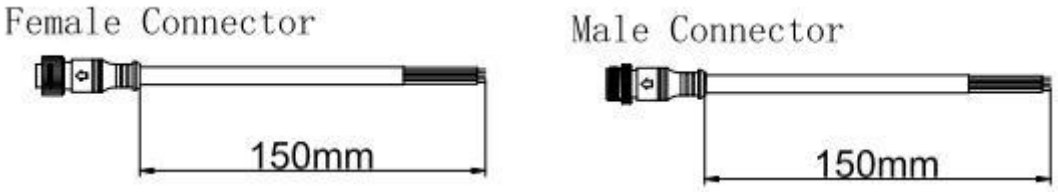

2: Y Shape Connector(For power Distribution)

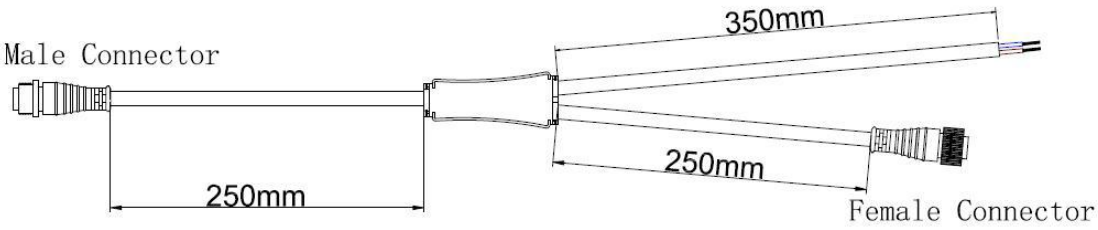

3: Interconnection Cable(1.3M,3M,5M is standard length)



4: End Cap

