WL97DRL LED Comugated light



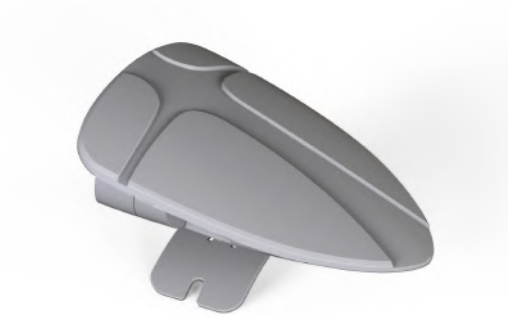

Application Environment:
Indoor
Outdoor

Description:

EXC- WL97DRL series products are a kind of high-strength aluminum alloy shell specially designed for outdoor landscape lighting, which can be used for specific lighting areas or landscape painting, landscape gardening, etc.

Features

- High strength aluminum housing with low thermal resistance heat dissipatch design
- Full-sealed filling waterproof design by German imported glue
- Outdoor lightning protection and electrostatic discharge (ESD) protection design
- LED display level weather resistance, low current design

Basic Specifications	
Color Range	W(2200K-6500K), RGB, RGBW
Working Voltage	DC 24V
Max. Power Consumption	10W/12W(White), 15W(RGB), 12W/15W(RGBW)
Light Source	4(White), 5(W, RGB, RGBW) PCS High Power LEDs
LED chip Brand	Optional(Cree, OSRAM, Lumileds, Epistar, etc...)
CRI	80
Control	DMX512, ON/OFF
Source Life	50,000 h
Housing	High Strength Aluminum
Cover	Tempered glass
Weight	0.54Kg
Dimensions	97mm x 147mm x 64mm (L x W x H, exclude Mounting Bracket)
Installation	Installation with screws
Working Temperature	-40°C to 50°C

Storage Temperature	-40°C to 70°C
Protection Rating	IP66
Luminous Flux	50LM/W(White), 20LM/W(RGB)
Beam Angle	120°

Host Controller	EXC-5200
Slave Controller	EXC-2905T1
Signal Cable	EXC-LED outdoor special cable
Light Intensity Distribution	
30° **Light Intensity Chart**	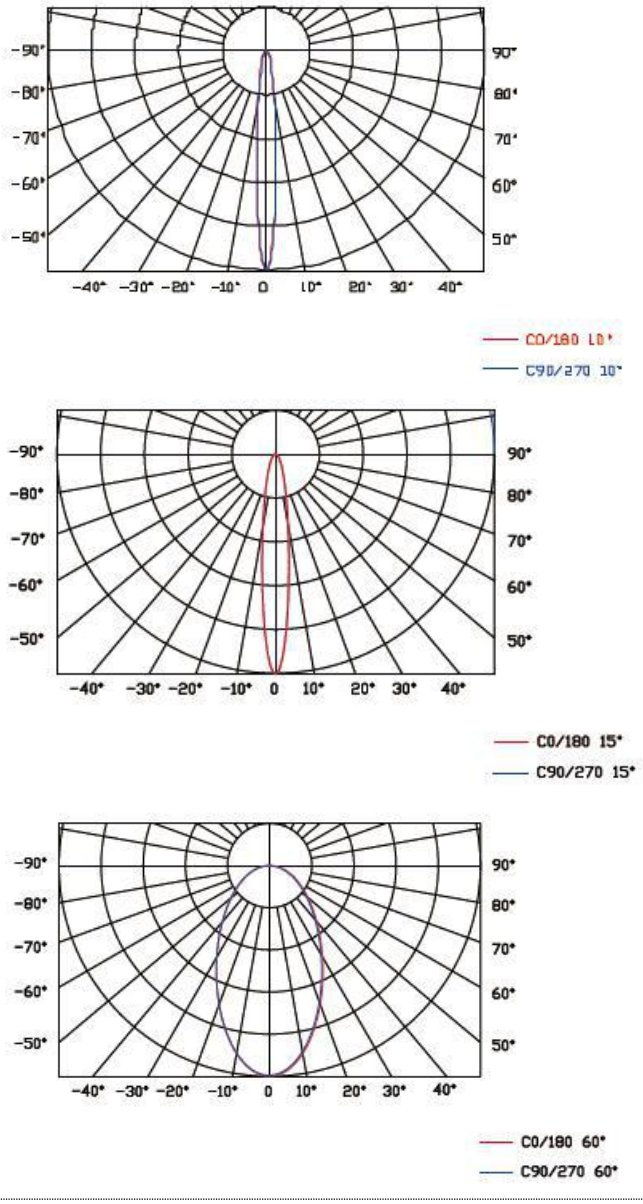

Physical Dimension

Unit：mm

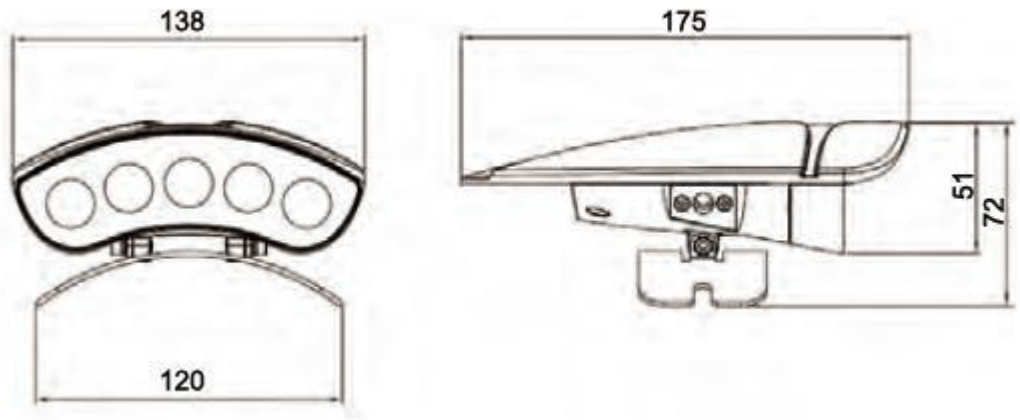

Installation Diagram

Tree holding installation



Ground plug installation



System connection diagram：

1、Host controller should connect with slave controller. Working voltage for controllers are AC220V.

2、On-line main controller should connect with slave controller, on-line main controller and sub controller working voltage are AC220V.

3、each sub-controller with 8 ports, with each port 512 pixels, supporting data converter, supports 100 meters ultra-long haul transmission.

4、The CAT-5 e. cable distance should be within 100 meters between host controller and slave controller, between slave controllers and switch, etc.

Offline Controlling System Diagram

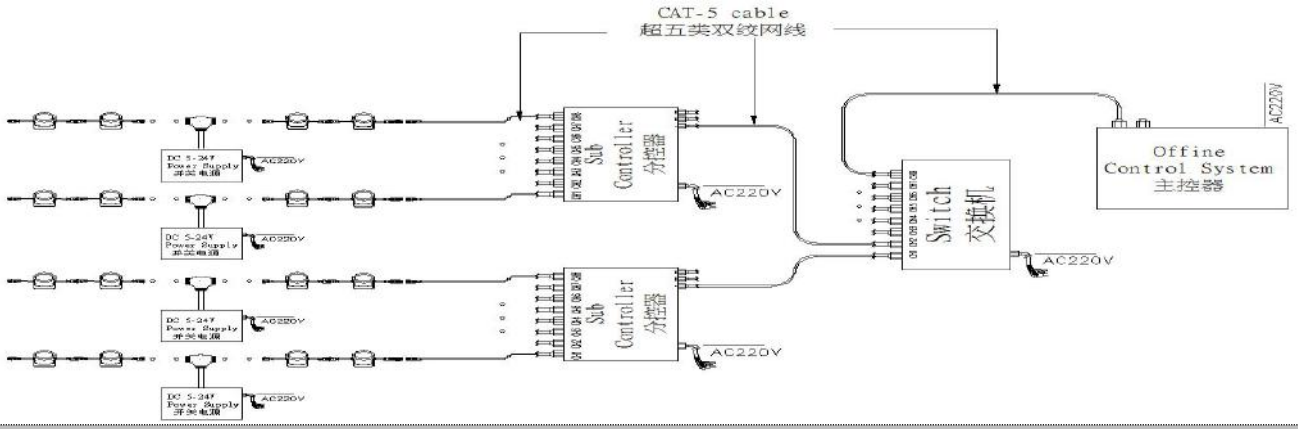

联机系统图：**Online Controlling System Diagram**

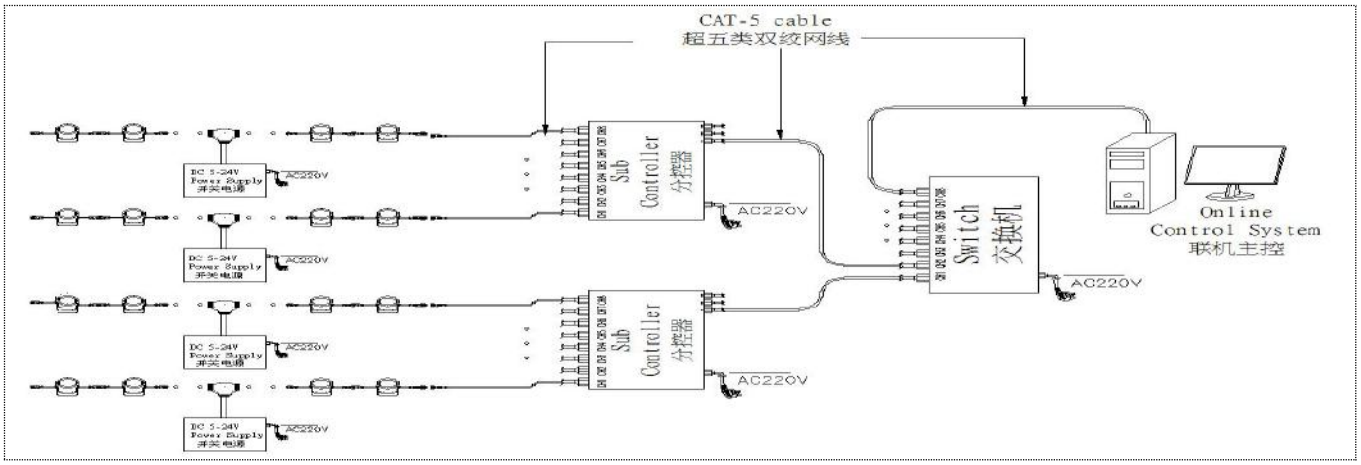
CAT-5 cable
超五类双绞网线
DC 5-24V
Power Supply
开关电源
AC220V
Sub
Controller
分控器
Switch
交换机
Online
Control System
联机主控

Accessories :

1: Female and Male Connector(Connect to first dot light for signal transmission)

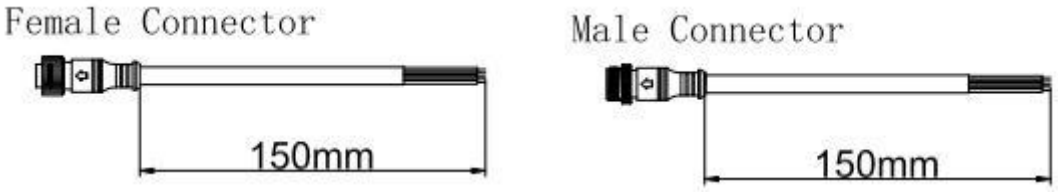

2: Y Shape Connector(For power Distribution)

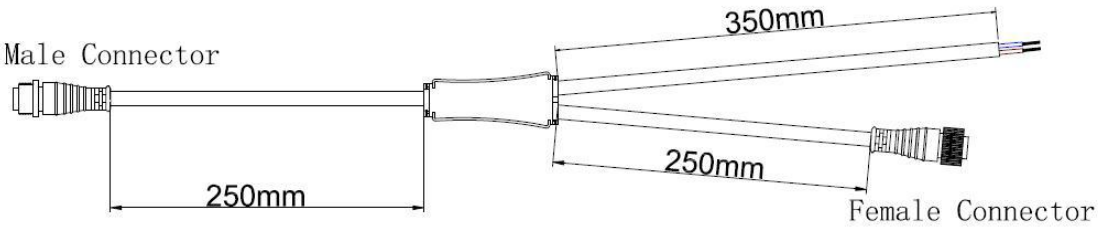

3: Interconnection Cable(1.3M,3M,5M is standard length)



4: End Cap

