IEC IECEE CB SCHEME

**Ref. Certif. No.**

JPTUV-091244

**IEC SYSTEM FOR MUTUAL RECOGNITION OF TEST CERTIFICATES FOR ELECTRICAL EQUIPMENT (IECEE) CB SCHEME**

**SYSTEME CEI D'ACCEPTATION MUTUELLE DE CERTIFICATS D ESSAIS DES EQUIPEMENTS ELECTRIQUES (IECEE) METHODE OC**

# CB TEST CERTIFICATE

# CERTIFICAT D'ESSAI OC

| | |
|---|---|
| Product<br>Produit | Rechargeable Li-ion Cell |
| Name and address of the applicant<br>Nom et adresse du demandeur | ZHEJIANG TIANNENG ENERGY TECHNOLOGY CO.,LTD.<br>No.18 Baoqiao Road,Huaxi Street<br>Changxing County, Huzhou City,Zhejiang Province, P. R. China |
| Name and address of the manufacturer<br>Nom et adresse du fabricant | ZHEJIANG TIANNENG ENERGY TECHNOLOGY CO.,LTD.<br>No.18 Baoqiao Road,Huaxi Street<br>Changxing County, Huzhou City,Zhejiang Province, P. R. China |
| Name and address of the factory<br>Nom et adresse de l'usine | ZHEJIANG TIANNENG ENERGY TECHNOLOGY CO.,LTD.<br>No.18 Baoqiao Road,Huaxi Street<br>Changxing County, Huzhou City,Zhejiang Province, P. R. China |
| Ratings and principal characteristics<br>Valeurs nominales et charactéristiques principales | TNL-ITR18650-P-1300 TNL-ITR18650-P-1500<br>TNL-ITR18650-1800F TNL-ITR18650-2000P<br>TNL-ITR18650-2000F TNL-ITR18650-2200P<br>others refer to the test report. |
| Trademark (if any)<br>Marque de fabrique (si elle existe) | |
| Type of Manufacturer's Testing Laboratories used<br>Type de programme du laboratoire d'essais constructeur | N/A |
| Model / Type Ref.<br>Ref. de type | refer to the test report. |
| Additional information (if necessary may also be reported on page 2)<br>Les informations complémentaires (si nécessaire, peuvent être indiqués sur la 2ème page) | For model differences, refer to the test report. |
| A sample of the product was tested and found to be in conformity with<br>Un échantillon de ce produit a été essayé et a été considéré conforme à la | IEC 62133-2:2017<br>See Test Report for National Differences |
| As shown in the Test Report Ref. No. which forms part of this Certificate<br>Comme indiqué dans le Rapport d'essais numéro de référence qui constitue partie de ce Certificat | 50186274 001 |

This CB Test Certificate is issued by the National Certification Body
Ce Certificat d'essai OC est établi par l'Organisme National de Certification

TÜVRheinland®

TÜV Rheinland Japan Ltd.
Global Technology Assessment Center
4-25-2 Kita-Yamata, Tsuzuki-ku
Yokohama 224-0021 Japan
Phone + 81 45 914-3888
Fax + 81 45 914-3354
Mail: info@jpn.tuv.com
Web: www.tuv.com

Date: 13.11.2018

Signature: Dipl.-Ing. (FH) Fan He

TÜV Rheinland (China) Ltd.
Member of TÜV Rheinland Group

TÜVRheinland®
Precisely Right.

ZHEJIANG TIANNENG ENERGY TECHNOLOGY CO.,LTD.

Date : 13.11.2018
Our ref. : CZY SHG
Your ref.: 154359384

No.18 Baoqiao Road,Huaxi Street
Changxing County
Huzhou City,Zhejiang Province
P. R. China

**Ref : CB Certificate Japan**

Type of Equipment : Rechargeable Li-ion Cell
Model Designation : See Certificate
Certificate No. : JPTUV-091244
Report No. : 50186274 001

Dear Ladies and Gentlemen,

Thank you very much for your interest in our services.

Please find enclosed your certification documents.

We appreciate your support and would like to offer our assistance in the approval of your future products through our extensive range of technical services.

Please feel free to contact us whatever your requirements may be.

With kind regards,

Certification Body

Dipl.-Ing. (FH) Fan He

Enclosure



TÜV Rheinland (China) Ltd.
莱茵检测认证服务（中国）有限公司
Unit 707, AVIC Bldg., No. 10B, Central Road, East 3rd Ring Road, Chaoyang District, Beijing, 100022, P.R.China
北京市朝阳区东三环中路乙10号艾维克大厦707室
邮编：100022
Tel: (8610)6566 6660
Fax: (8610)6566 6667
e-mail: info@bj.chn.tuv.com
Internet: http://www.chn.tuv.com

Test Report issued under the responsibility of:

TÜVRheinland®

# TEST REPORT
# IEC 62133-2
# Secondary cells and batteries containing alkaline or other non-acid electrolytes – Safety requirements for portable sealed secondary cells, and for batteries made from them, for use in portable applications –
# Part 2: Lithium systems

| | |
|---|---|
| **Report Number. ..... :** | **50186274 001** |
| **Date of issue ..... :** | 2018-10-26 |
| **Total number of pages ..... :** | 30 pages |
| **Name of Testing Laboratory preparing the Report ..... :** | **TÜV Rheinland Shanghai Co. Ltd.** |
| **Applicant's name ..... :** | **ZHEJIANG TIANNENG ENERGY TECHNOLOGY CO., LTD.** |
| **Address ..... :** | No.18 Baoqiao Road,Huaxi Street<br>Changxing County, Huzhou City,Zhejiang Province, P. R. China |
| **Test specification:** | |
| **Standard ..... :** | IEC 62133-2:2017 |
| **Test procedure ..... :** | CB Scheme |
| **Non-standard test method ..... :** | N/A |
| **Test Report Form No. ..... :** | IEC62133_2A |
| **Test Report Form(s) Originator .... :** | DEKRA |
| **Master TRF ..... :** | Dated 2017-08-10 |

**Copyright © 2017 IEC System of Conformity Assessment Schemes for Electrotechnical Equipment and Components (IECEE System). All rights reserved.**

This publication may be reproduced in whole or in part for non-commercial purposes as long as the IECEE is acknowledged as copyright owner and source of the material. IECEE takes no responsibility for and will not assume liability for damages resulting from the reader's interpretation of the reproduced material due to its placement and context.

If this Test Report Form is used by non-IECEE members, the IECEE/IEC logo and the reference to the CB Scheme procedure shall be removed.

**This report is not valid as a CB Test Report unless signed by an approved CB Testing Laboratory and appended to a CB Test Certificate issued by an NCB in accordance with IECEE 02.**

**General disclaimer:**

The test results presented in this report relate only to the object tested.
This report shall not be reproduced, except in full, without the written approval of the Issuing CB Testing Laboratory. The authenticity of this Test Report and its contents can be verified by contacting the NCB, responsible for this Test Report.

| | |
|---|---|
| **Test item description ..... :** | Rechargeable Li-ion Cell |
| **Trade Mark ..... :** | N/A |
| **Manufacturer ..... :** | **Same as applicant.** |
| **Model/Type reference ..... :** | 1) TNL-ITR18650-P-1300, 2) TNL-ITR18650-P-1500,<br>3) TNL-ITR18650-1800F, 4) TNL-ITR18650-2000P,<br>5) TNL-ITR18650-2000F, 6) TNL-ITR18650-2200P,<br>7) TNL-ITR18650-2200F, 8) TNL-ITR18650-2200E,<br>9) TNL-ITR18650-2400P, 10) TNL-ITR18650-2500F,<br>11) TNL-ITR18650-2600P, 12) TNL-ITR18650-2800F,<br>13) TNL-ITR18650-2900F, 14) TNL-ITR18650-3000F |
| **Ratings ..... :** | See page 6 and page 7. |

| | | | |
|---|---|---|---|
| **Responsible Testing Laboratory (as applicable), testing procedure and testing location(s):** | | | |
| ☒ | **CB Testing Laboratory:** | **TÜV Rheinland Shanghai Co. Ltd.** | |
| **Testing location/ address.....:** | | No.177, 178, Lane 777 West Guangzhong Road, Jing'an District, Shanghai, China | |
| **Tested by (name, function, signature).....:** | | Celin Cai | |
| **Approved by (name, function, signature)...:** | | Jeff Zhao | |
| ☐ | **Testing procedure: CTF Stage 1:** | | |
| **Testing location/ address.....:** | | | |
| **Tested by (name, function, signature).....:** | | | |
| **Approved by (name, function, signature)...:** | | | |
| ☐ | **Testing procedure: CTF Stage 2:** | | |
| **Testing location/ address.....:** | | | |
| **Tested by (name + signature) .....:** | | | |
| **Witnessed by (name, function, signature) .:** | | | |
| **Approved by (name, function, signature)...:** | | | |
| ☐ | **Testing procedure: CTF Stage 3:** | | |
| ☐ | **Testing procedure: CTF Stage 4:** | | |
| **Testing location/ address.....:** | | | |
| **Tested by (name, function, signature).....:** | | | |
| **Witnessed by (name, function, signature) .:** | | | |
| **Approved by (name, function, signature)...:** | | | |
| **Supervised by (name, function, signature) :** | | | |

**List of Attachments (including a total number of pages in each attachment):**

Attachment 1: National Differences (4 pages).

Attachment 2: Photo documentation (5 page).

**Summary of testing:**

This test report is standard upgrade and change some parameter(see page 8 for details) based on original test report 17050122 001 which was issued according to IEC 62133: 2012. Additional test was considered as below description.

| **Tests performed (name of test and test clause):** | **Testing location:** |
|---|---|
| Below test is conducted at original test report 17050122 001.<br>cl.5.6.2 Design recommendation(Lithium system);<br>cl.7.1 Charging procedure for test purposes (for Cell);<br>cl.7.2.1 Continuous charging at constant voltage (Cells);<br>cl.7.3.3 Free fall (for Cell);<br>cl.7.3.5 Crush (Cells);<br>cl.7.3.7 Forced discharge (Cells);<br>cl.7.3.9 Forced internal short circuit (Cells) | **TÜV Rheinland (Shenzhen) Co., Ltd.**<br>East of F/1, F/2~F/4, Building 1, Cybio Technology Building No. 6 Langshan No.2 Road, North Hi-tech Industry Park 518057 Shenzhen Nanshan District CHINA |
| **Tests performed (name of test and test clause):** | **Testing location:** |
| Below test is conducted at this test report.<br>cl.5.6.2 Design recommendation;<br>cl.7.1 Charging procedure for test purposes;<br>cl.7.3.1 External short circuit;<br>cl.7.3.4 Thermal abuse;<br>cl.7.3.5 Crush(low temperature);<br><br>Tests are made with the number of cells specified in IEC 62133-2: 2017 Table 1. | **TÜV Rheinland Shanghai Co. Ltd.**<br>No.177, 178, Lane 777 West Guangzhong Road, Jing'an District, Shanghai, China |

**Summary of compliance with National Differences (List of countries addressed):**

SG, CA

Explanation of used codes: SG=Singapore, CA=Canada

☒ **The product fulfils the requirements of <u>EN62133-2: 2017</u>**

Cl.7.3.9 Forced internal short circuit was considered for France, Japan, Korea and Switzerland.

**Copy of marking plate:**

**The artwork below may be only a draft. The use of certification marks on a product must be authorized by the respective NCBs that own these marks.**

Rechargeable Li-ion Cell Date Code: XXXX
TNL-ITR18650-P-1300 (INCMR19/66)
\+ 3.7V 1300mAh -
ZHEJIANG TIANNENG ENERGY TECHNOLOGY CO., LTD

Rechargeable Li-ion Cell Date Code: XXXX
TNL-ITR18650-P-1500 (INCMR19/66)
\+ 3.7V 1500mAh -
ZHEJIANG TIANNENG ENERGY TECHNOLOGY CO., LTD

Rechargeable Li-ion Cell Date Code: XXXX
TNL-ITR18650-1800F (INCMR19/66)
\+ 3.7V 1800mAh -
ZHEJIANG TIANNENG ENERGY TECHNOLOGY CO., LTD

Rechargeable Li-ion Cell Date Code: XXXX
TNL-ITR18650-2000P (INCMR19/66)
\+ 3.7V 2000mAh -
ZHEJIANG TIANNENG ENERGY TECHNOLOGY CO., LTD

Rechargeable Li-ion Cell Date Code: XXXX
TNL-ITR18650-2000F (INCMR19/66)
\+ 3.7V 2000mAh -
ZHEJIANG TIANNENG ENERGY TECHNOLOGY CO., LTD

Rechargeable Li-ion Cell Date Code: XXXX
TNL-ITR18650-2200P (INCMR19/66)
\+ 3.7V 2200mAh -
ZHEJIANG TIANNENG ENERGY TECHNOLOGY CO., LTD

Rechargeable Li-ion Cell Date Code: XXXX
TNL-ITR18650-2200F (INCMR19/66)
\+ 3.7V 2200mAh -
ZHEJIANG TIANNENG ENERGY TECHNOLOGY CO., LTD

Rechargeable Li-ion Cell Date Code: XXXX
TNL-ITR18650-2200E (INCMR19/66)
\+ 3.7V 2200mAh -
ZHEJIANG TIANNENG ENERGY TECHNOLOGY CO., LTD

Rechargeable Li-ion Cell Date Code: XXXX
TNL-ITR18650-2400P (INCMR19/66)
\+ 3.7V 2400mAh -
ZHEJIANG TIANNENG ENERGY TECHNOLOGY CO., LTD

Rechargeable Li-ion Cell Date Code: XXXX
TNL-ITR18650-2500F (INCMR19/66)
\+ 3.7V 2500mAh -
ZHEJIANG TIANNENG ENERGY TECHNOLOGY CO., LTD

Rechargeable Li-ion Cell Date Code: XXXX
TNL-ITR18650-2600P (INCMR19/66)
\+ 3.7V 2600mAh -
ZHEJIANG TIANNENG ENERGY TECHNOLOGY CO., LTD

Rechargeable Li-ion Cell Date Code: XXXX
TNL-ITR18650-2800F (INCMR19/66)
\+ 3.7V 2800mAh -
ZHEJIANG TIANNENG ENERGY TECHNOLOGY CO., LTD

Rechargeable Li-ion Cell Date Code: XXXX
TNL-ITR18650-2900F (INCMR19/66)
\+ 3.7V 2900mAh -
ZHEJIANG TIANNENG ENERGY TECHNOLOGY CO., LTD

Rechargeable Li-ion Cell Date Code: XXXX
TNL-ITR18650-3000F (INCMR19/66)
\+ 3.7V 3000mAh -
ZHEJIANG TIANNENG ENERGY TECHNOLOGY CO., LTD

| | |
|---|---|
| **Test item particulars.....:** | |
| **Classification of installation and use.....:** | N/A |
| **Supply Connection.....:** | DC terminal |
| **Recommend charging method declared by the manufacturer.....:** | See page 6 and page 7 |
| **Discharge current (0,2 It A).....:** | See page 6 and page 7 |
| **Specified final voltage.....:** | See page 6 and page 7 |
| **Upper limit charging voltage per cell.....:** | 4.25V |
| **Maximum charging current.....:** | See page 6 and page 7 |
| **Charging temperature upper limit.....:** | See page 6 and page 7 |
| **Charging temperature lower limit.....:** | See page 6 and page 7 |
| **Polymer cell electrolyte type.....:** | ☐ gel polymer ☐ solid polymer ☒ N/A |
| **Possible test case verdicts:** | |
| **- test case does not apply to the test object.....:** | N/A |
| **- test object does meet the requirement.....:** | P (Pass) |
| **- test object does not meet the requirement.....:** | F (Fail) |
| **Testing.....:** | |
| **Date of receipt of test item .....:** | 2018.09.12 |
| **Date (s) of performance of tests.....:** | 2018.09.12 – 2018.09.28 |
| | |
| **General remarks:** | |
| "(See Enclosure #)" refers to additional information appended to the report.<br>"(See appended table)" refers to a table appended to the report.<br><br>**Throughout this report a ☐ comma / ☒ point is used as the decimal separator.** | |
| **Manufacturer's Declaration per sub-clause 4.2.5 of IECEE 02:** | |
| The application for obtaining a CB Test Certificate includes more than one factory location and a declaration from the Manufacturer stating that the sample(s) submitted for evaluation is (are) representative of the products from each factory has been provided ..... : | ☐ **Yes**<br>☒ **Not applicable** |
| **When differences exist; they shall be identified in the General product information section.** | |
| **Name and address of factory (ies) ..... :** | **Same as applicant.** |

**General product information:**

The cell consists of the positive electrode plate, negative electrode plate, separator, electrolyte and case. The positive and negative electrode plates are housed in the case in the state being separated by separator.

The model of TNL-ITR18650-2000F is identical with TNL-ITR18650-2000P except model name for different customer; the model of TNL-ITR18650-2200F & TNL-ITR18650-2200E is identical with TNL-ITR18650-2200P except model name for different customer.

These models cell are identical except capacity and model name, the models of TNL-ITR18650-3000F, TNL-ITR18650-2400P, TNL-ITR18650-2000P, TNL-ITR18650-1800F, and TNL-ITR18650-P-1300 were selected to be test.

The main features of the cell is shown as below (clause 8.1.1):

| Model | Nominal capacity | Nominal voltage | Nominal Charge Current | Nominal Discharge Current | Maximum Charge Current | Maximum Discharge Current | Maximum Charge Voltage | Cut-off Voltage |
|---|---|---|---|---|---|---|---|---|
| TNL-ITR18650-P-1300 | 1300mAh | 3.7V | 260mA | 650mA | 650mA | 20.0A | 4.2V | 2.75V |
| TNL-ITR18650-P-1500 | 1500mAh | 3.7V | 300mA | 750mA | 750mA | 20.0A | 4.2V | 2.75V |
| TNL-ITR18650-1800F | 1800mAh | 3.7V | 360mA | 900mA | 900mA | 3600mA | 4.2V | 2.75V |
| TNL-ITR18650-2000P or TNL-ITR18650-2000F | 2000mAh | 3.7V | 400mA | 1000mA | 1000mA | 8000mA | 4.2V | 2.75V |
| TNL-ITR18650-2200P or TNL-ITR18650-2200F or TNL-ITR18650-2200E | 2200mAh | 3.7V | 440mA | 1100mA | 1100mA | 8800mA | 4.2V | 2.75V |
| TNL-ITR18650-2400P | 2400mAh | 3.7V | 480mA | 1200mA | 1200mA | 7200mA | 4.2V | 2.75V |
| TNL-ITR18650-2500F | 2500mAh | 3.7V | 500mA | 1250mA | 1250mA | 5000mA | 4.2V | 2.75V |
| TNL-ITR18650-2600P | 2600mAh | 3.7V | 520mA | 1300mA | 1300mA | 7800mA | 4.2V | 2.75V |
| TNL-ITR18650-2800F | 2800mAh | 3.7V | 560mA | 1400mA | 1400mA | 5600mA | 4.2V | 2.75V |
| TNL-ITR18650-2900F | 2900mAh | 3.7V | 580mA | 1450mA | 1450mA | 2900mA | 4.2V | 2.75V |
| TNL-ITR18650-3000F | 3000mAh | 3.7V | 600mA | 1500mA | 1500mA | 3000mA | 4.2V | 2.75V |

Continued: (Clause 8.1.2)

| Model | Upper limit charge voltage | Taper-off current | Lower charge temperature | Upper charge temperature |
|---|---|---|---|---|
| TNL-ITR18650-P-1300 | 4.25V | 65mA | 0°C | 45°C |
| TNL-ITR18650-P-1500 | 4.25V | 75mA | 0°C | 45°C |
| TNL-ITR18650-1800F | 4.25V | 90mA | 0°C | 45°C |
| TNL-ITR18650-2000P or TNL-ITR18650-2000F | 4.25V | 100mA | 0°C | 45°C |
| TNL-ITR18650-2200P or TNL-ITR18650-2200F & TNL-ITR18650-2200E | 4.25V | 110mA | 0°C | 45°C |
| TNL-ITR18650-2400P | 4.25V | 120mA | 0°C | 45°C |
| TNL-ITR18650-2500F | 4.25V | 125mA | 0°C | 45°C |
| TNL-ITR18650-2600P | 4.25V | 130mA | 0°C | 45°C |
| TNL-ITR18650-2800F | 4.25V | 140mA | 0°C | 45°C |
| TNL-ITR18650-2900F | 4.25V | 145mA | 0°C | 45°C |
| TNL-ITR18650-3000F | 4.25V | 150mA | 0°C | 45°C |

**Circuit Diagram**:
None, Cell only.

**Construction:**

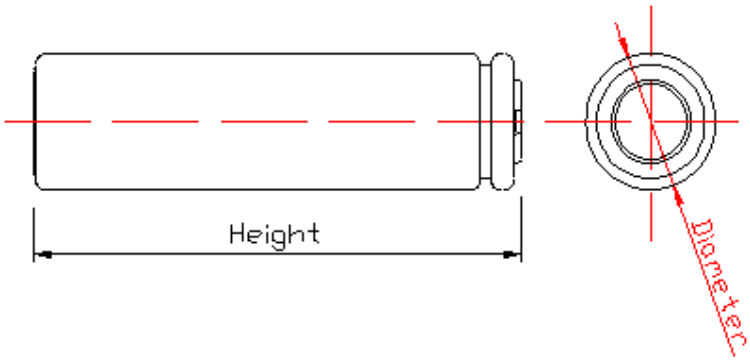

| | | | | |
|---|---|---|---|---|
| Height | 65.0 ± 0.3mm | Diameter | TNL-ITR18650-P-1300 | 18.2 ± 0.2mm |
| | | | TNL-ITR18650-P-1500 | |
| | | | TNL-ITR18650-1800F | |
| | | | TNL-ITR18650-2000P or TNL-ITR18650-2000F | |
| | | | TNL-ITR18650-2200P or TNL-ITR18650-2200F or TNL-ITR18650-2200E | |
| | | | TNL-ITR18650-2400P | |
| | | | TNL-ITR18650-2600P | |
| | | | TNL-ITR18650-2500F | 18.3 ± 0.2mm |
| | | | TNL-ITR18650-2800F | |
| | | | TNL-ITR18650-2900F | |
| | | | TNL-ITR18650-3000F | |

**History of CB Test Report:**

1. Test report No. 17050122 001: The test report was issued by TÜV Rheinland (Shenzhen) Co., Ltd. for ZHEJIANG TIANNENG ENERGY TECHNOLOGY CO., LTD. test according to IEC 62133: 2012.
2. Test report No. 50186274 001: This test report is standard upgrade and change some parameter based on original test report.
   - Update test standards to IEC 62133-2:2017
   - Change some parameter: Normal charge current to 0.2C, Normal discharge current to 0.5C, Max. Charge current to 0.5C, Cut-off Voltage to 2.75V, Charge temperature to 0-45 °C for all models.

| IEC 62133-2 | | | |
|---|---|---|---|
| Clause | Requirement + Test | Result - Remark | Verdict |
| **4** | **PARAMETER MEASUREMENT TOLERANCES** | | P |
| | Parameter measurement tolerances | | P |
| **5** | **GENERAL SAFETY CONSIDERATIONS** | | P |
| **5.1** | **General** | | P |
| | Cells and batteries so designed and constructed that they are safe under conditions of both intended use and reasonably foreseeable misuse | | P |
| **5.2** | **Insulation and wiring** | Cell case is the negative pole | P |
| | The insulation resistance between the positive terminal and externally exposed metal surfaces of the battery (excluding electrical contact surfaces) is not less than 5 MΩ | | N/A |
| | Insulation resistance (MΩ) ..... : | | — |
| | Internal wiring and insulation are sufficient to withstand maximum anticipated current, voltage and temperature requirements | | P |
| | Orientation of wiring maintains adequate clearance and creepage distances between conductors | | P |
| | Mechanical integrity of internal connections accommodates reasonably foreseeable misuse | | P |
| **5.3** | **Venting** | | P |
| | Battery cases and cells incorporate a pressure relief mechanism or are constructed so that they relieve excessive internal pressure at a value and rate that will preclude rupture, explosion and self-ignition | Venting mechanism exists on the cylindrical cell. | P |
| | Encapsulation used to support cells within an outer casing does not cause the battery to overheat during normal operation nor inhibit pressure relief | | N/A |
| **5.4** | **Temperature, voltage and current management** | Cell only. | N/A |
| | Batteries are designed such that abnormal temperature rise conditions are prevented | | N/A |
| | Batteries are designed to be within temperature, voltage and current limits specified by the cell manufacturer | | N/A |
| | Batteries are provided with specifications and charging instructions for equipment manufacturers so that specified chargers are designed to maintain charging within the temperature, voltage and current limits specified | | N/A |
| **5.5** | **Terminal contacts** | | P |
| | The size and shape of the terminal contacts ensure that they can carry the maximum anticipated current | Complied. | P |

| IEC 62133-2 | | | |
|---|---|---|---|
| Clause | Requirement + Test | Result - Remark | Verdict |
| | External terminal contact surfaces are formed from conductive materials with good mechanical strength and corrosion resistance | | P |
| | Terminal contacts are arranged to minimize the risk of short-circuit | | P |
| **5.6** | **Assembly of cells into batteries** | Cell only. | N/A |
| 5.6.1 | General | | N/A |
| | Each battery have an independent control and protection for current, voltage, temperature and any other parameter required for safety and to maintain the cells within their operating region | | N/A |
| | This protection may be provided external to the battery such as within the charger or the end devices | | N/A |
| | If protection is external to the battery, the manufacturer of the battery provide this safety relevant information to the external device manufacturer for implementation | | N/A |
| | If there is more than one battery housed in a single battery case, each battery have protective circuitry that can maintain the cells within their operating regions | | N/A |
| | Manufacturers of cells specify current, voltage and temperature limits so that the battery manufacturer/designer may ensure proper design and assembly | | N/A |
| | Batteries that are designed for the selective discharge of a portion of their series connected cells incorporate circuitry to prevent operation of cells outside the limits specified by the cell manufacturer | | N/A |
| | Protective circuit components added as appropriate and consideration given to the end-device application | | N/A |
| | The manufacturer of the battery provide a safety analysis of the battery safety circuitry with a test report including a fault analysis of the protection circuit under both charging and discharging conditions confirming the compliance | | N/A |
| 5.6.2 | Design recommendation | Cell only. | N/A |
| | For the battery consisting of a single cell or a single cellblock, it is recommended that the charging voltage of the cell does not exceed the upper limit of the charging voltage specified in Table 2 | | N/A |

| IEC 62133-2 | | | |
|---|---|---|---|
| Clause | Requirement + Test | Result - Remark | Verdict |
| | For the battery consisting of series-connected plural single cells or series-connected plural cellblocks, it is recommended that the voltages of any one of the single cells or single cellblocks does not exceed the upper limit of the charging voltage, specified in Table 2, by monitoring the voltage of every single cell or the single cellblocks | | N/A |
| | For the battery consisting of series-connected plural single cells or series-connected plural cellblocks, it is recommended that charging is stopped when the upper limit of the charging voltage is exceeded for any one of the single cells or single cellblocks by measuring the voltage of every single cell or the single cellblocks | | N/A |
| | For batteries consisting of series-connected cells or cell blocks, nominal charge voltage not be counted as an overcharge protection | | N/A |
| | For batteries consisting of series-connected cells or cell blocks, cells have closely matched capacities, be of the same design, be of the same chemistry and be from the same manufacturer | | N/A |
| | It is recommended that the cells and cell blocks not discharged beyond the cell manufacturer's specified final voltage | | N/A |
| | For batteries consisting of series-connected cells or cell blocks, cell balancing circuitry incorporated into the battery management system | | N/A |
| 5.6.3 | Mechanical protection for cells and components of batteries | | N/A |
| | Mechanical protection for cells, cell connections and control circuits within the battery provided to prevent damage as a result of intended use and reasonably foreseeable misuse | | N/A |
| | The mechanical protection can be provided by the battery case or it can be provided by the end product enclosure for those batteries intended for building into an end product | | N/A |
| | The battery case and compartments housing cells designed to accommodate cell dimensional tolerances during charging and discharging as recommended by the cell manufacturer | | N/A |
| | For batteries intended for building into a portable end product, testing with the battery installed within the end product considered when conducting mechanical tests | | N/A |
| **5.7** | **Quality plan** | | P |

| IEC 62133-2 | | | |
|---|---|---|---|
| Clause | Requirement + Test | Result - Remark | Verdict |
| | The manufacturer prepares and implements a quality plan that defines procedures for the inspection of materials, components, cells and batteries and which covers the whole process of producing each type of cell or battery | Complied.<br>ISO 9001: 2008 certificate provided. | P |
| **5.8** | **Battery safety components** | | N/A |
| | According annex F | See TABLE: Critical components information | N/A |
| **6** | **TYPE TEST AND SAMPLE SIZE** | | P |
| | Tests are made with the number of cells or batteries specified in Table 1 using cells or batteries that are not more than six months old | Complied.<br>Lithium system. | P |
| | Coin cells with resistance ≤ 3 Ω (measured according annex D) are tested according table 1 | Not coin cells | N/A |
| | Unless otherwise specified, tests are carried out in an ambient temperature of 20 °C ± 5 °C | | P |
| | The safety analysis of 5.6.1 identify those components of the protection circuit that are critical for short-circuit, overcharge and overdischarge protection | | N/A |
| | When conducting the short-circuit test, consideration given to the simulation of any single fault condition that is likely to occur in the protecting circuit that would affect the short-circuit test | | N/A |
| **7** | **SPECIFIC REQUIREMENTS AND TESTS** | | P |
| **7.1** | **Charging procedure for test purposes** | | P |
| 7.1.1 | First procedure | | P |
| | This charging procedure applies to subclauses other than those specified in 7.1.2 | Complied. | P |
| | Unless otherwise stated in this document, the charging procedure for test purposes is carried out in an ambient temperature of 20 °C ± 5 °C, using the method declared by the manufacturer | See page 5. | P |
| | Prior to charging, the battery have been discharged at 20 °C ± 5 °C at a constant current of 0,2 It A down to a specified final voltage | See page 5. | P |
| 7.1.2 | Second procedure | | P |
| | This charging procedure applies only to 7.3.1, 7.3.4, 7.3.5, and 7.3.9 | | P |

| IEC 62133-2 | | | |
|---|---|---|---|
| Clause | Requirement + Test | Result - Remark | Verdict |
| | After stabilization for 1 h and 4 h, respectively, at ambient temperature of highest test temperature and lowest test temperature, as specified in Table 2, cells are charged by using the upper limit charging voltage and maximum charging current, until the charging current is reduced to 0,05 It A, using a constant voltage charging method | The upper limit test temperature was 45°C; The lower limit test temperature was -5°C. | P |
| **7.2** | **Intended use** | | P |
| 7.2.1 | Continuous charging at constant voltage (cells) | | P |
| | Fully charged cells are subjected for 7 days to a charge using the charging method for current and standard voltage specified by the cell manufacturer | | P |
| | Results: No fire. No explosion. No leakage.....: | (See appended table 7.2.1) | P |
| 7.2.2 | Case stress at high ambient temperature (battery) | Cell only | N/A |
| | Oven temperature (°C).....: | | — |
| | Results: No physical distortion of the battery case resulting in exposure of internal protective components and cells | | N/A |
| **7.3** | **Reasonably foreseeable misuse** | | P |
| 7.3.1 | External short-circuit (cell) | Tested complied. | P |
| | The cells were tested until one of the following occurred: | | P |
| | - 24 hours elapsed; or | | N/A |
| | - The case temperature declined by 20 % of the maximum temperature rise | | P |
| | Results: No fire. No explosion.....: | (See appended table 7.3.1) | P |
| 7.3.2 | External short-circuit (battery) | | N/A |
| | The batteries were tested until one of the following occurred: | | N/A |
| | - 24 hours elapsed; or | | N/A |
| | - The case temperature declined by 20 % of the maximum temperature rise | | N/A |
| | In case of rapid decline in short circuit current, the battery pack remained on test for an additional one hour after the current reached a low end steady state condition | | N/A |
| | A single fault in the discharge protection circuit conducted on one to four (depending upon the protection circuit) of the five samples before conducting the short-circuit test | | N/A |
| | A single fault applies to protective component parts such as MOSFET, fuse, thermostat or positive temperature coefficient (PTC) thermistor | | N/A |
| | Results: No fire. No explosion.....: | | N/A |

| IEC 62133-2 | | | |
|---|---|---|---|
| Clause | Requirement + Test | Result - Remark | Verdict |
| 7.3.3 | Free fall | Tested complied. | P |
| | Results: No fire. No explosion | No fire. No explosion | P |
| 7.3.4 | Thermal abuse (cells) | Tested complied. | P |
| | Oven temperature (°C) ..... : | 130°C | — |
| | Results: No fire. No explosion | No fire. No explosion | P |
| 7.3.5 | Crush (cells) | Tested complied. | P |
| | The crushing force was released upon: | | P |
| | - The maximum force of 13 kN ± 0,78 kN has been applied; or | | P |
| | - An abrupt voltage drop of one-third of the original voltage has been obtained | | N/A |
| | Results: No fire. No explosion..... : | (See appended table 7.3.5) | P |
| 7.3.6 | Over-charging of battery | | N/A |
| | The supply voltage which is: | | N/A |
| | - 1,4 times the upper limit charging voltage presented in Table A.1 (but not to exceed 6,0 V) for single cell/cell block batteries or | | N/A |
| | - 1,2 times the upper limit charging voltage resented in Table A.1 per cell for series connected multi-cell batteries, and | | N/A |
| | - Sufficient to maintain a current of 2,0 It A throughout the duration of the test or until the supply voltage is reached | | N/A |
| | Test was continued until the temperature of the outer casing: | | N/A |
| | - Reached steady state conditions (less than 10 °C change in 30-minute period); or | | N/A |
| | - Returned to ambient | | N/A |
| | Results: No fire. No explosion..... : | | N/A |
| 7.3.7 | Forced discharge (cells) | Tested complied. | P |
| | If the discharge voltage reaches the negative value of upper limit charging voltage within the testing duration, the voltage is maintained at the negative value of the upper limit charging voltage by reducing the current for the remainder of the testing duration | | N/A |
| | If the discharge voltage does not reach the negative value of upper limit charging voltage within the testing duration, the test is terminated at the end of the testing duration | | P |
| | Results: No fire. No explosion..... : | (See appended table 7.3.7) | P |
| 7.3.8 | Mechanical tests (batteries) | | N/A |
| 7.3.8.1 | Vibration | | N/A |

| IEC 62133-2 | | | |
|---|---|---|---|
| Clause | Requirement + Test | Result - Remark | Verdict |
| | Results: No fire, no explosion, no rupture, no leakage or venting. ..... : | | N/A |
| 7.3.8.2 | Mechanical shock | | N/A |
| | Results: No leakage, no venting, no rupture, no explosion and no fire ..... : | | N/A |
| 7.3.9 | Design evaluation – Forced internal short-circuit (cells) | Tested complied. | P |
| | The cells complied with national requirement for ..... : | France, Japan, Republic of Korea, Switzerland | — |
| | The pressing was stopped upon: | | P |
| | - A voltage drop of 50 mV has been detected; or | | P |
| | - The pressing force of 800 N (cylindrical cells) or 400 N (prismatic cells) has been reached | 800N for cylindrical cell. | P |
| | Results: No fire ..... : | (See appended table 7.3.9) | P |
| **8** | **INFORMATION FOR SAFETY** | | P |
| **8.1** | **General** | | P |
| | Manufacturers of secondary cells ensure that information is provided about current, voltage and temperature limits of their products | Information for safety mentioned in manufacturer's specifications. | P |
| | Manufacturers of batteries ensure that equipment manufacturers and, in the case of direct sales, end-users are provided with information to minimize and mitigate hazards | Information for safety mentioned in manufacturer's specifications. | P |
| | Systems analyses performed by device manufacturers to ensure that a particular battery design prevents hazards from occurring during use of a product | | N/A |
| | As appropriate, any information relating to hazard avoidance resulting from a system analysis provided to the end user | | N/A |
| | Do not allow children to replace batteries without adult supervision | | N/A |
| **8.2** | **Small cell and battery safety information** | Not small cell and battery. | N/A |
| | The following warning language is to be provided with the information packaged with the small cells and batteries or equipment using them: | | N/A |
| | - Keep small cells and batteries which are considered swallowable out of the reach of children | | N/A |
| | - Swallowing may lead to burns, perforation of soft tissue, and death. Severe burns can occur within 2 h of ingestion | | N/A |
| | - In case of ingestion of a cell or battery, seek medical assistance promptly | | N/A |

| IEC 62133-2 | | | |
|---|---|---|---|
| Clause | Requirement + Test | Result - Remark | Verdict |
| **9** | **MARKING** | | P |
| **9.1** | **Cell marking** | | P |
| | Cells marked as specified in IEC 61960, except coin cells | See marking plate on page 4. | P |
| | Coin cells whose external surface area is too small to accommodate the markings on the cells show the designation and polarity | | N/A |
| | By agreement between the cell manufacturer and the battery and/or end product manufacturer, component cells used in the manufacture of a battery need not be marked | | N/A |
| **9.2** | **Battery marking** | | N/A |
| | Batteries marked as specified in IEC 61960, except for coin batteries | | N/A |
| | Coin batteries whose external surface area is too small to accommodate the markings on the batteries show the designation and polarity. Batteries also marked with an appropriate caution statement | | N/A |
| | Terminals have clear polarity marking on the external surface of the battery | | N/A |
| | Batteries with keyed external connectors designed for connection to specific end products need not be marked with polarity markings if the design of the external connector prevents reverse polarity connections | | N/A |
| **9.3** | **Caution for ingestion of small cells and batteries** | Not small cell and battery. | N/A |
| | Coin cells and batteries identified as small batteries according to 8.2 include a caution statement regarding the hazards of ingestion in accordance with 8.2 | | N/A |
| | When small cells and batteries are intended for direct sale in consumer-replaceable applications, caution for ingestion given on the immediate package | | N/A |
| **9.4** | **Other information** | | P |
| | Storage and disposal instructions | Information for storage and disposal instructions mentioned in manufacturer's specifications. | P |
| | Recommended charging instructions | Information for recommended charging instructions mentioned in manufacturer's specifications. | P |
| **10** | **PACKAGING AND TRANSPORT** | | P |

| IEC 62133-2 | | | |
|---|---|---|---|
| Clause | Requirement + Test | Result - Remark | Verdict |
| | Packaging for coin cells not small enough to fit within the limits of the ingestion gauge of Figure 3 | Not coin cells. | N/A |
| | The materials and packaging design are chosen so as to prevent the development of unintentional electrical conduction, corrosion of the terminals and ingress of environmental contaminants | | P |
| **ANNEX A** | **CHARGING AND DISCHARGING RANGE OF SECONDARY LITHIUM ION CELLS FOR SAFE USE** | | P |
| **A.1** | **General** | | P |
| **A.2** | **Safety of lithium ion secondary battery** | Complied. | P |
| **A.3** | **Consideration on charging voltage** | Complied. | P |
| A.3.1 | General | Charging voltage is 4.2V | P |
| A.3.2 | Upper limit charging voltage | 4.25V | P |
| A.3.2.1 | General | | P |
| A.3.2.2 | Explanation of safety viewpoint | | N/A |
| A.3.2.3 | Safety requirements, when different upper limit charging voltage is applied | 4.25V applied. | N/A |
| **A.4** | **Consideration of temperature and charging current** | | P |
| A.4.1 | General | | P |
| A.4.2 | Recommended temperature range | See A.4.2.2. | P |
| A.4.2.1 | General | | P |
| A.4.2.2 | Safety consideration when a different recommended temperature range is applied | Charging temperature declared by client is: 0-45°C | P |
| A.4.3 | High temperature range | Not higher than the temperature range specific in this standard. | N/A |
| A.4.3.1 | General | | N/A |
| A.4.3.2 | Explanation of safety viewpoint | | N/A |
| A.4.3.3 | Safety considerations when specifying charging conditions in the high temperature range | | N/A |
| A.4.3.4 | Safety considerations when specifying a new upper limit in the high temperature range | | N/A |
| A.4.4 | Low temperature range | Charging low temperature declared by client: 0°C | P |
| A.4.4.1 | General | | P |
| A.4.4.2 | Explanation of safety viewpoint | | P |
| A.4.4.3 | Safety considerations, when specifying charging conditions in the low temperature range | | P |
| A.4.4.4 | Safety considerations when specifying a new lower limit in the low temperature range | -5°C applied. | P |

| IEC 62133-2 | | | |
|---|---|---|---|
| Clause | Requirement + Test | Result - Remark | Verdict |
| A.4.5 | Scope of the application of charging current | | P |
| A.4.6 | Consideration of discharge | | P |
| A.4.6.1 | General | | P |
| A.4.6.2 | Final discharge voltage and explanation of safety viewpoint | | P |
| A.4.6.3 | Discharge current and temperature range | | P |
| A.4.6.4 | Scope of application of the discharging current | | P |
| **A.5** | **Sample preparation** | | P |
| A.5.1 | General | | P |
| A.5.2 | Insertion procedure for nickel particle to generate internal short | | P |
| A.5.3 | Disassembly of charged cell | | P |
| A.5.4 | Shape of nickel particle | | P |
| A.5.5 | Insertion of nickel particle in cylindrical cell | | P |
| A.5.5.1 | Insertion of nickel particle in winding core | | P |
| A.5.5.2 | Marking the position of the nickel particle on both ends of the winding core of the separator | | P |
| A.5.6 | Insertion of nickel particle in prismatic cell | | N/A |
| **A.6** | **Experimental procedure of the forced internal short-circuit test** | | P |
| A.6.1 | Material and tools for preparation of nickel particle | | P |
| A.6.2 | Example of a nickel particle preparation procedure | | P |
| A.6.3 | Positioning (or placement) of a nickel particle | | P |
| A.6.4 | Damaged separator precaution | | P |
| A.6.5 | Caution for rewinding separator and electrode | | P |
| A.6.6 | Insulation film for preventing short-circuit | | P |
| A.6.7 | Caution when disassembling a cell | | P |
| A.6.8 | Protective equipment for safety | | P |
| A.6.9 | Caution in the case of fire during disassembling | | P |
| A.6.10 | Caution for the disassembling process and pressing the electrode core | | P |
| A.6.11 | Recommended specifications for the pressing device | | P |
| **ANNEX B** | **RECOMMENDATIONS TO EQUIPMENT MANUFACTURERS AND BATTERY ASSEMBLERS** | | N/A |
| **ANNEX C** | **RECOMMENDATIONS TO THE END-USERS** | | N/A |
| **ANNEX D** | **MEASUREMENT OF THE INTERNAL AC RESISTANCE FOR COIN CELLS** | | N/A |

| IEC 62133-2 | | | |
|---|---|---|---|
| Clause | Requirement + Test | Result - Remark | Verdict |
| **D.1** | **General** | Not coin cells. | N/A |
| **D.2** | **Method** | | N/A |
| | A sample size of three coin cells is required for this measurement..... : | (See appended table D.2) | N/A |
| | Coin cells with an internal resistance of less than or equal to 3 Ω are subjected to the testing according to Clause 6 and Table 1 | | N/A |
| | Coin cells with an internal resistance greater than 3 Ω require no further testing | | N/A |
| **ANNEX E** | **PACKAGING AND TRANSPORT** | | N/A |
| **ANNEX F** | **COMPONENT STANDARDS REFERENCES** | | N/A |

| | TABLE: Critical components information | | | | P |
|---|---|---|---|---|---|
| **Object / part No.** | **Manufacturer / trademark** | **Type / model** | **Technical data** | **Standard** | **Mark(s) of conformity[1)]** |
| Cell Case | -- | -- | Steel Foil, L65.0*Ø18.50mm | -- | -- |
| Positive Electrode | -- | -- | Positive material LiNiCoMnO2, coated on Al film,<br>TNL-ITR18650-P-1300: 9.03g,<br>TNL-ITR18650-P-1500: 10.39g,<br>TNL-ITR18650-1800F: 15.00g,<br>TNL-ITR18650-2000P & TNL-ITR18650-2000F : 15.01g,<br>TNL-ITR18650-2200P & TNL-ITR18650-2200F & TNL-ITR18650-2200E: 14.61g,<br>TNL-ITR18650-2400P: 15.40g,<br>TNL-ITR18650-2500F: 15.75g,<br>TNL-ITR18650-2600P:16.15g,<br>TNL-ITR18650-2800F:15.25g,<br>TNL-ITR18650-2900F:15.81g,<br>TNL-ITR18650-3000F:16.30g | -- | -- |
| Negative Electrode | -- | -- | Negative material C coated on Cu film<br>TNL-ITR18650-P-1300: 5.19g,<br>TNL-ITR18650-P-1500: 5.71g,<br>TNL-ITR18650-1800F: 7.25g,<br>TNL-ITR18650-2000P & TNL-ITR18650-2000F: 7.25g,<br>TNL-ITR18650-2200P & TNL-ITR18650-2200F & TNL-ITR18650-2200E: 7.88g,<br>TNL-ITR18650-2400P: 8.12g,<br>TNL-ITR18650-2800F:9.24g,<br>TNL-ITR18650-2900F:9.56g,<br>TNL-ITR18650-3000F:9.67g | -- | -- |
| Separator | SHENZHEN XURAN ELECTRONICS CO.,LTD. | 20μm | PE/PP,<br>Shutdown<br>temperature: 130°C | -- | -- |

| | | | | | |
|---|---|---|---|---|---|
| Electrolyte | -- | -- | $LiPF_6$ dissolved in organic solvent (EC+ DMC+EMC)<br>TNL-ITR18650-P-1300: 5.5g,<br>TNL-ITR18650-P-1500: 5.4g,<br>TNL-ITR18650-1800F: 5.8g,<br>TNL-ITR18650-2000P & TNL-ITR18650-2000F: 5.8g,<br>TNL-ITR18650-2200P & TNL-ITR18650-2200F & TNL-ITR18650-2200E: 5.6g,<br>TNL-ITR18650-2400P: 5.5g,<br>TNL-ITR18650-2500F: 5.4g,<br>TNL-ITR18650-2600P: 5.3g,<br>TNL-ITR18650-2800F: 5.2g,<br>TNL-ITR18650-2900F: 5.1g,<br>TNL-ITR18650-3000F: 5.0g | -- | -- |
| Supplementary information:<br>1) Provided evidence ensures the agreed level of compliance. See OD-CB2039. | | | | | |

| 7.2.1 | TABLE: Continuous charging at constant voltage (cells) | | | P |
|---|---|---|---|---|
| **Sample no.** | **Recommended charging voltage Vc (Vdc)** | **Recommended charging current $I_{rec}$ (mA)** | **OCV before test (Vdc)** | **Results** |
| **For TNL-ITR18650-3000F** | | | | |
| 1 | 4.2 | 600 | 4.16 | P |
| 2 | 4.2 | 600 | 4.15 | P |
| 3 | 4.2 | 600 | 4.15 | P |
| 4 | 4.2 | 600 | 4.16 | P |
| 5 | 4.2 | 600 | 4.16 | P |
| **For TNL-ITR18650-2400P** | | | | |
| 1 | 4.2 | 480 | 4.15 | P |
| 2 | 4.2 | 480 | 4.16 | P |
| 3 | 4.2 | 480 | 4.16 | P |
| 4 | 4.2 | 480 | 4.14 | P |
| 5 | 4.2 | 480 | 4.14 | P |
| **For TNL-ITR18650-2000P** | | | | |
| 1 | 4.2 | 400 | 4.16 | P |
| 2 | 4.2 | 400 | 4.16 | P |
| 3 | 4.2 | 400 | 4.16 | P |
| 4 | 4.2 | 400 | 4.16 | P |
| 5 | 4.2 | 400 | 4.16 | P |
| **For TNL-ITR18650-1800F** | | | | |
| 1 | 4.2 | 360 | 4.19 | P |
| 2 | 4.2 | 360 | 4.18 | P |
| 3 | 4.2 | 360 | 4.18 | P |
| 4 | 4.2 | 360 | 4.18 | P |
| 5 | 4.2 | 360 | 4.18 | P |
| **For TNL-ITR18650-P-1300** | | | | |
| 1 | 4.2 | 260 | 4.18 | P |
| 2 | 4.2 | 260 | 4.18 | P |
| 3 | 4.2 | 260 | 4.18 | P |
| 4 | 4.2 | 260 | 4.18 | P |
| 5 | 4.2 | 260 | 4.19 | P |
| **Supplementary information:**<br>- No fire or explosion<br>- No leakage | | | | |

| 7.3.1 | TABLE: External short-circuit (cell) | | | | P |
|---|---|---|---|---|---|
| **Sample no.** | **Ambient T (°C)** | **OCV before test (Vdc)** | **Resistance of circuit (Ω)** | **Maximum case temperature ~~rise ΔT~~, °C** | **Results** |
| **For TNL-ITR18650-3000F** | | | | | |
| **Samples charged at charging temperature upper limit (45°C)** | | | | | |
| 1 | 55.0 | 4.192 | 0.063 | 107.5 | P |
| 2 | 55.0 | 4.193 | 0.083 | 121.56 | P |
| 3 | 55.0 | 4.190 | 0.073 | 111.25 | P |
| 4 | 55.0 | 4.192 | 0.085 | 96.30 | P |
| 5 | 55.0 | 4.195 | 0.065 | 116.78 | P |
| **Samples charged at charging temperature lower limit (-5°C)** | | | | | |
| 6 | 55.0 | 4.176 | 0.065 | 118.55 | P |
| 7 | 55.0 | 4.177 | 0.082 | 82.91 | P |
| 8 | 55.0 | 4.175 | 0.073 | 114.92 | P |
| 9 | 55.0 | 4.179 | 0.080 | 105.9 | P |
| 10 | 55.0 | 4173 | 0.073 | 112.90 | P |
| **For TNL-ITR18650-2400P** | | | | | |
| **Samples charged at charging temperature upper limit (45°C)** | | | | | |
| 1 | 55.0 | 4.201 | 0.065 | 79.20 | P |
| 2 | 55.0 | 4.202 | 0.087 | 72.10 | P |
| 3 | 55.0 | 4.201 | 0.0 | 74.80 | P |
| 4 | 55.0 | 4.202 | 0.084 | 82.91 | P |
| 5 | 55.0 | 4.202 | 0.069 | 61.35 | P |
| **Samples charged at charging temperature lower limit (-5°C)** | | | | | |
| 6 | 55.0 | 4.185 | 0.067 | 76.65 | P |
| 7 | 55.0 | 4.186 | 0.085 | 71.95 | P |
| 8 | 55.0 | 4.190 | 0.070 | 75.82 | P |
| 9 | 55.0 | 4.178 | 0.081 | 70.92 | P |
| 10 | 55.0 | 4.183 | 0.071 | 81.75 | P |
| **For TNL-ITR18650-2000P** | | | | | |
| **Samples charged at charging temperature upper limit (45°C)** | | | | | |
| 1 | 55.0 | 4.157 | 0.065 | 79.25 | P |
| 2 | 55.0 | 4.162 | 0.085 | 72.05 | P |
| 3 | 55.0 | 4.168 | 0.072 | 70.15 | P |
| 4 | 55.0 | 4.165 | 0.083 | 77.70 | P |
| 5 | 55.0 | 4.160 | 0.070 | 64.75 | P |
| **Samples charged at charging temperature lower limit (-5°C)** | | | | | |
| 6 | 55.0 | 4.153 | 0.066 | 69.10 | P |

| | | | | | |
|---|---|---|---|---|---|
| 7 | 55.0 | 4.160 | 0.083 | 63.32 | P |
| 8 | 55.0 | 4.165 | 0.070 | 72.61 | P |
| 9 | 55.0 | 4.166 | 0.085 | 70.01 | P |
| 10 | 55.0 | 4.169 | 0.071 | 79.50 | P |
| **For TNL-ITR18650-1800F** | | | | | |
| **Samples charged at charging temperature upper limit (45°C)** | | | | | |
| 1 | 55.0 | 4.136 | 0.066 | 72.95 | P |
| 2 | 55.0 | 4.153 | 0.086 | 67.15 | P |
| 3 | 55.0 | 4.154 | 0.073 | 70.75 | P |
| 4 | 55.0 | 4.153 | 0.085 | 67.40 | P |
| 5 | 55.0 | 4.159 | 0.071 | 65.51 | P |
| **Samples charged at charging temperature lower limit (-5°C)** | | | | | |
| 6 | 55.0 | 4.152 | 0.065 | 73.70 | P |
| 7 | 55.0 | 4.153 | 0.088 | 72.35 | P |
| 8 | 55.0 | 4.153 | 0.071 | 72.15 | P |
| 9 | 55.0 | 4.154 | 0.086 | 64.55 | P |
| 10 | 55.0 | 4.157 | 0.070 | 72.50 | P |
| **For TNL-ITR18650-P-1300** | | | | | |
| **Samples charged at charging temperature upper limit (45°C)** | | | | | |
| 1 | 55.0 | 4.192 | 0.066 | 91.35 | P |
| 2 | 55.0 | 4.192 | 0.074 | 94.30 | P |
| 3 | 55.0 | 4.191 | 0.071 | 94.40 | P |
| 4 | 55.0 | 4.192 | 0.086 | 86.85 | P |
| 5 | 55.0 | 4.195 | 0.069 | 81.55 | P |
| **Samples charged at charging temperature lower limit (-5°C)** | | | | | |
| 6 | 55.0 | 4.178 | 0.065 | 98.45 | P |
| 7 | 55.0 | 4.179 | 0.073 | 100.60 | P |
| 8 | 55.0 | 4.180 | 0.070 | 97.42 | P |
| 9 | 55.0 | 4.175 | 0.086 | 89.45 | P |
| 10 | 55.0 | 4.201 | 0.068 | 81.35 | P |
| **Supplementary information:**<br>- No fire or explosion | | | | | |

| 7.3.2 | TABLE: External short-circuit (battery) | | | | | N/A |
|---|---|---|---|---|---|---|
| **Sample no.** | **Ambient T (°C)** | **OCV before test (Vdc)** | **Resistance of circuit (mΩ)** | **Maximum case temperature ~~rise ΔT~~, °C** | **Component single fault condition** | **Results** |
| | | | | | | |

| | | | | | | |
|---|---|---|---|---|---|---|
| | | | | | | |
| | | | | | | |
| | | | | | | |
| | | | | | | |

**Supplementary information:**
- No fire or explosion

| 7.3.5 | TABLE: Crush (cells) | | | P |
|---|---|---|---|---|
| **Sample no.** | **OCV before test (Vdc)** | **OCV at removal of crushing force (Vdc)** | **Maximum force applied to the cell during crush (kN)** | **Results** |
| **For TNL-ITR18650-3000F** | | | | |
| **Samples charged at charging temperature upper limit (45°C)** | | | | |
| 1 | 4.18 | 4.17 | 13 | -- |
| 2 | 4.19 | 4.19 | 13 | -- |
| 3 | 4.19 | 4.19 | 13 | -- |
| 4 | 4.19 | 4.18 | 13 | -- |
| 5 | 4.19 | 4.18 | 13 | -- |
| **Samples charged at charging temperature lower limit (-5°C)** | | | | |
| 1 | 4.18 | 4.18 | 13 | -- |
| 2 | 4.18 | 4.18 | 13 | -- |
| 3 | 4.16 | 4.16 | 13 | -- |
| 4 | 4.19 | 4.18 | 13 | -- |
| 5 | 4.18 | 4.17 | 13 | -- |
| **For TNL-ITR18650-2400P** | | | | |
| **Samples charged at charging temperature upper limit (45°C)** | | | | |
| 1 | 4.20 | 4.20 | 13 | -- |
| 2 | 4.21 | 4.20 | 13 | -- |
| 3 | 4.21 | 4.21 | 13 | -- |
| 4 | 4.20 | 4.20 | 13 | -- |
| 5 | 4.20 | 4.20 | 13 | -- |
| **Samples charged at charging temperature lower limit (-5°C)** | | | | |
| 1 | 4.15 | 4.15 | 13 | -- |
| 2 | 4.16 | 4.16 | 13 | -- |
| 3 | 4.16 | 4.16 | 13 | -- |
| 4 | 4.17 | 4.16 | 13 | -- |
| 5 | 4.16 | 4.16 | 13 | -- |
| **For TNL-ITR18650-2000P** | | | | |
| **Samples charged at charging temperature upper limit (45°C)** | | | | |

| | | | | |
|---|---|---|---|---|
| 1 | 4.20 | 4.20 | 13 | -- |
| 2 | 4.20 | 4.20 | 13 | -- |
| 3 | 4.20 | 4.20 | 13 | -- |
| 4 | 4.20 | 4.20 | 13 | -- |
| 5 | 4.20 | 4.20 | 13 | -- |
| **Samples charged at charging temperature lower limit (-5°C)** | | | | |
| 1 | 4.15 | 4.15 | 13 | -- |
| 2 | 4.16 | 4.16 | 13 | -- |
| 3 | 4.16 | 4.16 | 13 | -- |
| 4 | 4.16 | 4.16 | 13 | -- |
| 5 | 4.16 | 4.15 | 13 | -- |
| **For TNL-ITR18650-1800F** | | | | |
| **Samples charged at charging temperature upper limit (45°C)** | | | | |
| 1 | 4.20 | 4.20 | 13 | -- |
| 2 | 4.20 | 4.18 | 13 | -- |
| 3 | 4.18 | 4.18 | 13 | -- |
| 4 | 4.19 | 4.19 | 13 | -- |
| 5 | 4.19 | 4.18 | 13 | -- |
| **Samples charged at charging temperature lower limit (-5°C)** | | | | |
| 1 | 4.15 | 4.15 | 13 | -- |
| 2 | 4.15 | 4.15 | 13 | -- |
| 3 | 4.15 | 4.15 | 13 | -- |
| 4 | 4.15 | 4.14 | 13 | -- |
| 5 | 4.15 | 4.14 | 13 | -- |
| **For TNL-ITR18650-P-1300** | | | | |
| **Samples charged at charging temperature upper limit (45° C)** | | | | |
| 1 | 4.21 | 4.21 | 13 | -- |
| 2 | 4.20 | 4.20 | 13 | -- |
| 3 | 4.20 | 4.20 | 13 | -- |
| 4 | 4.21 | 4.21 | 13 | -- |
| 5 | 4.21 | 4.21 | 13 | -- |
| **Samples charged at charging temperature lower limit (-5° C)** | | | | |
| 1 | 4.16 | 4.16 | 13 | -- |
| 2 | 4.16 | 4.16 | 13 | -- |
| 3 | 4.20 | 4.20 | 13 | -- |
| 4 | 4.17 | 4.16 | 13 | -- |
| 5 | 4.15 | 4.15 | 13 | -- |

| |
|---|
| **Supplementary information:**<br>- No fire or explosion |

| 7.3.6 | TABLE: Over-charging of battery | | N/A |
|---|---|---|---|
| **Constant charging current (A) .....:** | | | — |
| **Supply voltage (Vdc) .....:** | | | — |

| Sample no. | OCV before charging (Vdc) | Total charging time (minute) | Maximum outer case temperature (°C) | Results |
|---|---|---|---|---|
| | | | | |
| | | | | |
| | | | | |
| | | | | |
| | | | | |

| |
|---|
| **Supplementary information:**<br>- No fire or explosion |

| 7.3.7 | TABLE: Forced discharge (cells) | | | P |
|---|---|---|---|---|
| **Sample no.** | **OCV before application of reverse charge (Vdc)** | **Measured reverse charge $I_t$ (A)** | **Lower limit discharge voltage (Vdc)** | **Results** |
| **For TNL-ITR18650-3000F** | | | | |
| 1 | 3.21 | 3.0 | 90 | P |
| 2 | 3.21 | 3.0 | 90 | P |
| 3 | 3.19 | 3.0 | 90 | P |
| 4 | 3.20 | 3.0 | 90 | P |
| 5 | 3.18 | 3.0 | 90 | P |
| **For TNL-ITR18650-2400P** | | | | |
| 1 | 3.38 | 2.4 | 90 | P |
| 2 | 3.41 | 2.4 | 90 | P |
| 3 | 3.37 | 2.4 | 90 | P |
| 4 | 3.38 | 2.4 | 90 | P |
| 5 | 3.38 | 2.4 | 90 | P |
| **For TNL-ITR18650-2000P** | | | | |
| 1 | 3.12 | 2.0 | 90 | P |
| 2 | 3.13 | 2.0 | 90 | P |
| 3 | 3.14 | 2.0 | 90 | P |
| 4 | 3.12 | 2.0 | 90 | P |
| 5 | 3.12 | 2.0 | 90 | P |
| **For TNL-ITR18650-1800F** | | | | |

| | | | | |
|---|---|---|---|---|
| 1 | 3.37 | 1.8 | 90 | P |
| 2 | 3.45 | 1.8 | 90 | P |
| 3 | 3.45 | 1.8 | 90 | P |
| 4 | 3.45 | 1.8 | 90 | P |
| 5 | 3.38 | 1.8 | 90 | P |
| **For TNL-ITR18650-P-1300** | | | | |
| 1 | 3.27 | 1.3 | 90 | P |
| 2 | 3.27 | 1.3 | 90 | P |
| 3 | 3.16 | 1.3 | 90 | P |
| 4 | 3.24 | 1.3 | 90 | P |
| 5 | 3.26 | 1.3 | 90 | P |
| **Supplementary information:**<br>- No fire or explosion | | | | |

| **7.3.8.1** | **TABLE: Vibration** | | | | **N/A** |
|---|---|---|---|---|---|
| **Sample no.** | **OCV before test (Vdc)** | **OCV after test (Vdc)** | **Mass before test (g)** | **Mass after test (g)** | **Results** |
| | | | | | |
| | | | | | |
| | | | | | |
| **Supplementary information:**<br>- No fire or explosion<br>- No rupture<br>- No leakage<br>- No venting | | | | | |

| **7.3.8.2** | **TABLE: Mechanical shock** | | | | **N/A** |
|---|---|---|---|---|---|
| **Sample no.** | **OCV before test (Vdc)** | **OCV after test (Vdc)** | **Mass before test (g)** | **Mass after test (g)** | **Results** |
| | | | | | |
| | | | | | |
| | | | | | |
| **Supplementary information:**<br>- No fire or explosion<br>- No rupture<br>- No leakage<br>- No venting | | | | | |

| **7.3.9** | **TABLE: Forced internal short circuit (cells)** | | | | **P** |
|---|---|---|---|---|---|
| **Sample no.** | **Chamber ambient T (°C)** | **OCV before test (Vdc)** | **Particle location [1)]** | **Maximum applied pressure (N)** | **Results** |

| | | | | | |
|---|---|---|---|---|---|
| **For TNL-ITR18650-3000F** | | | | | |
| **Samples charged at charging temperature upper limit (45°C)** | | | | | |
| 1 | 45 | 4.17 | 1 | 800 | 0 |
| 2 | 45 | 4.17 | 1 | 800 | 0 |
| 3 | 45 | 4.17 | 1 | 800 | 5 |
| 4 | 45 | 4.17 | 2 | 800 | 0 |
| 5 | 45 | 4.17 | 2 | 800 | 0 |
| **Samples charged at charging temperature lower limit (-5°C)** | | | | | |
| 6 | 10 | 4.06 | 1 | 800 | 0 |
| 7 | 10 | 4.05 | 1 | 800 | 0 |
| 8 | 10 | 4.04 | 1 | 800 | 1 |
| 9 | 10 | 4.04 | 2 | 800 | 0 |
| 10 | 10 | 4.06 | 2 | 800 | 0 |
| **For TNL-ITR18650-2400P** | | | | | |
| **Samples charged at charging temperature upper limit (45°C)** | | | | | |
| 1 | 45 | 4.20 | 1 | 800 | 0 |
| 2 | 45 | 4.20 | 1 | 800 | 0 |
| 3 | 45 | 4.20 | 1 | 800 | 0 |
| 4 | 45 | 4.21 | 2 | 800 | 0 |
| 5 | 45 | 4.20 | 2 | 800 | 0 |
| **Samples charged at charging temperature lower limit (-5°C)** | | | | | |
| 6 | 10 | 4.09 | 1 | 800 | 0 |
| 7 | 10 | 4.08 | 1 | 800 | 0 |
| 8 | 10 | 4.06 | 1 | 800 | 0 |
| 9 | 10 | 4.08 | 2 | 800 | 0 |
| 10 | 10 | 4.08 | 2 | 800 | 0 |
| **For TNL-ITR18650-2000P** | | | | | |
| **Samples charged at charging temperature upper limit (45°C)** | | | | | |
| 1 | 45 | 4.19 | 1 | 800 | 0 |
| 2 | 45 | 4.19 | 1 | 800 | 0 |
| 3 | 45 | 4.18 | 1 | 800 | 0 |
| 4 | 45 | 4.19 | 2 | 800 | 0 |
| 1 | 45 | 4.19 | 1 | 800 | 0 |
| **Samples charged at charging temperature lower limit (-5°C)** | | | | | |
| 6 | 10 | 4.05 | 1 | 800 | 0 |
| 7 | 10 | 4.05 | 1 | 800 | 0 |
| 8 | 10 | 4.05 | 1 | 800 | 0 |
| 9 | 10 | 4.05 | 2 | 800 | 0 |

| | | | | | |
|---|---|---|---|---|---|
| 10 | 10 | 4.05 | 2 | 800 | 0 |
| **For TNL-ITR18650-1800P** | | | | | |
| **Samples charged at charging temperature upper limit (45°C)** | | | | | |
| 1 | 45 | 4.20 | 1 | 800 | 0 |
| 2 | 45 | 4.19 | 1 | 800 | 0 |
| 3 | 45 | 4.19 | 1 | 800 | 1 |
| 4 | 45 | 4.20 | 1 | 800 | 3 |
| 5 | 45 | 4.20 | 1 | 800 | 0 |
| **Samples charged at charging temperature lower limit (-5°C)** | | | | | |
| 6 | 10 | 4.14 | 1 | 800 | 0 |
| 7 | 10 | 4.14 | 1 | 800 | 2 |
| 8 | 10 | 4.14 | 1 | 800 | 1 |
| 9 | 10 | 4.14 | 1 | 800 | 0 |
| 10 | 10 | 4.14 | 1 | 800 | 5 |
| **For TNL-ITR18650-P-1300** | | | | | |
| **Samples charged at charging temperature upper limit (45°C)** | | | | | |
| 1 | 45 | 4.20 | 1 | 800 | 0 |
| 2 | 45 | 4.19 | 1 | 800 | 3 |
| 3 | 45 | 4.20 | 1 | 800 | 2 |
| 4 | 45 | 4.20 | 2 | 800 | 0 |
| 5 | 45 | 4.20 | 2 | 800 | 5 |
| **Samples charged at charging temperature lower limit (-5°C)** | | | | | |
| 6 | 10 | 4.13 | 1 | 800 | 0 |
| 7 | 10 | 4.13 | 1 | 800 | 0 |
| 8 | 10 | 4.15 | 1 | 800 | 1 |
| 9 | 10 | 4.14 | 2 | 800 | 1 |
| 10 | 10 | 4.16 | 2 | 800 | 0 |

**Supplementary information:**

[1)] Identify one of the following:

1: Nickel particle inserted between positive and negative (active material) coated area.

2: Nickel particle inserted between positive aluminium foil and negative active material coated area.

- No fire or explosion

| D.2 | TABLE: Internal AC resistance for coin cells | | | N/A |
|---|---|---|---|---|
| **Sample no.** | **Ambient T (°C)** | **Store time (h)** | **Resistance Rac (Ω)** | **Results [1)]** |
| | | | | |

**Supplementary information:**

[1)] Coin cells with internal resistance less than or equal to 3 Ω, see test result on corresponding tables

**-- End of Report --**

| National Difference | | | |
|---|---|---|---|
| Consumer Goods | Requirement + Test | Result - Remark | Verdict |

| **ATTACHMENT TO TEST REPORT IEC 62133 (Ed 2.0)<br>SINGAPORE NATIONAL DIFFERENCES** | |
|---|---|
| **Differences according to**.....: | Consumer Protection (Consumer Goods Safety Requirements) Regulations [CGSR] as detailed in Appendix F Additional Safety Requirements Imposed by SPRING Singapore as the Safety Authority |
| **Attachment Form No**.....: | SG_ND_IEC62133B |
| **Attachment Originator .....**: | TÜV Rheinland (Shenzhen) Co., Ltd. |
| **Master Attachment**.....: | Date 2015-08 |

| | | | |
|---|---|---|---|
| Portable power banks[1] | **1 Portable power banks shall comply with the requirements of the following safety standards:**<br><br>1.1 IEC 62133:2012 Secondary cells and batteries containing alkaline or non-acid electrolytes – Safety requirements for portable sealed secondary cells, and for batteries made from them, for use in portable applications; and<br>1.2 IEC 60950-1:2005+A1:2009+A2:2013 Information technology equipment – Safety – Part 1: General requirements<br>OR<br>1.3 Any other industry standard specific to power banks<br><br>**2 Portable power banks shall be supplied with the following safety information:**<br>2.1 'Minimum Instructions for use' as specified below<br>2.2 Instructions on how to charge the portable power bank<br>2.3 Information on the minimum and maximum operating temperatures of the portable power bank | Not power bank. | N/A |

| National Difference | | | |
|---|---|---|---|
| Consumer Goods | Requirement + Test | Result - Remark | Verdict |
| | **Minimum Instructions[2] for Use for Portable Power Banks** to be provided with portable power banks to the customer<br>a) The power bank will generate heat when charging. Always charge in a well ventilated area. Do not charge under pillows, blankets or on flammable surfaces.<br>b) Keep the power bank away from heat sources, direct sunlight, combustible gas, humidity, water or other liquids.<br>c) Do not disassemble, open, microwave, incinerate, paint or insert foreign objects into the power bank.<br>d) Do not subject the power bank to mechanical shock such as crushing, bending, puncturing or shredding. Avoid dropping or placing heavy object on the power bank.<br>e) Do not short-circuit the power bank or store it in a receptacle where it may be short-circuited by other metallic or conductive objects.<br>f) Do not operate the power bank if it has been wet or otherwise damaged, to prevent against electric shock, explosion and/or injury. Contact the dealer or authorized agent.<br>g) Power bank usage by children should be supervised.<br>h) Please read the operating instructions (including charging instructions and information on the minimum and maximum operating temperatures), supplied with this power bank. | | N/A |

| National Difference | | | |
|---|---|---|---|
| Consumer Goods | Requirement + Test | Result - Remark | Verdict |

| **ATTACHMENT TO TEST REPORT IEC 62133 (Ed 2.0)<br>CANADA NATIONAL DIFFERENCES** | | | |
|---|---|---|---|
| **Differences according to**.....: | CAN/CSA-E62133:13 | | |
| **Attachment Form No**.....: | CA_ND_IEC62133B | | |
| **Attachment Originator .....**: | TÜV Rheinland (Shenzhen) Co., Ltd. | | |
| **Master Attachment**.....: | Date 2012-12 | | |
| 1 | *[Add the following]*<br>This Standard covers secondary cells and batteries that are intended to be installed or used in accordance with CSA C22.1, *Canadian Electrical Code, Part I*. | | P |
| 2 | **2 Normative references**<br>*[Add the following]*<br>Where reference is made to CSA Group publications, such reference shall be considered to refer to the latest edition and all amendments published to that edition. This Standard refers to the following publications, and the years shown indicate the latest editions available at the time of printing:<br>**CSA Group**<br>C22.1-12<br>*Canadian Electrical Code, Part I*<br>CAN/CSA-C22.2 No. 0-10<br>*General requirements — Canadian Electrical Code, Part II*<br>C22.2 No. 0.15-01 (R2012)<br>*Adhesive labels*<br>CAN/CSA-C22.2 No. 0.17-00 (R2013)<br>*Evaluation of properties of polymeric materials*<br>C22.2 No. 39-12<br>*Fuseholder assemblies*<br>C22.2 No. 127-09<br>*Equipment and lead wires*<br>CAN/CSA-C22.2 No. 198.1-06 (R2010)<br>*Extruded insulating tubing*<br>C22.2 No. 235-04 (R2013)<br>*Supplementary protectors*<br>Certification Informs, Component Acceptance Service No. 53 (January 2013)<br>*Positive temperature coefficient (PTC) thermistors* | | P |

| National Difference | | | |
|---|---|---|---|
| Consumer Goods | Requirement + Test | Result - Remark | Verdict |
| 3A | *[Add the following clause]*<br>**3A General requirements**<br>General requirements applicable to these products are provided in CAN/CSA-C22.2 No. 0. | | P |
| 5 | **5 General safety considerations**<br>**5.1 General**<br>*[Add the following at the end of Clause 5.1]*<br>All safety components shall be suitable for use in accordance with the applicable CSA Group Standards where available.<br>Examples of such components and subassemblies are as follows:<br>a) wiring in accordance with CSA C22.2 No. 127;<br>b) insulation tubing in accordance with CAN/CSA-C22.2 No. 198.1;<br>c) protection devices such as fuses in accordance with CSA C22.2 No. 235, and PTC thermistors in accordance with CSA Component Acceptance Service No. 53;<br>d) fuseholders in accordance with CSA C22.2 No. 39; and<br>e) printed wiring boards and outer plastic enclosures shall be flammability rated a minimum of V-1 in accordance with CAN/CSA-C22.2 No. 0.17. | | N/A |
| 10 | **10 Marking**<br>**10.1 Cell marking**<br>*[Add the following after the first paragraph]*<br>Cell marking shall also include the model or type number.<br>Cautions and warnings shall be in English and French in accordance with CAN/CSA-C22.2 No. 0. If external labels are used, they shall be a suitable type in accordance with CSA C22.2 No. 0.15.<br>**10.2 Battery marking**<br>*[Add the following after the first paragraph]*<br>Cautions and warnings shall be in English and French in accordance with CAN/CSA-C22.2 No. 0. If external labels are used, they shall be a suitable type in accordance with CSA C22.2 No. 0.15. | Cell marking include the model or type number. | P |

Product: Rechargeable Li-ion Cell

Type Designation: See test report




**Figure 1: TNL-ITR18650-3000F**

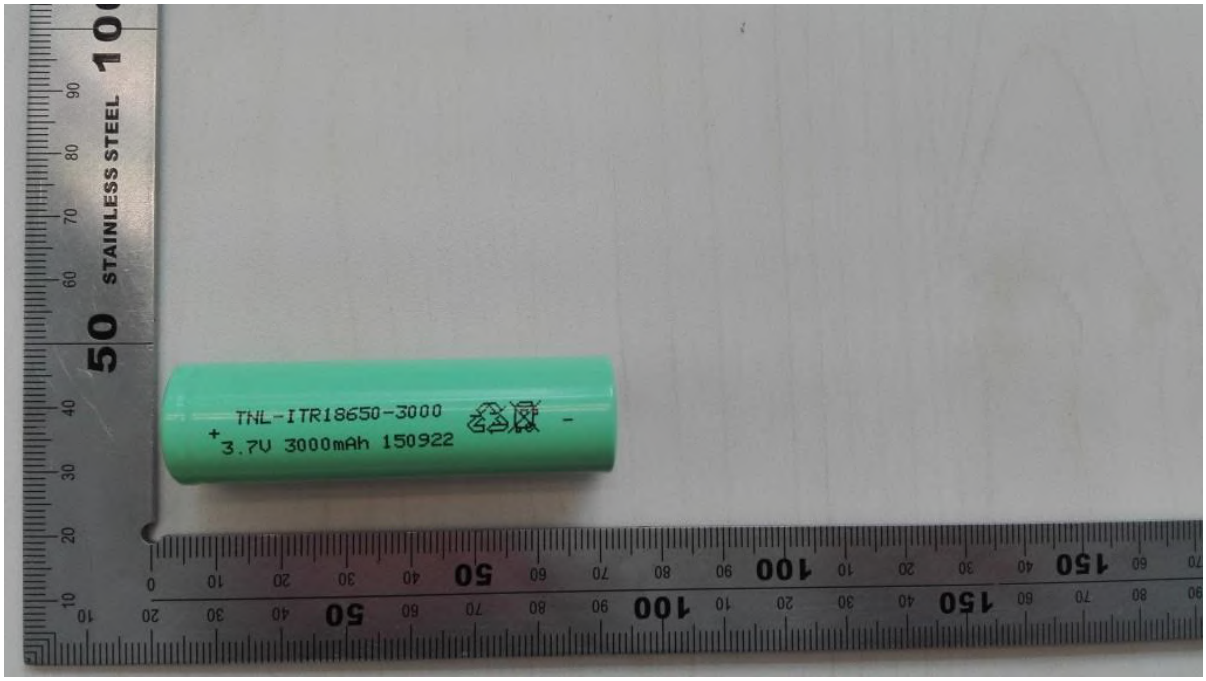


**Figure 2: TNL-ITR18650-3000F**

Product: Rechargeable Li-ion Cell

Type Designation: See test report




**Figure 3: TNL-ITR18650-2400P**




**Figure 4: TNL-ITR18650-2400P**

Product: Rechargeable Li-ion Cell

Type Designation: See test report




**Figure 5: TNL-ITR18650-2000P & TNL-ITR18650-2000F**

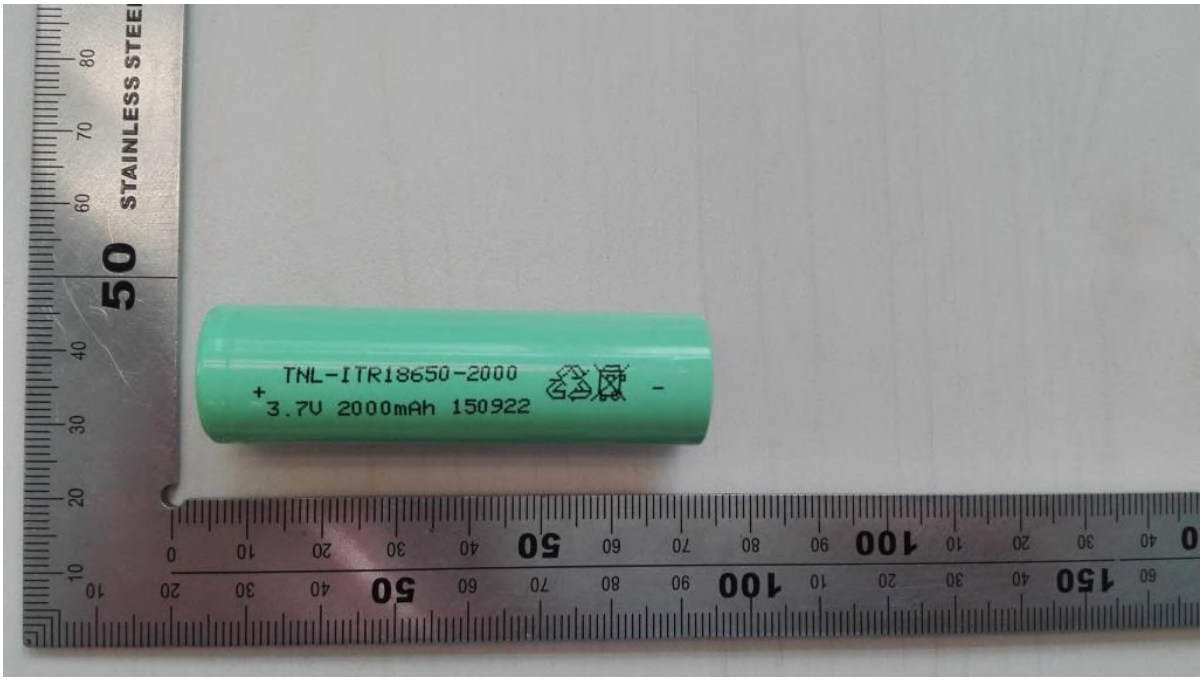


**Figure 6: TNL-ITR18650-2000P & TNL-ITR18650-2000F**

Product: Rechargeable Li-ion Cell

Type Designation: See test report

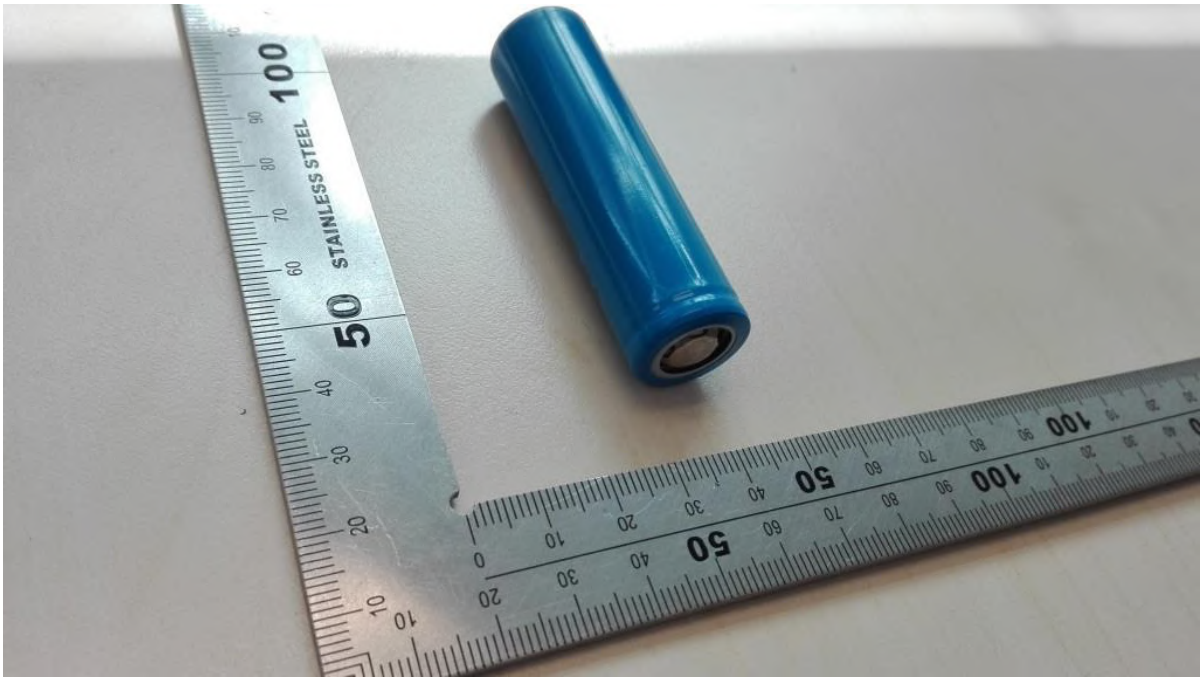


**Figure 7: TNL-ITR18650-1800F**




**Figure 8: TNL-ITR18650-1800F**

Product: Rechargeable Li-ion Cell

Type Designation: See test report

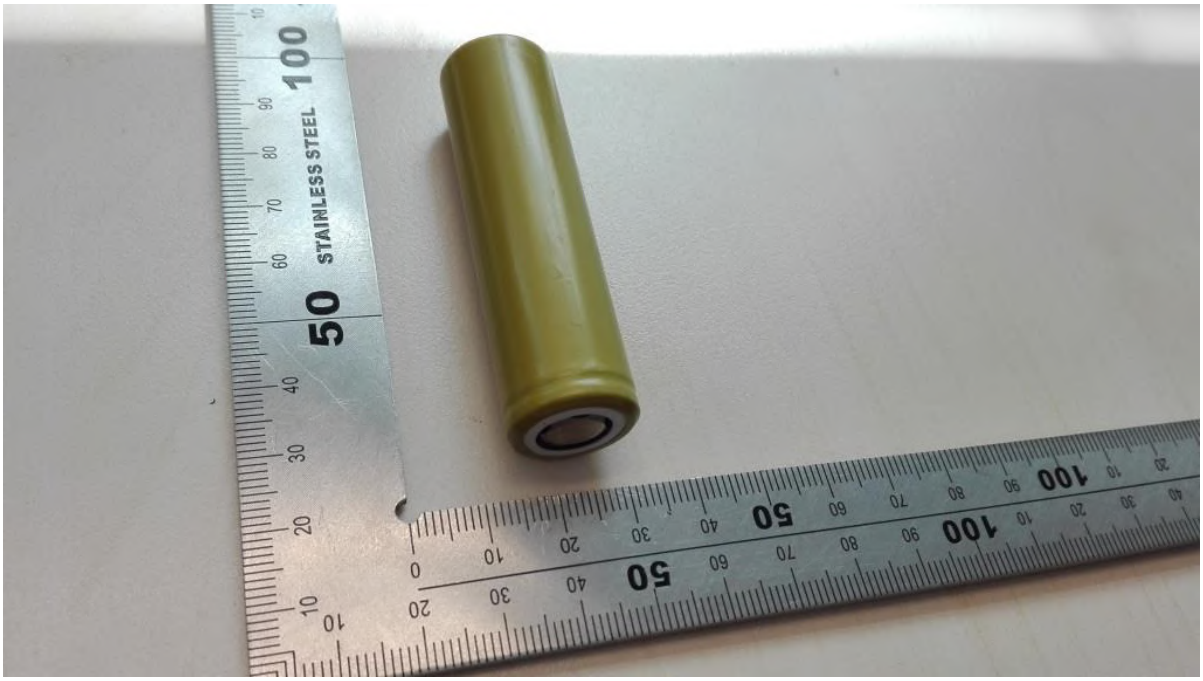


**Figure 9: TNL-ITR18650-P-1300**




**Figure 10: TNL-ITR18650-P-1300**

**Remark:** The pictures of cells only shown the models TNL-ITR18650-3000F, TNL-ITR18650-2400P, TNL-ITR18650-2000P, TNL-ITR18650-1800F and TNL-ITR18650-P-1300, other models are identical except appearance color, model name and rated capacity.