	Ref. Certif. No.
IEC IECEE CB SCHEME	JPTUV-067483

IEC SYSTEM FOR MUTUAL RECOGNITION OF TEST CERTIFICATES FOR ELECTRICAL EQUIPMENT (IECEE) CB SCHEME

SYSTEME CEI D'ACCEPTATION MUTUELLE DE CERTIFICATS D ESSAIS DES EQUIPEMENTS ELECTRIQUES (IECEE) METHODE OC

CB TEST CERTIFICATE

CERTIFICAT D'ESSAI OC

Product Produit	Rechargeable Li-ion Cell
Name and address of the applicant Nom et adresse du demandeur	ZHEJIANG TIANNENG ENERGY TECHNOLOGY CO.,LTD. Zhicheng Industrial Zone, Changxing County, Zhejiang 313100, P.R. China
Name and address of the manufacturer Nom et adresse du fabricant	ZHEJIANG TIANNENG ENERGY TECHNOLOGY CO.,LTD. Zhicheng Industrial Zone, Changxing County, Zhejiang 313100, P.R. China
Name and address of the factory Nom et adresse de l'usine	ZHEJIANG TIANNENG ENERGY TECHNOLOGY CO.,LTD. Zhicheng Industrial Zone, Changxing County, Zhejiang 313100, P R. China
Ratings and principal characteristics Valeurs nominales et charactéristiques principales	See test report
Trademark (if any) Marque de fabrique (si elle existe)	
Type of Manufacturer's Testing Laboratories used Type de programme du laboratoire d'essais constructeur	N/A
Model / Type Ref. Ref. de type	See test report
Additional information (if necessary may also be reported on page 2) Les informations complémentaires (si nécessaire, peuvent être indiqués sur la 2ème page)	For model differences, refer to test report
A sample of the product was tested and found to be in conformity with Un échantillon de ce produit a été essayé et a été considéré conforme à la	IEC 62133:2012 National differences see test report
As shown in the Test Report Ref. No. which forms part of this Certificate Comme indiqué dans le Rapport d'essais numéro de référence qui constitue partie de ce Certificat	17050122 001

This CB Test Certificate is issued by the National Certification Body
Ce Certificat d'essai OC est établi par l'Organisme National de Certification

TÜVRheinland®

TÜV Rheinland Japan Ltd.
Global Technology Assessment Center
4-25-2 Kita-Yamata, Tsuzuki-ku
Yokohama 224-0021 Japan
Phone + 81 45 914-3888
Fax + 81 45 914-3354
Mail: info@jpn.tuv.com
Web: www.tuv.com

Date: 13.11.2015

Signature: Dipl.-Ing. (FH) C. Padel

Test Report issued under the responsibility of:

TÜVRheinland®

TEST REPORT
IEC 62133
Secondary cells and batteries containing alkaline or other non-acid electrolytes – Safety requirements for portable sealed secondary cells, and for batteries made from them, for use in portable applications

Report Number. .....:	17050122 001
Date of issue .....:	2015-11-13
Total number of pages.....	33 pages
Applicant's name.....:	ZHEJIANG TIANNENG ENERGY TECHNOLOGY CO.,LTD.
Address .....:	Zhicheng Industrial Zone, Changxing County, Zhejiang 313100, P.R. China
Test specification:	
Standard .....:	IEC 62133: 2012 (Second Edition)
Test procedure .....:	CB Scheme
Non-standard test method.....:	N/A
Test Report Form No.....:	IEC62133B
Test Report Form(s) Originator ....:	UL(Demko)
Master TRF .....:	Dated 2013-03

Copyright © 2013 Worldwide System for Conformity Testing and Certification of Electrotechnical Equipment and Components (IECEE), Geneva, Switzerland. All rights reserved.

This publication may be reproduced in whole or in part for non-commercial purposes as long as the IECEE is acknowledged as copyright owner and source of the material. IECEE takes no responsibility for and will not assume liability for damages resulting from the reader's interpretation of the reproduced material due to its placement and context.

If this Test Report Form is used by non-IECEE members, the IECEE/IEC logo and the reference to the CB Scheme procedure shall be removed.

This report is not valid as a CB Test Report unless signed by an approved CB Testing Laboratory and appended to a CB Test Certificate issued by an NCB in accordance with IECEE 02.

Test item description .....:	Rechargeable Li-ion Cell
Trade Mark .....:	N/A
Manufacturer.....:	Same as applicant
Address .....:	Same as applicant
Model/Type reference .....:	1) TNL-ITR18650-P-1300, 2) TNL-ITR18650-P-1500, 3) TNL-ITR18650-1800F, 4) TNL-ITR18650-2000P, 5) TNL-ITR18650-2000F, 6) TNL-ITR18650-2200P, 7) TNL-ITR18650-2200F, 8) TNL-ITR18650-2200E 9) TNL-ITR18650-2400P, 10) TNL-ITR18650-2500F, 11) TNL-ITR18650-2600P, 12) TNL-ITR18650-2800F, 13) TNL-ITR18650-2900F, 14) TNL-ITR18650-3000F
Ratings .....:	See page 6 and page 7.

Testing procedure and testing location:		
☒ **CB Testing Laboratory:**	TÜV Rheinland (Shenzhen) Co., Ltd.	
Testing location/ address .....:	East of F/1, F/2~F/4, Building 1, Cybio Technology Building No. 6 Langshan No.2 Road, North Hi-tech Industry Park 518057 Shenzhen Nanshan District CHINA	
☐ **Associated CB Testing Laboratory:**		
Testing location/ address .....:		
Tested by (name + signature).....:	Jason Tang	Jason Tang
Approved by (name + signature) .....:	Jacob Lu	Jacob Lu
☐ **Testing procedure: TMP**		
Testing location/ address .....:		
Tested by (name + signature).....:		
Approved by (name + signature) .....:		
☐ **Testing procedure: WMT**		
Testing location/ address .....:		
Tested by (name + signature).....:		
Witnessed by (name + signature) ....:		
Approved by (name + signature) .....:		
☐ **Testing procedure: SMT**		
Testing location/ address .....:		
Tested by (name + signature).....:		
Approved by (name + signature) .....:		
Supervised by (name + signature)...:		

List of Attachments (including a total number of pages in each attachment):

Attachment 1: Photo documentation (5 pages).

Summary of testing:

Tests performed (name of test and test clause):	**Testing location:**
cl.5.6.2 Design recommendation(Lithium system); cl.8.1 Charging procedure for test purposes (for Cell); cl.8.2.1 Continuous charging at constant voltage (Cells); cl.8.3.1 External short circuit (Cell); cl.8.3.3 Free fall (for Cell); cl.8.3.4 Thermal abuse (Cells); cl.8.3.5 Crush (Cells); cl.8.3.7 Forced discharge (Cells); cl.8.3.8 Transport tests (Cells); cl.8.3.9 Forced internal short circuit (Cells) Tests are made with the number of cells specified in IEC 62133: 2012 (Second Edition) Table 2.	**TÜV Rheinland (Shenzhen) Co., Ltd.** East of F/1, F/2~F/4, Building 1, Cybio Technology Building No. 6 Langshan No.2 Road, North Hi-tech Industry Park 518057 Shenzhen Nanshan District CHINA

Summary of compliance with National Differences:

BE, BY, CH, CN, DE, DK, FI, FR, GB, HU, JP, KR, NL, NO, SE, SG
BE=Belgium, BY=Belarus, CH=Switzerland, CN=China, DE=Germany, DK=Denmark, FI=Finland, FR=France, GB=United Kingdom, HU=Hungary, JP=Japan, KR=Republic of Korea, NL=The Netherlands, NO=Norway, SE=Sweden, SG=Singapore.

☒**The product fulfils the requirements of EN62133: 2013**

Copy of marking plates:

The artwork below may be only a draft. The use of certification marks on a product must be authorized by the respective NCBs that own these marks.

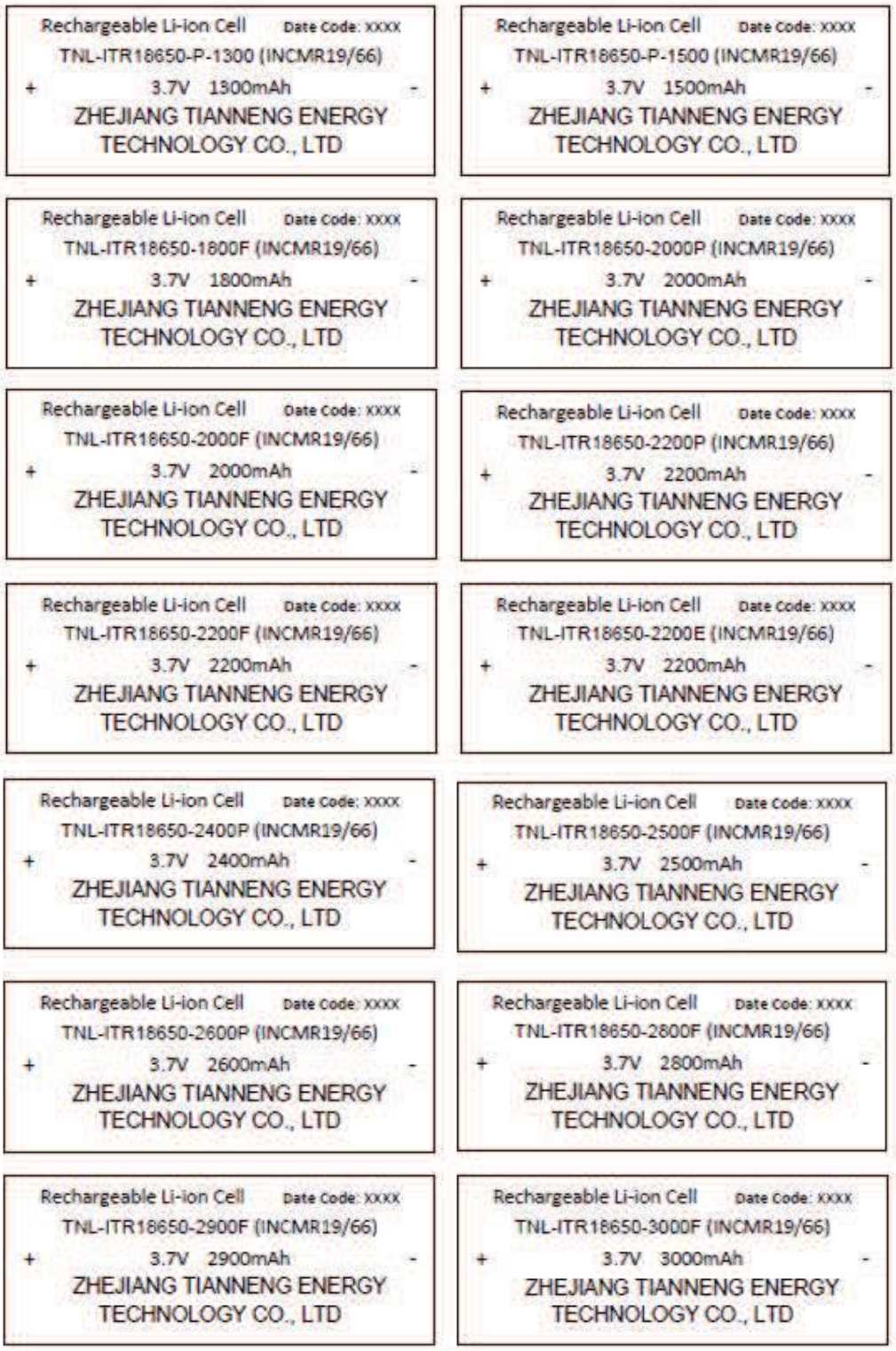

Test item particulars.....:	
Classification of installation and use.....:	N/A
Supply connection.....:	DC terminal
Recommend charging method declared by the manufacturer ..... :	See page 6 and page 7
Discharge current (0,2 I_t A) ..... :	See page 6 and page 7
Specified final voltage ..... :	See page 6 and page 7
Chemistry ..... :	☐ nickel systems ..... ☒ lithium systems
Recommend of charging limit for lithium system	
Upper limit charging voltage per cell.....:	4.25V
Maximum charging current .....:	See page 6 and page 7
Charging temperature upper limit .....:	See page 7
Charging temperature lower limit.....:	See page 7
Polymer cell electrolyte type ..... :	☐ gel polymer ☐ solid polymer ☒ N/A
Possible test case verdicts:	
- test case does not apply to the test object.....:	N/A
- test object does meet the requirement.....:	P (Pass)
- test object does not meet the requirement.....:	F (Fail)
Testing.....:	
Date of receipt of test item .....:	2015-06-29
Date (s) of performance of tests .....:	2015-10-08 to 2015-11-11

General remarks:

The test results presented in this report relate only to the object tested.
This report shall not be reproduced, except in full, without the written approval of the Issuing testing laboratory.
"(See Enclosure #)" refers to additional information appended to the report.
"(See appended table)" refers to a table appended to the report.
Throughout this report a ☐ comma / ☒ point is used as the decimal separator.

Manufacturer's Declaration per sub-clause 4.2.5 of IECEE 02:

The application for obtaining a CB Test Certificate includes more than one factory location and a declaration from the Manufacturer stating that the sample(s) submitted for evaluation is (are) representative of the products from each factory has been provided ..... :	☐ **Yes** ☒ **Not applicable**

When differences exist; they shall be identified in the General product information section.

Name and address of factory (ies) ..... :	Same as applicant

General product information:

The cell consists of the positive electrode plate, negative electrode plate, separator, electrolyte and case. The positive and negative electrode plates are housed in the case in the state being separated by separator.

The model of TNL-ITR18650-2000F is identical with TNL-ITR18650-2000P except model name for different customer; the model of TNL-ITR18650-2200F & TNL-ITR18650-2200E is identical with TNL-ITR18650-2200P except model name for different customer.

These models cell are identical except capacity and model name, the models of TNL-ITR18650-3000F, TNL-ITR18650-2400P, TNL-ITR18650-2000P, TNL-ITR18650-1800F, and TNL-ITR18650-P-1300 were selected to be test.

The main features of the cell is shown as below (clause 8.1.1):

Model	Nominal capacity	Nominal voltage	Nominal Charge Current	Nominal Discharge Current	Maximum Charge Current	Maximum Discharge Current	Maximum Charge Voltage	Cut-off Voltage
TNL-ITR18650-P-1300	1300mAh	3.7V	1300mA	1300mA	1300mA	20.0A	4.2V	2.5V
TNL-ITR18650-P-1500	1500mAh	3.7V	1500mA	1500mA	1500mA	20.0A	4.2V	2.5V
TNL-ITR18650-1800F	1800mAh	3.7V	360mA	360mA	900mA	3600mA	4.2V	2.75V
TNL-ITR18650-2000P or TNL-ITR18650-2000F	2000mAh	3.7V	1000mA	2000mA	1000mA	8000mA	4.2V	2.75V
TNL-ITR18650-2200P or TNL-ITR18650-2200F or TNL-ITR18650-2200E	2200mAh	3.7V	1100mA	1100mA	2200mA	8800mA	4.2V	2.75V
TNL-ITR18650-2400P	2400mAh	3.7V	480mA	1200mA	1200mA	7200mA	4.2V	2.75V
TNL-ITR18650-2500F	2500mAh	3.7V	500mA	500mA	1250mA	5000mA	4.2V	2.75
TNL-ITR18650-2600P	2600mAh	3.7V	1300mA	1300mA	2600mA	7800mA	4.2V	2.75
TNL-ITR18650-2800F	2800mAh	3.7V	560mA	560mA	1400mA	5600mA	4.2V	2.75
TNL-ITR18650-2900F	2900mAh	3.7V	580mA	580mA	1450mA	2900mA	4.2V	2.75
TNL-ITR18650-3000F	3000mAh	3.7V	600mA	600mA	1500mA	3000mA	4.2V	2.75

Continued: (Clause 8.1.2)

Model	Upper limit charge voltage	Taper-off current	Lower charge temperature	Upper charge temperature
TNL-ITR18650-P-1300	4.25V	65mA	0°C	40°C
TNL-ITR18650-P-1500	4.25V	75mA	0°C	40°C
TNL-ITR18650-1800F	4.25V	90mA	0°C	40°C
TNL-ITR18650-2000P or TNL-ITR18650-2000F	4.25V	100mA	0°C	45°C
TNL-ITR18650-2200P or TNL-ITR18650-2200F & TNL-ITR18650-2200E	4.25V	110mA	0°C	45°C
TNL-ITR18650-2400P	4.25V	120mA	0°C	45°C
TNL-ITR18650-2500F	4.25V	125mA	0°C	40°C
TNL-ITR18650-2600P	4.25V	130mA	0°C	45°C
TNL-ITR18650-2800F	4.25V	140mA	0°C	40°C
TNL-ITR18650-2900F	4.25V	145mA	0°C	40°C
TNL-ITR18650-3000F	4.25V	150mA	0°C	40°C

Circuit Diagram:

None, Cell only.

Construction:

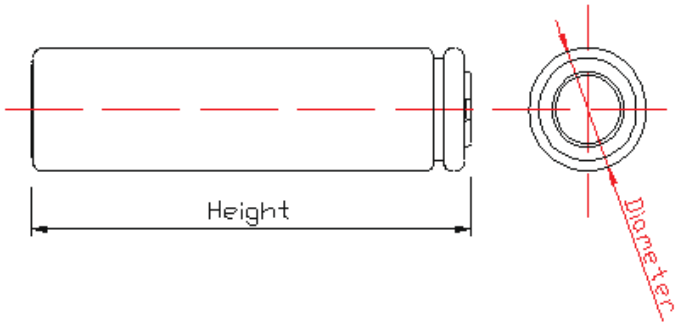

Height	65.0 ± 0.3mm	Diameter	TNL-ITR18650-P-1300	18.2 ± 0.2mm
			TNL-ITR18650-P-1500	
			TNL-ITR18650-1800F	
			TNL-ITR18650-2000P or TNL-ITR18650-2000F	
			TNL-ITR18650-2200P or TNL-ITR18650-2200F or TNL-ITR18650-2200E	
			TNL-ITR18650-2400P	
			TNL-ITR18650-2600P	
			TNL-ITR18650-2500F	18.3 ± 0.2mm
			TNL-ITR18650-2800F	
			TNL-ITR18650-2900F	
			TNL-ITR18650-3000F	

IEC 62133: 2012			
Clause	Requirement + Test	Result - Remark	Verdict
4	**Parameter measurement tolerances**		P
	Parameter measurement tolerances		P
5	**General safety considerations**		P
5.1	General		P
5.2	Insulation and wiring		P
	The insulation resistance between the positive terminal and externally exposed metal surfaces of the battery (excluding electrical contact surfaces) is not less than 5 MΩ	Cell case is the negative pole	N/A
	Insulation resistance (MΩ) ..... :		—
	Internal wiring and insulation are sufficient to withstand maximum anticipated current, voltage and temperature requirements		P
	Orientation of wiring maintains adequate creepage and clearance distances between conductors		P
	Mechanical integrity of internal connections accommodates reasonably foreseeable misuse		P
5.3	Venting		P
	Battery cases and cells incorporate a pressure relief mechanism or are constructed so that they relieve excessive internal pressure at a value and rate that will preclude rupture, explosion and self-ignition	Venting mechanism exists on the cylindrical cell.	P
	Encapsulation used to support cells within an outer casing does not cause the battery to overheat during normal operation nor inhibit pressure relief		N/A
5.4	Temperature/voltage/current management	Cell only.	N/A
	Batteries are designed such that abnormal temperature rise conditions are prevented		N/A
	Batteries are designed to be within temperature, voltage and current limits specified by the cell manufacturer		N/A
	Batteries are provided with specifications and charging instructions for equipment manufacturers so that associated chargers are designed to maintain charging within the temperature, voltage and current limits specified		N/A
5.5	Terminal contacts		P
	Terminals have a clear polarity marking on the external surface of the battery	The “+” and “-” polarity explicitly marked on marking plate of the cell. See page 4.	P

IEC 62133: 2012			
Clause	Requirement + Test	Result - Remark	Verdict
	The size and shape of the terminal contacts ensure that they can carry the maximum anticipated current		P
	External terminal contact surfaces are formed from conductive materials with good mechanical strength and corrosion resistance		P
	Terminal contacts are arranged to minimize the risk of short circuits		P
5.6	Assembly of cells into batteries	Cell only.	N/A
5.6.1	If there is more than one battery housed in a single battery case, cells used in the assembly of each battery have closely matched capacities, be of the same design, be of the same chemistry and be from the same manufacturer		N/A
	Each battery has an independent control and protection		N/A
	Manufacturers of cells make recommendations about current, voltage and temperature limits so that the battery manufacturer/designer may ensure proper design and assembly		N/A
	Batteries that are designed for the selective discharge of a portion of their series connected cells incorporate separate circuitry to prevent the cell reversal caused by uneven discharges		N/A
	Protective circuit components are added as appropriate and consideration given to the end-device application		N/A
	When testing a battery, the manufacturer of the battery provides a test report confirming the compliance according to this standard		N/A
5.6.2	Design recommendation for lithium systems only	Cell only.	N/A
	For the battery consisting of a single cell or a single cellblock: - Charging voltage of the cell does not exceed the upper limit of the charging voltage specified in Clause 8.1.2, Table 4; or		N/A
	- Charging voltage of the cell does not exceed the different upper limit of the charging voltage determined through Clause 8.1.2, NOTE 1.		N/A
	For the battery consisting of series-connected plural single cells or series-connected plural cellblocks: - The voltages of any one of the single cells or single cellblocks does not exceed the upper limit of the charging voltage, specified in Clause 8.1.2, Table 4, by monitoring the voltage of every single cell or the single cellblocks; or		N/A

IEC 62133: 2012			
Clause	Requirement + Test	Result - Remark	Verdict
	- The voltages of any one of the single cells or single cellblocks does not exceed the different upper limit of the charging voltage, determined through Clause 8.1.2, NOTE 1, by monitoring the voltage of every single cell or the single cellblocks		N/A
	For the battery consisting of series-connected plural single cells or series-connected plural cellblocks: - Charging is stopped when the upper limit of the charging voltage, specified in Clause 8.1.2, Table 4, is exceeded for any one of the single cells or single cellblocks by measuring the voltage of every single cell or the single cellblocks; or		N/A
	- Charging is stopped when the upper limit of the different charging voltage, determined through Clause 8.1.2, NOTE 1, is exceeded for any one of the single cells or single cellblocks by measuring the voltage of every single cell or the single cellblocks		N/A
5.7	Quality plan		P
	The manufacturer prepares and implements a quality plan that defines procedures for the inspection of materials, components, cells and batteries and which covers the whole process of producing each type of cell or battery	Complied. ISO 9001: 2008 certificate provided.	P
6	**Type test conditions**		**P**
	Tests were made with the number of cells or batteries specified in Table 1 for nickel-cadmium and nickel-metal hydride systems and Table 2 for lithium systems, using cells or batteries that are not more than six months old.	Complied. Lithium system.	P
	Unless noted otherwise in the test methods, testing was conducted in an ambient of 20°C ± 5°C.	Tests are carried out at 20°C ± 5°C.	P
7	**Specific requirements and tests (nickel systems)**		**N/A**
7.1	Charging procedure for test purposes	Lithium system.	N/A
7.2	Intended use		N/A
7.2.1	Continuous low-rate charging (cells)		N/A
	Results: No fire. No explosion		N/A
7.2.2	Vibration		N/A
	Results: No fire. No explosion. No leakage	(See Table 7.2.2)	N/A
7.2.3	Moulded case stress at high ambient temperature		N/A
	Oven temperature (°C)..... :		—

IEC 62133: 2012			
Clause	Requirement + Test	Result - Remark	Verdict
	Results: No physical distortion of the battery casing resulting in exposure if internal components		N/A
7.2.4	Temperature cycling		N/A
	Results: No fire. No explosion. No leakage.		N/A
7.3	Reasonably foreseeable misuse		N/A
7.3.1	Incorrect installation cell		N/A
	The test was carried out using: - Four fully charged cells of the same brand, type, size and age connected in series, with one of them reversed; or		N/A
	- A stabilized dc power supply.		N/A
	Results: No fire. No explosion..... :	(See Table 7.3.1)	N/A
7.3.2	External short circuit		N/A
	The cells or batteries were tested until one of the following occurred: - 24 hours elapsed; or		N/A
	- The case temperature declined by 20% of the maximum temperature rise		N/A
	Results: No fire. No explosion..... :	(See Table 7.3.2)	N/A
7.3.3	Free fall		N/A
	Results: No fire. No explosion.		N/A
7.3.4	Mechanical shock (crash hazard)		N/A
	Results: No fire. No explosion. No leakage.		N/A
7.3.5	Thermal abuse		N/A
	Oven temperature (°C)..... :		—
	Results: No fire. No explosion.		N/A
7.3.6	Crushing of cells		N/A
	The crushing force was released upon: - The maximum force of 13 kN ± 1 kN has been applied; or		N/A
	- An abrupt voltage drop of one-third of the original voltage has been obtained		N/A
	The cell is prismatic type and a second set of samples was tested, rotated 90° around longitudinal axis compared to the first set		N/A
	Results: No fire. No explosion..... :	(See Table 7.3.6)	N/A
7.3.7	Low pressure		N/A
	Chamber pressure (kPa)..... :		—

IEC 62133: 2012			
Clause	Requirement + Test	Result - Remark	Verdict
	Results: No fire. No explosion. No leakage.		N/A
7.3.8	Overcharge		N/A
	Results: No fire. No explosion..... :	(See Table 7.3.8)	N/A
7.3.9	Forced discharge		N/A
	Results: No fire. No explosion..... :	(See Table 7.3.9)	N/A

8	**Specific requirements and tests (lithium systems)**		**P**
8.1	Charging procedures for test purposes		P
8.1.1	First procedure: This charging procedure applied to tests other than those specified in 8.1.2	Complied.	P
8.1.2	Second procedure: This charging procedure applied to the tests of 8.3.1, 8.3.2, 8.3.4, 8.3.5, and 8.3.9		P
	If a cell's specified upper and/or lower charging temperature exceeds values for the upper and/or lower limit test temperatures of Table 4, the cells were charged at the specified values plus 5 °C for the upper limit and minus 5 °C for the lower limit	The upper limit test temperature was 45°C; The lower limit test temperature was -5°C.	P
	A valid rationale was provided to ensure the safety of the cell (see Figure A.1) ..... :		P
	For a different upper limit charging voltage (i.e. other than for lithium cobalt oxide systems at 4,25 V), the applied upper limit charging voltage and upper limit charging temperatures were adjusted accordingly	4.25V applied.	N/A
	A valid rationale was provided to ensure the safety of the cell (see Figure A.1) ..... :		N/A
8.2	Intended use		P
8.2.1	Continuous charging at constant voltage (cells)	Tested complied.	P
	Results: No fire. No explosion..... :	(See Table 8.2.1)	P
8.2.2	Moulded case stress at high ambient temperature (battery)	Cell only.	N/A
	Oven temperature (°C) ..... :		—
	Results: No physical distortion of the battery casing resulting in exposure if internal components		N/A
8.3	Reasonably foreseeable misuse		P
8.3.1	External short circuit (cell)		P
	The cells were tested until one of the following occurred: - 24 hours elapsed; or		N/A

IEC 62133: 2012			
Clause	Requirement + Test	Result - Remark	Verdict
	- The case temperature declined by 20% of the maximum temperature rise		P
	Results: No fire. No explosion..... :	(See Table 8.3.1)	P
8.3.2	External short circuit (battery)	Cell only.	N/A
	The cells were tested until one of the following occurred: - 24 hours elapsed; or		N/A
	- The case temperature declined by 20% of the maximum temperature rise		N/A
	In case of rapid decline in short circuit current, the battery pack remained on test for an additional one hour after the current reached a low end steady state condition		N/A
	Results: No fire. No explosion..... :		N/A
8.3.3	Free fall		P
	Results: No fire. No explosion.	No fire. No explosion.	P
8.3.4	Thermal abuse (cells)		P
	The cells were held at 130°C ± 2°C for: - 10 minutes; or	Tested complied.	P
	- 30 minutes for large cells (gross mass of more than 500 g as defined in IEC 62281)	<500g, small cell.	N/A
	Oven temperature (°C)..... :	130°C	—
	Gross mass of cell (g) ..... :	<500g, small cell.	—
	Results: No fire. No explosion.	No fire. No explosion.	P
8.3.5	Crush (cells)		P
	The crushing force was released upon: - The maximum force of 13 kN ± 1 kN has been applied; or	Tested complied.	P
	- An abrupt voltage drop of one-third of the original voltage has been obtained; or		N/A
	- 10% of deformation has occurred compared to the initial dimension		N/A
	Results: No fire. No explosion..... :	(See Table 8.3.5)	P
8.3.6	Over-charging of battery	Cell only.	N/A
	Test was continued until the temperature of the outer casing: - Reached steady state conditions (less than 10°C change in 30-minute period); or		N/A
	- Returned to ambient		N/A
	Results: No fire. No explosion..... :	(See Table 8.3.6)	N/A

IEC 62133: 2012			
Clause	Requirement + Test	Result - Remark	Verdict
8.3.7	Forced discharge (cells)		P
	Results: No fire. No explosion..... :	(See Table 8.3.7)	P
8.3.8	Transport tests		P
	Manufacturer's documentation provided to show compliance with UN Recommendations on Transport of Dangerous Goods	T-1, T-2, T-3 and T-4 tested complied. No leakage, no venting, no short-circuit, no rupture, no explosion and no fire. T-5, See Table 8.3.8. T-6 tested also complied, refer to Clause 8.3.5.	P
8.3.9	Design evaluation – Forced internal short circuit (cells)	Tested complied.	P
	The cells complied with national requirement for .....:	France, Japan, Republic of Korea and Switzerland.	—
	The pressing was stopped upon: - A voltage drop of 50 mV has been detected; or		N/A
	- The pressing force of 800 N (cylindrical cells) or 400 N (prismatic cells) has been reached	800N for cylindrical cells.	P
	Results: No fire ..... :	(See Table 8.3.9)	P
9	**Information for safety**		**P**
	The manufacturer of secondary cells ensures that information is provided about current, voltage and temperature limits of their products.	Information for safety mentioned in manufacturer's specifications.	P
	The manufacturer of batteries ensures that equipment manufacturers and, in the case of direct sales, end-users are provided with information to minimize and mitigate hazards.		N/A
	Systems analyses performed by device manufacturers to ensure that a particular battery design prevents hazards from occurring during use of a product		N/A
	As appropriate, information relating to hazard avoidance resulting from a system analysis is provided to the end user ..... :		N/A
10	**Marking**		**P**
10.1	Cell marking		P
	Cells marked as specified in the applicable cell standards: IEC 61951-1, IEC 61951-2 or IEC 61960.	The cell is marked in accordance with IEC 61960, also see page 4.	P
10.2	Battery marking		N/A

IEC 62133: 2012			
Clause	Requirement + Test	Result - Remark	Verdict
	Batteries marked in accordance with the requirements for the cells from which they are assembled.		N/A
	Batteries marked with an appropriate caution statement.		N/A
10.3	Other information		P
	Storage and disposal instructions marked on or supplied with the battery.	Information for disposal instructions mentioned in manufacturer's specifications.	P
	Recommended charging instructions marked on or supplied with the battery.	Information for recommended charging instructions mentioned in manufacturer's specifications.	P

11	**Packaging**		**P**
	The materials and packaging design are chosen so as to prevent the development of unintentional electrical conduction, corrosion of the terminals and ingress of environmental contaminants.		P

Annex A	**Charging range of secondary lithium ion cells for safe use**		**P**
A.1	General		P
A.2	Safety of lithium-ion secondary battery	Complied.	P
A.3	Consideration on charging voltage	Complied.	P
A.3.1	General	Charging voltage is 4.2V	P
A.3.2	Upper limit charging voltage	4.25V	P
A.3.2.1	General		P
A.3.2.2	Explanation of safety viewpoint		N/A
A.3.2.3	Safety requirements, when different upper limit charging voltage is applied	4.25V applied.	N/A
A.4	Consideration of temperature and charging current		P
A.4.1	General		P
A.4.2	Recommended temperature range	See A.4.2.2.	P
A.4.2.1	General		P
A.4.2.2	Safety consideration when a different recommended temperature range is applied	Charging temperature declared by client is: 0-40°C or 45°C	P
A.4.3	High temperature range	Not higher than the temperature range specific in this standard.	N/A

IEC 62133: 2012			
Clause	Requirement + Test	Result - Remark	Verdict
A.4.3.1	General		N/A
A.4.3.2	Explanation of safety viewpoint		N/A
A.4.3.3	Safety considerations when specifying charging conditions in high temperature range		N/A
A.4.3.4	Safety consideration when specifying new upper limit in high temperature range		N/A
A.4.4	Low temperature range	Charging lower temperature declared by client is 0°C.	P
A.4.4.1	General		P
A.4.4.2	Explanation of safety viewpoint		P
A.4.4.3	Safety considerations, when specifying charging conditions in low temperature range		P
A.4.4.4	Safety considerations when specifying a new lower limit in the low temperature range	-5°C applied.	P
A.4.5	Scope of the application of charging current		P
A.5	Sample preparation		P
A.5.1	General		P
A.5.2	Insertion procedure for nickel particle to generate internal short		P
	The insertion procedure carried out at 20°C±5°C and under -25 °C of dew point		P
A.5.3	Disassembly of charged cell		P
A.5.4	Shape of nickel particle		P
A.5.5	Insertion of nickel particle to cylindrical cell		N/A
A.5.5.1	Insertion of nickel particle to winding core		N/A
A.5.5.2	Mark the position of nickel particle on the both end of winding core of the separator		N/A
A.5.6	Insertion of nickel particle to prismatic cell		P

	TABLE: Critical components information				P
Object/part no.	**Manufacturer/ trademark**	**Type/model**	**Technical data**	**Standard**	**Mark(s) of conformity [1)]**
Cell Case	Interchangeable	Interchangeable	Steel Foil, L65.0*Ø18.50mm	--	--
Positive Electrode	Interchangeable	Interchangeable	Positive material LiNiCoMnO2, coated on Al film, TNL-ITR18650-P-1300: 9.03g, TNL-ITR18650-P-1500: 10.39g, TNL-ITR18650-1800F: 15.00g, TNL-ITR18650-2000P & TNL-ITR18650-2000F : 15.01g, TNL-ITR18650-2200P & TNL-ITR18650-2200F & TNL-ITR18650-2200E: 14.61g, TNL-ITR18650-2400P: 15.40g, TNL-ITR18650-2500F: 15.75g, TNL-ITR18650-2600P:16.15g, TNL-ITR18650-2800F:15.25g, TNL-ITR18650-2900F:15.81g, TNL-ITR18650-3000F:16.30g	--	--

Negative Electrode	Interchangeable	Interchangeable	Negative material C coated on Cu film TNL-ITR18650-P-1300: 5.19g, TNL-ITR18650-P-1500: 5.71g, TNL-ITR18650-1800F: 7.25g, TNL-ITR18650-2000P & TNL-ITR18650-2000F: 7.25g, TNL-ITR18650-2200P & TNL-ITR18650-2200F & TNL-ITR18650-2200E: 7.88g, TNL-ITR18650-2400P: 8.12g, TNL-ITR18650-2800F:9.24g, TNL-ITR18650-2900F:9.56g, TNL-ITR18650-3000F:9.67g	--	--
Separator	SHENZHEN XURAN ELECTRONICS CO.,LTD.	20μm	PE/PP, Shutdown temperature: 130°C	--	--

Electrolyte	Interchangeable	Interchangeable	$LiPF_6$ dissolved in organic solvent (EC+ DMC+EMC) TNL-ITR18650-P-1300: 5.5g, TNL-ITR18650-P-1500: 5.4g, TNL-ITR18650-1800F: 5.8g, TNL-ITR18650-2000P & TNL-ITR18650-2000F: 5.8g, TNL-ITR18650-2200P & TNL-ITR18650-2200F & TNL-ITR18650-2200E: 5.6g, TNL-ITR18650-2400P: 5.5g, TNL-ITR18650-2500F: 5.4g, TNL-ITR18650-2600P: 5.3g, TNL-ITR18650-2800F: 5.2g, TNL-ITR18650-2900F: 5.1g, TNL-ITR18650-3000F: 5.0g	--	--
Supplementary information: **[1] Provided evidence ensures the agreed level of compliance.**					

7.2.1	TABLE: Continuous low rate charge (cells)				N/A
Model	**Recommended charging method, (CC, CV, or CC/CV)**	**Recommended charging voltage V_c, (Vdc)**	**Recommended charging current I_{rec}, (A)**	**OCV at start of test, (Vdc)**	**Results**

Supplementary information:

- No fire or explosion
- No leakage
- Leakage
- Fire
- Explosion
- Bulge
- Others (please explain)

7.2.2	TABLE: Vibration	N/A
Model	**OCV at start of test, (Vdc)**	**Results**

Supplementary information: Not applied to this Li-ion battery.

- No fire or explosion
- No leakage
- Leakage
- Fire
- Explosion
- Bulge
- Others (please explain)

7.3.1	TABLE: Incorrect installation (cells)	N/A
Model	**OCV of reversed cell, (Vdc)**	**Results**

Supplementary information: Not applied to this Li-ion battery.

- No fire or explosion
- No leakage
- Leakage
- Fire
- Explosion
- Bulge
- Others (please explain)

7.3.2	TABLE: External short circuit				N/A
Model	**Ambient (at 20°C ± 5ºC or 55°C ± 5°C)**	**OCV at start of test, (Vdc)**	**Resistance of circuit, (Ω)**	**Maximum case temperature rise ΔT, (°C)**	**Results**

Supplementary information: Not applied to this Li-ion battery.

- No fire or explosion
- No leakage
- Leakage
- Fire
- Explosion
- Bulge
- Others (please explain)

7.3.6	TABLE: Crush		N/A
Model	**OCV at start of test, (Vdc)**	**OCV at removal of crushing force, (Vdc)**	**Results**

Supplementary information: Not applied to this Li-ion battery. - No fire or explosion - No leakage - Leakage - Fire - Explosion - Bulge - Others (please explain)

7.3.8	TABLE: Overcharge			N/A
Model	**OCV prior to charging, (Vdc)**	**Maximum charge current, (A)**	**Time for charging, (hours)**	**Results**
Supplementary information: Not applied to this Li-ion battery. - No fire or explosion - No leakage - Leakage - Fire - Explosion - Bulge - Others (please explain)				

7.3.9	TABLE: Forced discharge (cells)			N/A
Model	**OCV before application of reverse charge, (Vdc)**	**Measured reverse charge I_t, (A)**	**Time for reversed charge, (minutes)**	**Results**
Supplementary information: Not applied to this Li-ion battery. - No fire or explosion - No leakage - Leakage - Fire - Explosion - Bulge - Others (please explain)				

8.2.1	TABLE: Continuous charging at constant voltage (cells)			P
Model	**Recommended charging voltage V_c, (Vdc)**	**Recommended charging current I_{rec}, (mA)**	**OCV at start of test, (Vdc)**	**Results**
For TNL-ITR18650-3000F				
1	4.2	600	4.16	P
2	4.2	600	4.15	P
3	4.2	600	4.15	P
4	4.2	600	4.16	P
5	4.2	600	4.16	P
For TNL-ITR18650-2400P				
1	4.2	480	4.15	P
2	4.2	480	4.16	P
3	4.2	480	4.16	P
4	4.2	480	4.14	P
5	4.2	480	4.14	P
For TNL-ITR18650-2000P				
1	4.2	1000	4.16	P
2	4.2	1000	4.16	P
3	4.2	1000	4.16	P
4	4.2	1000	4.16	P
5	4.2	1000	4.16	P
For TNL-ITR18650-1800F				
1	4.2	360	4.19	P
2	4.2	360	4.18	P
3	4.2	360	4.18	P
4	4.2	360	4.18	P
5	4.2	360	4.18	P
For TNL-ITR18650-P-1300				
1	4.2	1300	4.18	P
2	4.2	1300	4.18	P
3	4.2	1300	4.18	P
4	4.2	1300	4.18	P
5	4.2	1300	4.19	P
Supplementary information: No fire or explosion, no leakage. - No fire - No explosion - No leakage				

8.3.1	TABLE: External short circuit (cells)				P
Model	**Ambient, (°C)**	**OCV at start of test, (Vdc)**	**Resistance of circuit, (Ω)**	**Maximum case temperature ~~rise ΔT~~, (°C)**	**Results**
For TNL-ITR18650-3000F					
Samples charged at charging temperature upper limit (45°C)					
1	19.2	4.20	0.08	53.5	P
2	19.2	4.20	0.08	53.8	P
3	19.2	4.20	0.08	53.2	P
4	19.2	4.20	0.08	57.6	P
5	19.2	4.20	0.08	54.5	P
Samples charged at charging temperature lower limit (-5°C)					
6	19.2	4.07	0.08	52.8	P
7	19.2	4.04	0.08	56.3	P
8	19.2	4.07	0.08	55.8	P
9	19.2	4.03	0.08	59.6	P
10	19.2	4.04	0.08	51.7	P
For TNL-ITR18650-2400P					
Samples charged at charging temperature upper limit (45°C)					
1	21.5	4.19	0.08	57.5	P
2	21.5	4.19	0.08	58.9	P
3	21.5	4.20	0.08	56.6	P
4	21.5	4.18	0.08	55.2	P
5	21.5	4.19	0.08	50.9	P
Samples charged at charging temperature lower limit (-5°C)					
6	22.2	4.08	0.08	61.8	P
7	22.2	4.08	0.08	64.3	P
8	22.2	4.06	0.08	60.4	P
9	22.2	4.07	0.08	65.6	P
10	22.2	4.06	0.08	63.8	P
For TNL-ITR18650-2000P					
Samples charged at charging temperature upper limit (45°C)					
1	18.2	4.19	0.08	59.1	P
2	18.2	4.20	0.08	59.7	P
3	18.2	4.20	0.08	63.4	P
4	18.2	4.19	0.08	59.1	P
5	18.2	4.20	0.08	59.8	P
Samples charged at charging temperature lower limit (-5°C)					

6	21.0	4.06	0.08	60.9	P
7	21.0	4.08	0.08	62.0	P
8	21.0	4.07	0.08	54.9	P
9	21.0	4.07	0.08	55.7	P
10	21.0	4.08	0.08	56.9	P
For TNL-ITR18650-1800F					
Samples charged at charging temperature upper limit (45°C)					
1	20.9	4.22	0.08	63.9	P
2	20.9	4.23	0.08	59.4	P
3	20.9	4.22	0.08	57.5	P
4	20.9	4.22	0.08	54.6	P
5	20.9	4.22	0.08	58.0	P
Samples charged at charging temperature lower limit (-5°C)					
6	20.2	4.14	0.08	49.7	P
7	20.2	4.14	0.08	64.9	P
8	20.2	4.14	0.08	54.0	P
9	20.2	4.14	0.08	52.8	P
10	20.2	4.14	0.08	62.2	P
For TNL-ITR18650-P-1300					
Samples charged at charging temperature upper limit (45°C)					
1	20.8	4.20	0.08	89.5	P
2	20.8	4.20	0.08	84.6	P
3	20.8	4.20	0.08	92.7	P
4	20.8	4.20	0.08	95.2	P
5	20.8	4.20	0.08	89.8	P
Samples charged at charging temperature lower limit (-5°C)					
6	19.9	4.13	0.08	84.3	P
7	19.9	4.17	0.08	85.2	P
8	19.9	4.15	0.08	79.7	P
9	19.9	4.15	0.08	84.9	P
10	19.9	4.15	0.08	82.0	P
Supplementary information: No fire, no explosion. - No fire - No explosion					

8.3.2	TABLE: External short circuit (battery)				N/A
Model	**Ambient, (°C)**	**OCV at start of test, (Vdc)**	**Resistance of circuit, (Ω)**	**Maximum case temperature ~~rise ΔT, (°C)~~**	**Results**
Samples charged at charging temperature upper limit (°C)					
Samples charged at charging temperature lower limit (°C)					

Supplementary information:

- No fire
- No explosion

8.3.5	TABLE: Crush				P
Model	**OCV at start of test, (Vdc)**	**OCV at removal of crushing force, (Vdc)**	**Width/ diameter of cell before crush, (mm)**	**Required deformation for crush, (mm)**	**Results**
For TNL-ITR18650-3000F					
Samples charged at charging temperature upper limit (45°C)					
1	4.18	4.17	--	--	P
2	4.19	4.19	--	--	P
3	4.19	4.19	--	--	P
4	4.19	4.18	--	--	P
5	4.19	4.18	--	--	P
For TNL-ITR18650-2400P					
Samples charged at charging temperature upper limit (45°C)					
1	4.20	4.20	--	--	P
2	4.21	4.20	--	--	P
3	4.21	4.21	--	--	P
4	4.20	4.20	--	--	P
5	4.20	4.20	--	--	P
For TNL-ITR18650-2000P					

Samples charged at charging temperature upper limit (45°C)					
1	4.20	4.20	--	--	P
2	4.20	4.20	--	--	P
3	4.20	4.20	--	--	P
4	4.20	4.20	--	--	P
5	4.20	4.20	--	--	P
For TNL-ITR18650-1800F					
Samples charged at charging temperature upper limit (45°C)					
1	4.20	4.20	--	--	P
2	4.20	4.18	--	--	P
3	4.18	4.18	--	--	P
4	4.19	4.19	--	--	P
5	4.19	4.18	--	--	P
For TNL-ITR18650-P-1300					
Samples charged at charging temperature upper limit (45°C)					
1	4.21	4.21	--	--	P
2	4.20	4.20	--	--	P
3	4.20	4.20	--	--	P
4	4.21	4.21	--	--	P
5	4.21	4.21	--	--	P
Note: **A 13kN force applied at the cells.** **No voltage abrupt drop occurred.** **Supplementary information: No fire, no explosion.** - No fire - No explosion					

8.3.6	**TABLE: Over-charging of battery**			**N/A**
Constant charging current (A).....:				—
Supply voltage (Vdc).....:				—
Model	**OCV before charging, (Vdc)**	**Resistance of circuit, (mΩ)**	**Maximum outer casing temperature, (°C)**	**Results**

Supplementary information:

- No fire
- No explosion

8.3.7	TABLE: Forced discharge (cells)			P
Model	**OCV before application of reverse charge, (Vdc)**	**Measured Reverse charge I_t, (A)**	**Time for reversed charge, (minutes)**	**Results**
For TNL-ITR18650-3000F				
1	3.21	3.0	90	P
2	3.21	3.0	90	P
3	3.19	3.0	90	P
4	3.20	3.0	90	P
5	3.18	3.0	90	P
For TNL-ITR18650-2400P				
1	3.38	2.4	90	P
2	3.41	2.4	90	P
3	3.37	2.4	90	P
4	3.38	2.4	90	P
5	3.38	2.4	90	P
For TNL-ITR18650-2000P				
1	3.12	2.0	90	P
2	3.13	2.0	90	P
3	3.14	2.0	90	P
4	3.12	2.0	90	P
5	3.12	2.0	90	P
For TNL-ITR18650-1800F				
1	3.37	1.8	90	P
2	3.45	1.8	90	P
3	3.45	1.8	90	P
4	3.45	1.8	90	P
5	3.38	1.8	90	P
For TNL-ITR18650-P-1300				
1	3.27	1.3	90	P
2	3.27	1.3	90	P
3	3.16	1.3	90	P
4	3.24	1.3	90	P
5	3.26	1.3	90	P

Supplementary information: no fire, no explosion.

- No fire
- No explosion

8.3.8 T-5	TABLE: External short circuit (cells)				P
Model	**Ambient, (°C)**	**OCV at start of test, (Vdc)**	**Resistance of circuit, (Ω)**	**Maximum case temperature ~~rise~~ ΔT, (°C)**	**Results**
For TNL-ITR18650-3000F					
1	55.2	4.09	0.08	73.1	P
2	55.2	4.09	0.08	77.8	P
3	55.2	4.10	0.08	72.2	P
4	55.2	4.10	0.08	76.4	P
5	55.2	4.10	0.08	74.3	P
6	55.7	4.10	0.08	74.7	P
7	55.7	4.10	0.08	78.3	P
8	55.7	4.09	0.08	77.8	P
9	55.7	4.09	0.08	76.1	P
10	55.7	4.09	0.08	72.1	P
For TNL-ITR18650-2400P					
1	55.6	4.08	0.08	73.5	P
2	55.6	4.09	0.08	74.7	P
3	55.6	4.10	0.08	73.6	P
4	55.6	4.09	0.08	79.2	P
5	55.6	4.10	0.08	76.6	P
6	55.4	4.09	0.08	74.1	P
7	55.4	4.09	0.08	74.3	P
8	55.4	4.09	0.08	75.0	P
9	55.4	4.08	0.08	75.2	P
10	55.4	4.09	0.08	75.5	P
For TNL-ITR18650-2000P					
1	55.7	4.09	0.08	75.8	P
2	55.7	4.03	0.08	78.1	P
3	55.7	4.09	0.08	77.2	P
4	55.7	4.09	0.08	78.2	P
5	55.7	4.08	0.08	74.1	P
6	55.8	4.02	0.08	74.0	P
7	55.8	4.09	0.08	76.3	P
8	55.8	4.09	0.08	77.4	P

9	55.8	4.02	0.08	80.2	P
10	55.8	4.09	0.08	76.6	P
For TNL-ITR18650-1800F					
1	54.5	4.11	0.08	73.5	P
2	54.5	4.11	0.08	78.2	P
3	54.5	4.12	0.08	77.6	P
4	54.5	4.11	0.08	77.7	P
5	54.5	4.10	0.08	72.0	P
6	55.7	4.10	0.08	68.4	P
7	55.7	4.11	0.08	69.1	P
8	55.7	4.11	0.08	72.6	P
9	55.7	4.11	0.08	71.2	P
10	55.7	4.11	0.08	62.9	P
For TNL-ITR18650-P-1300					
1	55.9	4.17	0.08	109.8	P
2	55.9	4.16	0.08	100.7	P
3	55.9	4.17	0.08	105.7	P
4	55.9	4.17	0.08	108.4	P
5	55.9	4.17	0.08	90.4	P
6	56.2	4.17	0.08	99.0	P
7	56.2	4.17	0.08	87.7	P
8	56.2	4.17	0.08	105.2	P
9	56.2	4.17	0.08	103.7	P
10	56.2	4.17	0.08	108.4	P

Supplementary information:

The external short-circuit test of 10 pcs samples performed after the test of Altitude, Thermal cycling, Vibration and Shock in sequence.

-No excessive temperature rise, no rupture, no explosion and no fire

8.3.9	TABLE: Forced internal short circuit (cells)					P
Model	**Chamber ambient, (°C)**	**OCV at start of test, (Vdc)**	**Particle location [1)]**	**Maximum applied pressure, (N)**	**Voltage drop, (mV)**	**Results**
For TNL-ITR18650-3000F						
1	45	4.17	1	800	0	P
2	45	4.17	1	800	0	P
3	45	4.17	1	800	5	P
4	45	4.17	2	800	0	P

5	45	4.17	2	800	0	P
6	10	4.06	1	800	0	P
7	10	4.05	1	800	0	P
8	10	4.04	1	800	1	P
9	10	4.04	2	800	0	P
10	10	4.06	2	800	0	P
For TNL-ITR18650-2400P						
1	45	4.20	1	800	0	P
2	45	4.20	1	800	0	P
3	45	4.20	1	800	0	P
4	45	4.21	2	800	0	P
5	45	4.20	2	800	0	P
6	10	4.09	1	800	0	P
7	10	4.08	1	800	0	P
8	10	4.06	1	800	0	P
9	10	4.08	2	800	0	P
10	10	4.08	2	800	0	P
For TNL-ITR18650-2000P						
1	45	4.19	1	800	0	P
2	45	4.19	1	800	0	P
3	45	4.18	1	800	0	P
4	45	4.19	2	800	0	P
5	45	4.20	2	800	0	P
6	10	4.05	1	800	0	P
7	10	4.05	1	800	0	P
8	10	4.05	1	800	0	P
9	10	4.05	2	800	0	P
10	10	4.05	2	800	0	P
For TNL-ITR18650-1800P						
1	45	4.20	1	800	0	P
2	45	4.19	1	800	0	P
3	45	4.19	1	800	1	P
4	45	4.20	1	800	3	P
5	45	4.20	1	800	0	P
6	10	4.14	1	800	0	P
7	10	4.14	1	800	2	P
8	10	4.14	1	800	1	P
9	10	4.14	1	800	0	P

10	10	4.14	1	800	5	P
For TNL-ITR18650-P-1300						
1	45	4.20	1	800	0	P
2	45	4.19	1	800	3	P
3	45	4.20	1	800	2	P
4	45	4.20	2	800	0	P
5	45	4.20	2	800	5	P
6	10	4.13	1	800	0	P
7	10	4.13	1	800	0	P
8	10	4.15	1	800	1	P
9	10	4.14	2	800	1	P
10	10	4.16	2	800	0	P

Supplementary information:

[1)] Identify one of the following:

1: Nickel particle inserted between positive and negative (active material) coated area.

2: Nickel particle inserted between positive aluminium foil and negative active material coated area.

- No fire

-- End of Report --

Product: Rechargeable Li-ion Cell

Type Designation: See test report



Figure 1: TNL-ITR18650-3000F

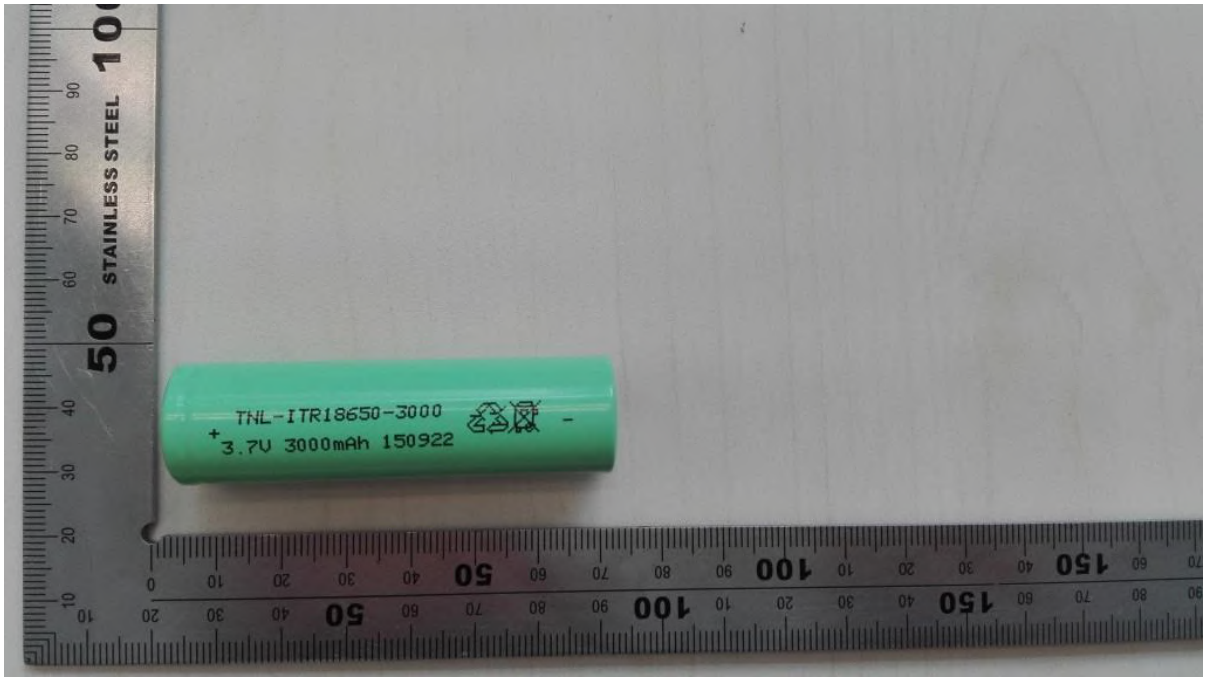

Figure 2: TNL-ITR18650-3000F

Product: Rechargeable Li-ion Cell

Type Designation: See test report



Figure 3: TNL-ITR18650-2400P



Figure 4: TNL-ITR18650-2400P

Product: Rechargeable Li-ion Cell

Type Designation: See test report



Figure 5: TNL-ITR18650-2000P & TNL-ITR18650-2000F

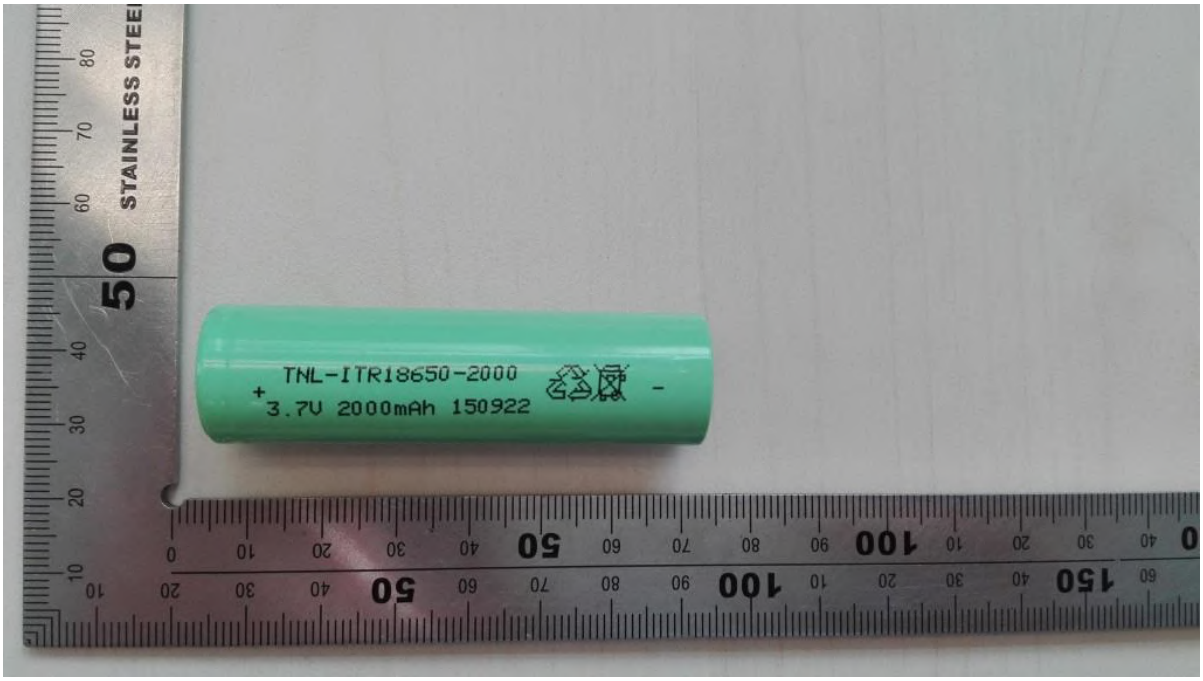

Figure 6: TNL-ITR18650-2000P & TNL-ITR18650-2000F

Product: Rechargeable Li-ion Cell

Type Designation: See test report

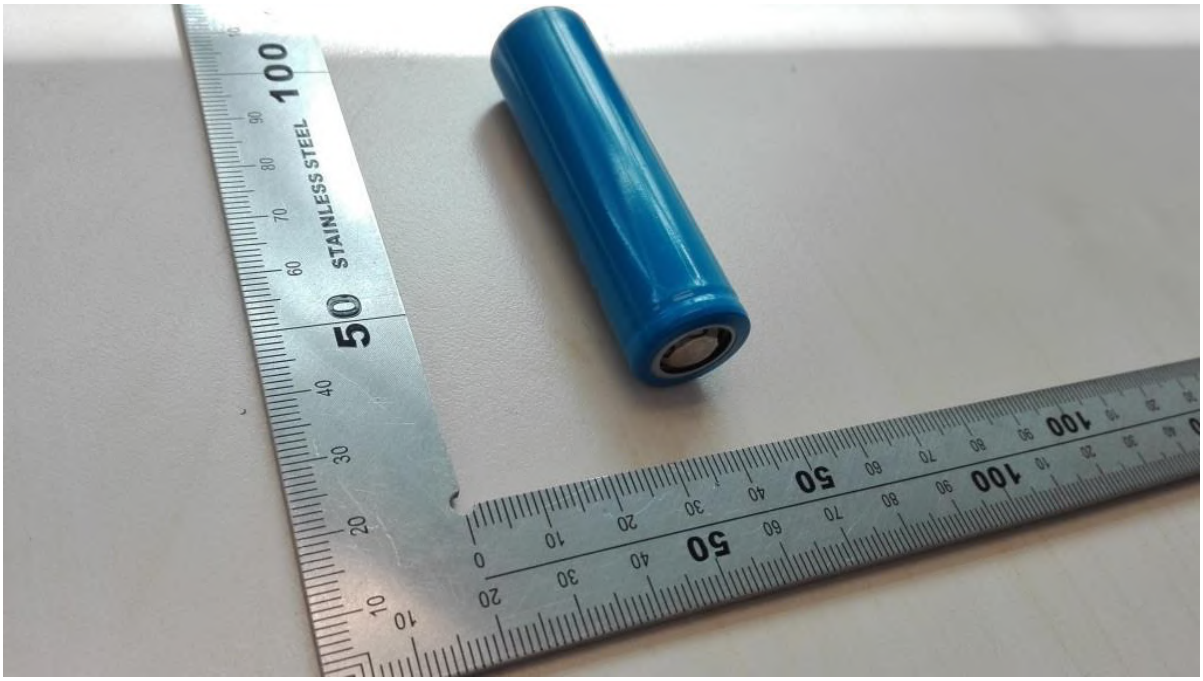

Figure 7: TNL-ITR18650-1800F



Figure 8: TNL-ITR18650-1800F

Product: Rechargeable Li-ion Cell

Type Designation: See test report

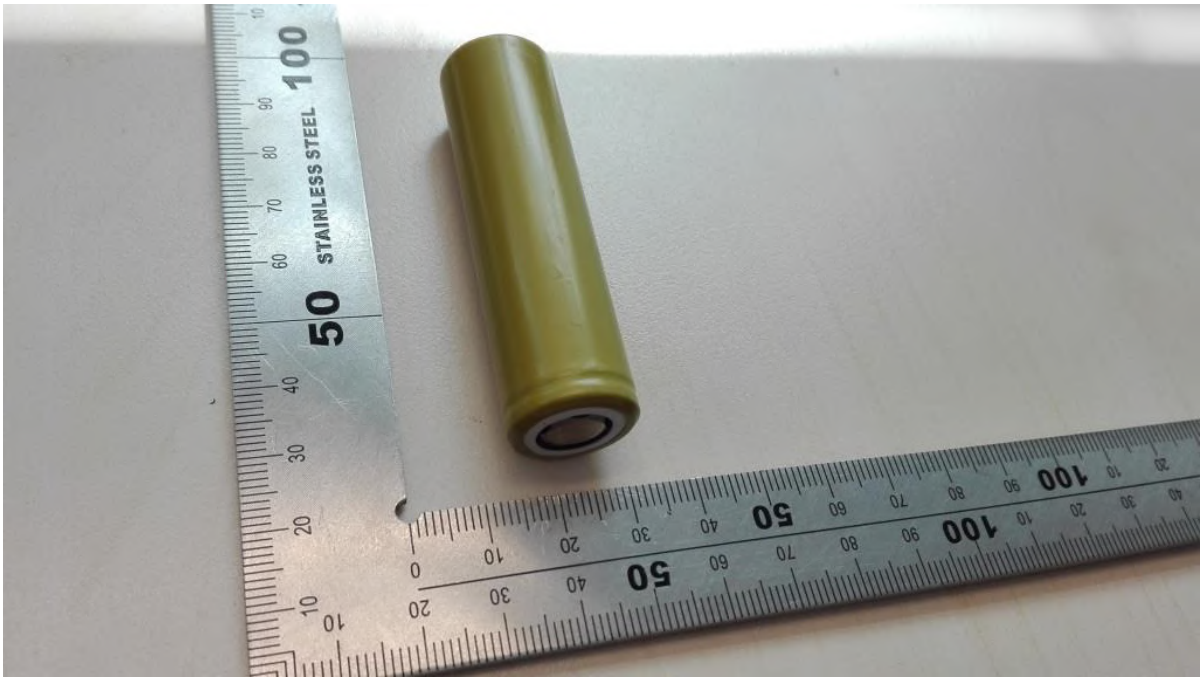

Figure 9: TNL-ITR18650-P-1300



Figure 10: TNL-ITR18650-P-1300

Remark: The pictures of cells only shown the models TNL-ITR18650-3000F, TNL-ITR18650-2400P, TNL-ITR18650-2000P, TNL-ITR18650-1800F and TNL-ITR18650-P-1300, other models are identical except appearance color, model name and rated capacity.