56G QSFP+ FDR Active Optical Cables

TSQS-8556G-xxxC

Features

- Four-channel full-duplex active optical cable with QSFP+ plugs
- Electrical interface compliant to SFF-8436
- Support 56GE data rate
- Hot Pluggable
- Built-in digital diagnostic functions
- 3.3V power supply voltage
- Operating case temperature 0°C to 70°C
- RoHS compliant



Applications

- Data Centers
- Infiniband transmission
- High performance computing (HPC) application

Module Block Diagram

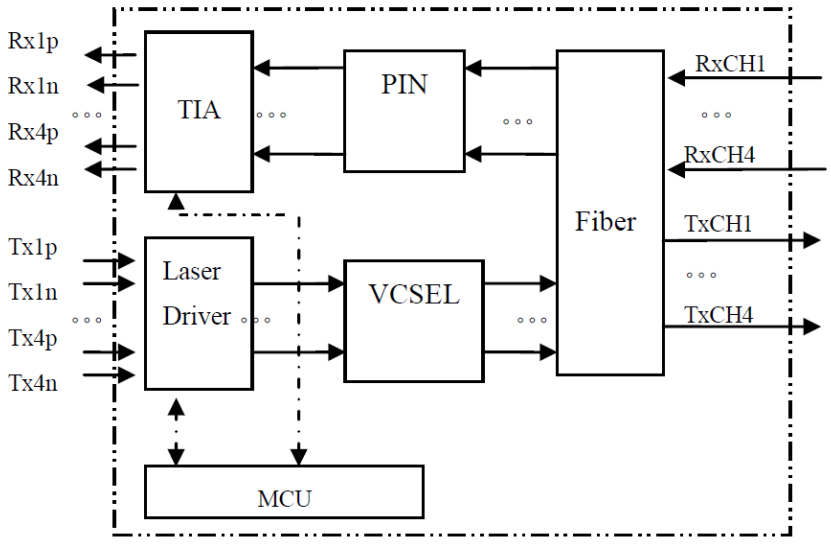

8 Jinxiu Middle Road, Pingshan, Shenzhen, Guangdong, 518118, P. R. China
+86 755 32983688 |info@china-tscom.com | www.china-tscom.com

Absolute Maximum Ratings

Parameter	Symbol	Min	Max	Unit
Storage Temperature	T_S	-20	85	℃
Relative Humidity	RH	0	85	%
Case Operating Temperature	T_{Case}	0	70	℃
Supply Voltage	V_{CC}	-0.5	3.6	V

Recommended Operating Conditions

Parameter	Symbol	Min	Typical	Max	Unit
Case Operating Temperature	T_{Case}	0	-	70	℃
Supply Voltage	V_{CC}	3.15	3.3	3.45	V
Differential Data Input Voltage Per Lane	V_{din}	200	-	1200	mVp-p
Data Rate Per Lane	DR	1.25	14.025	-	Gbit/s

Electrical Characteristics

Parameter	Symbol	Min	Typical	Max	Unit
Bit Error Ratio	BER	-	-	10^{-12}	-
Differential Data Output Voltage Per Lane	V_{dout}	320	450	-	mVp-p
Differential Termination Resistance	Z_{out}	80	100	120	Ohm
Module Total Power	P	-	-	1.5	W
Transmit Turn-On Time	-	2000	-	-	ms

Note:

1.Test with PRBS31 pattern

8 Jinxiu Middle Road, Pingshan, Shenzhen, Guangdong, 518118, P. R. China
+86 755 32983688 |info@china-tscom.com | www.china-tscom.com

Pin Descriptions

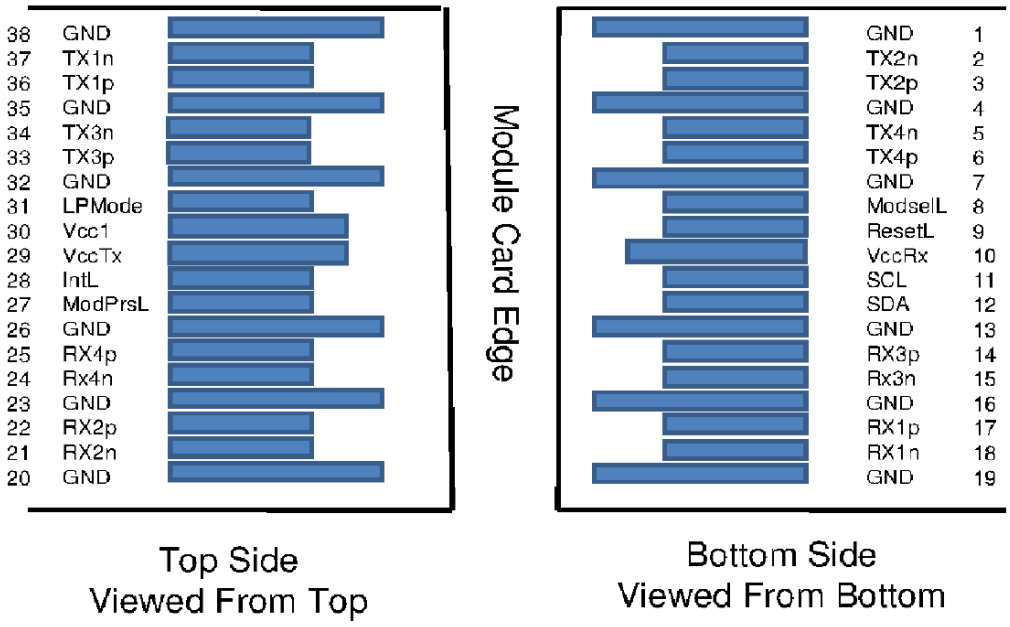

Pin Definitions

Pin	Symbol	Name/Description
1	GND	Ground
2	Tx2n	Transmitter Inverted Data Input
3	Tx2p	Transmitter Non-Inverted Data Input
4	GND	Ground
5	Tx4n	Transmitter Inverted Data Input
6	Tx4p	Transmitter Non-Inverted Data Input
7	GND	Ground
8	ModSelL	Module Select
9	ResetL	Module Reset
10	Vcc Rx	+3.3 V Power supply receiver
11	SCL	2-wire serial interface clock
12	SDA	2-wire serial interface data
13	GND	Ground
14	Rx3p	Receiver Non-Inverted Data Output
15	Rx3n	Receiver Inverted Data Output
16	GND	Ground
17	Rx1p	Receiver Non-Inverted Data Output

18	Rx1n	Receiver Inverted Data Output
19	GND	Ground
20	GND	Ground
21	Rx2n	Receiver Inverted Data Output
22	Rx2p	Receiver Non-Inverted Data Output
23	GND	Ground
24	Rx4n	Receiver Inverted Data Output
25	Rx4p	Receiver Non-Inverted Data Output
26	GND	Ground
27	ModPrsL	Module Present
28	IntL	Interrupt
29	Vcc Tx	+3.3 V Power supply transmitter
30	Vcc1	+3.3 V Power Supply
31	LPMode	Low Power Mode
32	GND	Ground
33	Tx3p	Transmitter Non-Inverted Data Input
34	Tx3n	Transmitter Inverted Data Input
35	GND	Ground
36	Tx1p	Transmitter Non-Inverted Data Input
37	Tx1n	Transmitter Inverted Data Input
38	GND	Ground

Mechanical Specifications

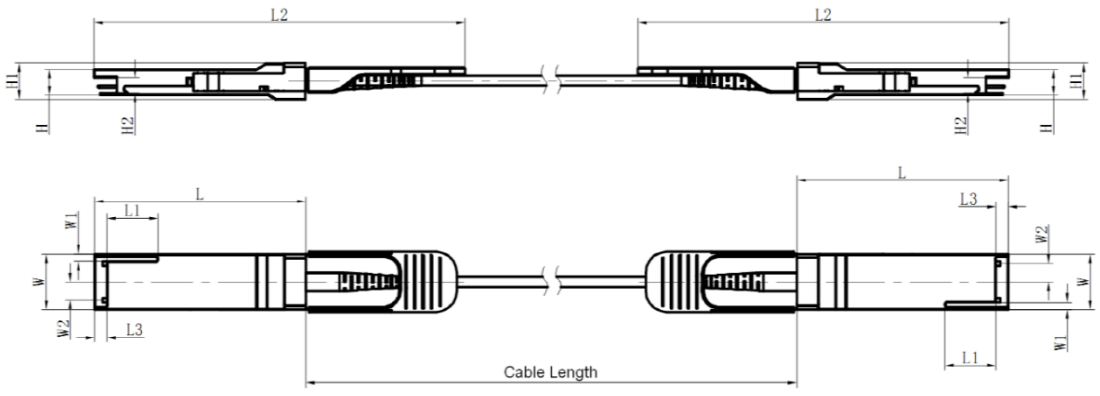

Unit: mm

	L	L1	L2	L3	W	W1	W2	H	H1	H2
MAX	72.2	–	122	4.35	18.45	–	6.2	8.6	12.0	5.35
Typical	72.0	–	–	4.20	18.35	–	–	8.5	11.8	5.2
MIN	68.8	16.5	118	4.05	18.25	2.2	5.8	8.4	11.6	5.05

Ordering information

Part Number	Product Description
TSQS-8556G-xxxC	QSFP+ 56G AOC 0°C ~ +70°C
xxx = denotes the AOC length with unit meter. For example, 001 denote 1m, 002 denote 2m … 099 denote 99m.	

Important Notice

Performance figures, data and any illustrative material provided in this data sheet are typical and must be specifically confirmed in writing by T&S before they become applicable to any particular order or contract. In accordance with the T&S policy of continuous improvement specifications may change without notice. The publication of information in this data sheet does not imply freedom from patent or other protective rights of T&S or others. Further details are available from any T&S sales representative.

8 Jinxiu Middle Road, Pingshan, Shenzhen, Guangdong, 518118, P. R. China
+86 755 32983688 |info@china-tscom.com | www.china-tscom.com