Ferrite flat pot magnet with internal threaded bush



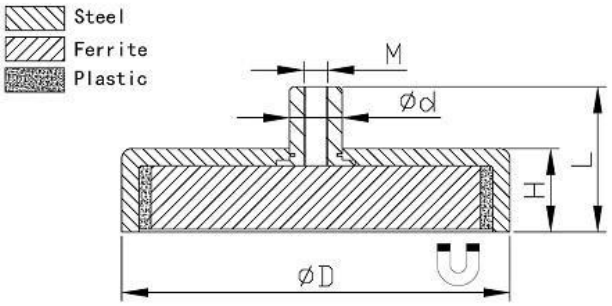

Item No.	D	H	L	d	M	Force			Weight
	mm	mm	mm	mm		Kg	N	Lbs	g
TFE10F	10	4.5	11.5	6	M3	0.4	4	0.9	3
TFE13F	13	4.5	11.5	6	M3	1	10	2	4
TFE16F	16	4.5	11.5	6	M3	1.8	18	4	7
TFE20F	20	6	13	6	M3	3	30	6.7	14
TFE25F	25	7	15	8	M4	4	40	9	21
TFE32F	32	7	15	8	M4	8	80	18	33
TFE36F	36	7.7	16	8	M4	10	100	22	44
TFE40F	40	8	18	10	M5	12	125	28	59
TFE47F	47	9	17	8	M4	18	180	40	85
TFE50F	50	10	22	12	M6	22	220	49	111
TFE57F	57	10.5	22.5	12	M6	28	280	63	153
TFE63F	63	14	30	15	M8	35	350	78	247
TFE80F	80	18	34	20	M10	61	600	135	498
TFE100F	100	22	43	22	M12	92	900	202	956





Address:Room 808, Building 4, Zhongxin Guangchang, 99 Shangwu Dadao, Huaqiao, Kunshan, Jiangsu Province, 215332, China
Tel:+86 512 5035 7618 Email:sales@ weizhongmagnetics.com