NdFeB black rubber coated magnet with threaded stud



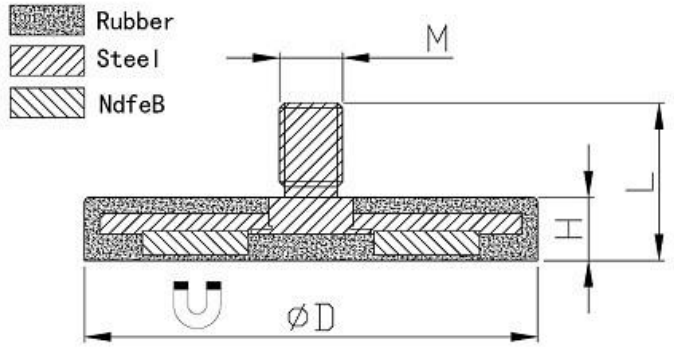

Item No.	D	H	L	M	Force			Weight
	mm	mm	mm		Kg	N	Lbs	g
RCND22M	22	6	12.5	M4	5.9	58	13	10
RCND31M	31	6	18	M5	9	89	20	21
RCND43M	43	6	21	M6	10	100	22	36
RCND66M	66	8	32	M6	25	250	56	107
RCND88M	88	8.5	32	M6	56	550	123	210





Address: Room 808, Building 4, Zhongxin Guangchang, 99 Shangwu Dadao, Huaqiao, Kunshan, Jiangsu Province, 215332, China
Tel: +86 512 5035 7618 Email: sales@weizhongmagnetics.com