# Oval shape NdFeB pot magnet



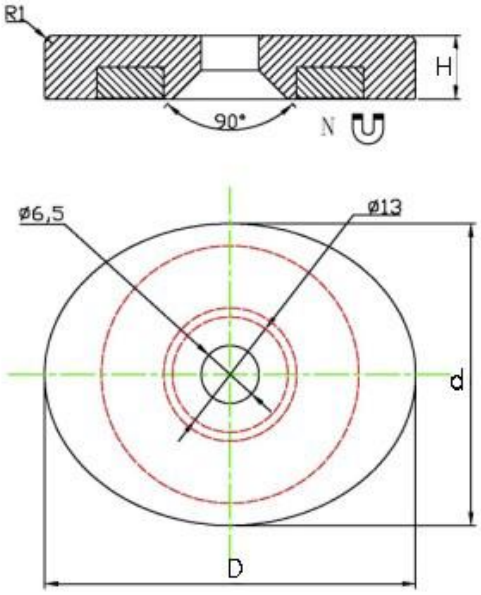


| Item No. | D | d | H | Force | | |
|---|---|---|---|---|---|---|
| | mm | mm | mm | Kg | N | Lbs |
| 8NGXXC4102 | 42 | 34 | 7.2 | 34 | 333 | 74 |



Address: Room 808, Building 4, Zhongxin Guangchang, 99 Shangwu Dadao, Huaqiao, Kunshan, Jiangsu Province, 215332, China
Tel: +86 512 5035 7618 Email: sales@weizhongmagnetics.com