Pot magnet with screw hole

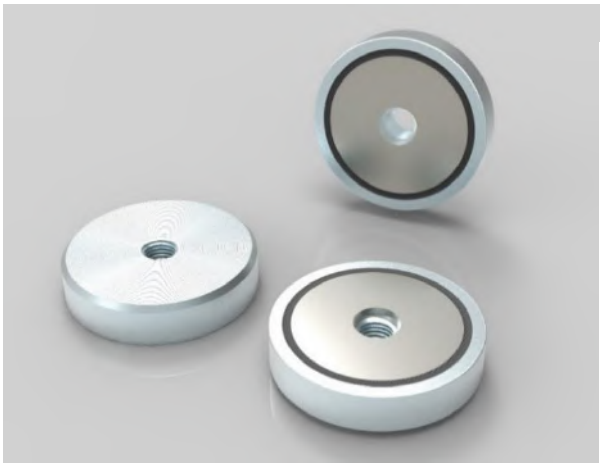

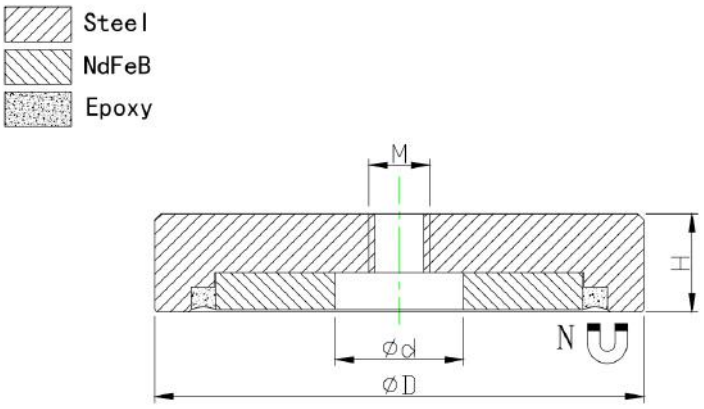

Item No.	D	d	H	M	Force			Weight
	mm	mm	mm		Kg	N	Lbs	g
M-RBNB25F	25	4.5	7	M4	16	160	36	24
M-RBNB32F	32	5.5	7	M5	33	330	74	40
M-RBNB40F	40	10.5	8	M5	51	500	112	74
M-RBNB50F	50	10.5	10	M8	81	800	180	140
M-RBNB60F	60	8.5	15	15	95	931	209	250
M-RBNB63F	63	11.7	14	M10	112	1100	247	315
M-RBNB75F	74.6	11.7	15	M10	178	1750	393	479

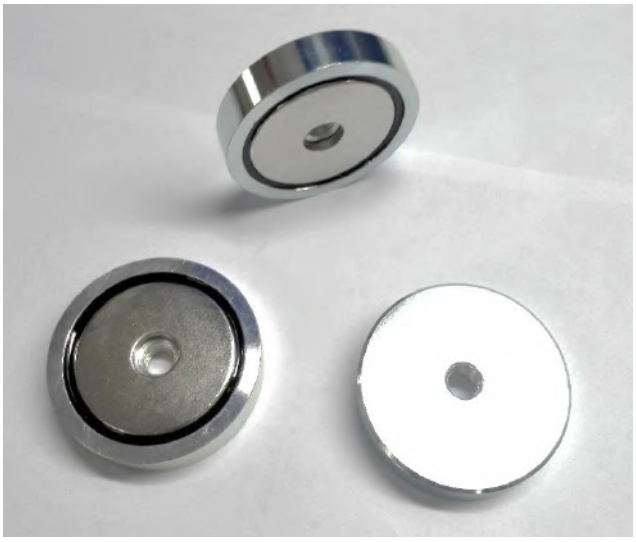

Address:Room 808, Building 4, Zhongxin Guangchang, 99 Shangwu Dadao, Huaqiao, Kunshan, Jiangsu Province, 215332, China
Tel:+86 512 5035 7618 Email:sales@ weizhongmagnetics.com