About us

- Weizhong Magnetics Co., Ltd is a China-based magnet assembly manufacturing company and a foremost custom magnet assembly manufacturer, supplying the most comprehensive range of best custom magnet assemblies locally and internationally.

- When all efforts are concentrated on one point it is a matter of time to make a difference. We hold this belief in our work and have been dedicated to manufacturing magnet assembly ever since 2010.

- As a professional magnet assembly manufacturer, we have accumulated rich experience and built up our expertise in manufacturing, engineering of rubber coated magnets, pot magnets, hook magnets, channel magnets —magnet assemblies that made out of a combination of magnet & metal, magnet & plastic or magnet & rubber.

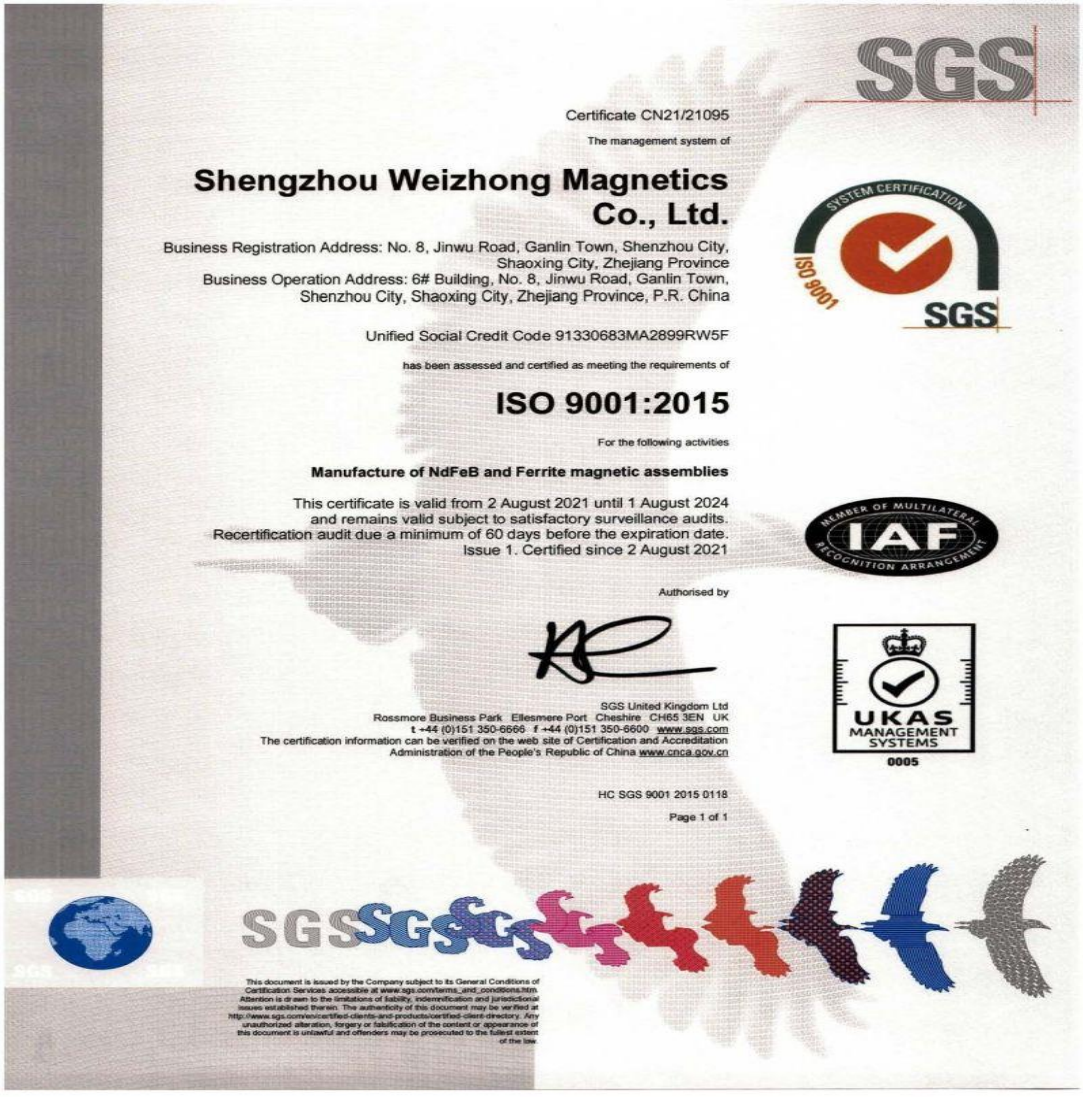

SGS

Certificate CN21/21095

The management system of

Shengzhou Weizhong Magnetics Co., Ltd.

Business Registration Address: No. 8, Jinwu Road, Ganlin Town, Shenzhou City, Shaoxing City, Zhejiang Province
Business Operation Address: 6# Building, No. 8, Jinwu Road, Ganlin Town, Shenzhou City, Shaoxing City, Zhejiang Province, P.R. China

Unified Social Credit Code 91330683MA2899RW5F

has been assessed and certified as meeting the requirements of

ISO 9001:2015

For the following activities

Manufacture of NdFeB and Ferrite magnetic assemblies

This certificate is valid from 2 August 2021 until 1 August 2024
and remains valid subject to satisfactory surveillance audits.
Recertification audit due a minimum of 60 days before the expiration date.
Issue 1. Certified since 2 August 2021

Authorised by

SGS United Kingdom Ltd
Rossmore Business Park Ellesmere Port Cheshire CH65 3EN UK
t +44 (0)151 350-6666 f +44 (0)151 350-6600 www.sgs.com
The certification information can be verified on the web site of Certification and Accreditation Administration of the People's Republic of China www.cnca.gov.cn

HC SGS 9001 2015 0118

Page 1 of 1

This document is issued by the Company subject to its General Conditions of Certification Services accessible at www.sgs.com/terms_and_conditions.htm. Attention is drawn to the limitations of liability, indemnification and jurisdictional issues established therein. The authenticity of this document may be verified at http://www.sgs.com/en/certified-clients-and-products/certified-client-directory. Any unauthorized alteration, forgery or falsification of the content or appearance of this document is unlawful and offenders may be prosecuted to the fullest extent of the law.

Address: RM 808 BLD#4, 99 Shangwu Dadao, Huaqiao Kunshan Jiangsu 215332 China
Tel: +86 512 5035 7618 Email: sales6@weizhongmagnetics.com

Product Categories

- 01 Rubber Coated Magnet 03



- 02 Pot Magnet 20



- 03 Magnetic Hooks 37



- 04 Deep Pot Magnet 55

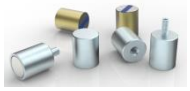

- 05 Channel Magnet 61

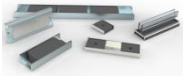

- 06 Shuttering Magnet 72



- 07 Magnetic Poster Hanger 92



- 08 Office Magnet 110



- 09 Accessories 118



- 10 Magnetic latches 123

Address: RM 808 BLD#4, 99 Shangwu Dadao, Huaqiao Kunshan Jiangsu 215332 China
Tel: +86 512 5035 7618 Email: sales6@weizhongmagnetics.com

01 Rubber coated magnet

Rubber coated magnets are widely used for wind power and many other industries.

By using magnetic products, you will have easy access to great flexibility and high efficiency. No welding, no drilling, easy operation. You can easily mount it or remove it quickly without damaging the construction.



The advantages of our rubber coated magnets

1) Our rubber coated magnetic parts are specially designed according to practical requirement in the specified industry.
2) The rubber material we use features good chemical stability in harsh environment. The rubber also protects holding surface from scratch.
3) We are happy to develop products according to your specific application requirements.

Address: RM 808 BLD#4, 99 Shangwu Dadao, Huaqiao Kunshan Jiangsu 215332 China
Tel: +86 512 5035 7618 Email: sales6@weizhongmagnetics.com

NdFeB rubber coated magnet with female thread



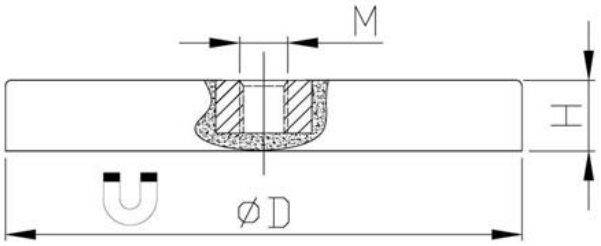

Item No.	D	H	M	Force			Weight
	mm	mm		Kg	N	Lbs	g
RCND22F	22	6	M4	5.9	58	13	10
RCND31F	31	6	M5	9	89	20	21
RCND43F	43	6	M6	10	100	22	36
RCND66F	66	8.5	M6	25	250	56	107
RCND88F	88	8.5	M6	56	550	123	210
SSRCND22F	22	6	M4	5.9	58	13	10
SSRCND31F	31	6	M5	9	89	20	21
SSRCND43F	43	6	M6	10	100	22	36
SSRCND66F	66	8	M6	25	250	56	108
SSRCND88F	88	8.5	M6	56	550	123	212

*** Item Nos start with SS are with stainless steel material ***





***** We test the holding force of magnetic assembly by attaching it on a 20mm thick steel sheet at room temperature and then pulling it slowly in vertical direction with the device that is sensitive enough to record the strength at the moment when magnetic assembly is separated from the steel sheet. This is to give you a reference where the actual holding force in real application could be different with the change of, for example, pulling direction, thickness of the surface etc.

Address: RM 808 BLD#4, 99 Shangwu Dadao, Huaqiao Kunshan Jiangsu 215332 China
Tel: +86 512 5035 7618 Email: sales6@weizhongmagnetics.com

NdFeB rubber coated magnet with screw bush



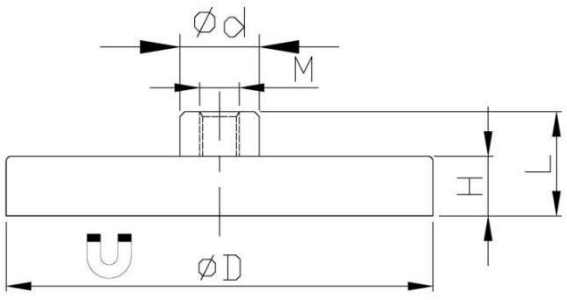

Item No.	D	d	H	L	M	Force		
	mm	mm	mm	mm		Kg	N	Lbs
RCND22F-11.5	22	8	6	11.5	M4	5.9	58	13
RCND31F-11.5	31	8	6	11.5	M4	9	89	20
RCND43F-10.5	43	8	6	10.5	M4	10	100	22
RCND66F-15	66	10	8.5	15	M5	25	250	56
RCND88F-17	88	12	8.5	17	M8	56	550	123

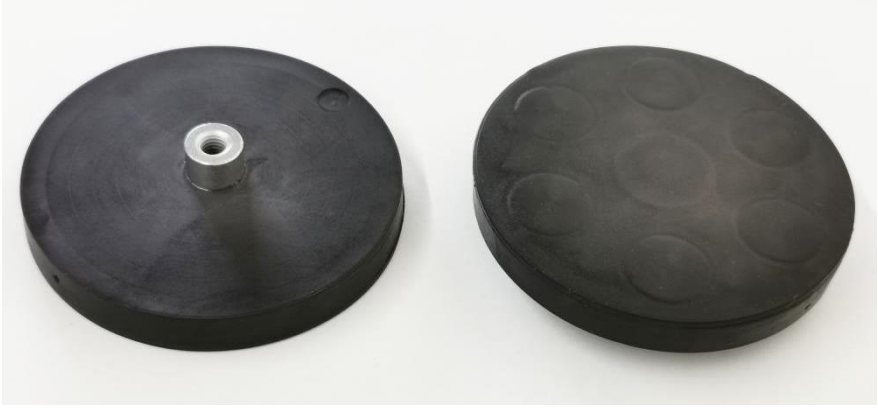

***** We test the holding force of magnetic assembly by attaching it on a 20mm thick steel sheet at room temperature and then pulling it slowly in vertical direction with the device that is sensitive enough to record the strength at the moment when magnetic assembly is separated from the steel sheet. This is to give you a reference where the actual holding force in real application could be different with the change of, for example, pulling direction, thickness of the surface etc.

Address: RM 808 BLD#4, 99 Shangwu Dadao, Huaqiao Kunshan Jiangsu 215332 China
Tel: +86 512 5035 7618 Email: sales6@weizhongmagnetics.com

NdFeB rubber coated magnet with threaded stud



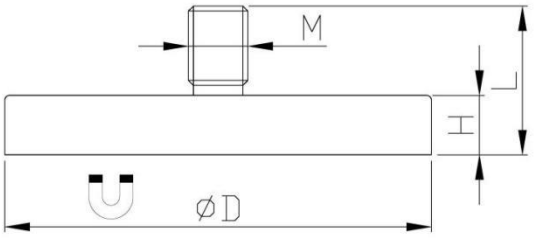

Item No.	D	H	L	M				Weight
	mm	mm	mm		Kg	N	Lbs	
RCND12M	12	7	15.5	M4	1.3	13	2.9	4.5
RCND22M	22	6	12.5	M4	5.9	58	13	10
RCND31M	31	6	18	M5	9	89	20	21
RCND43M	43	6	21	M6	10	100	22	36
RCND50M	50	10.5	30.5	M6	46	450	101	42.5
RCND64M	64	11.5	31.5	M8	91	900	202	208.2
RCND66M	66	8.5	23.5	M6	25	250	56	107
RCND88M	88	8.5	23.5	M8	56	550	123	210
SSRCND22M	22	6	12.5	M4	5.9	58	13	10
SSRCND31M	31	6	18	M5	9	89	20	21
SSRCND43M	43	6	21	M6	10	100	22	36
SSRCND66M	66	8	32	M6	25	250	56	108
SSRCND88M	88	8.5	32	M6	56	550	123	211

*** ***Item Nos start with SS are made of stainless-steel material ***

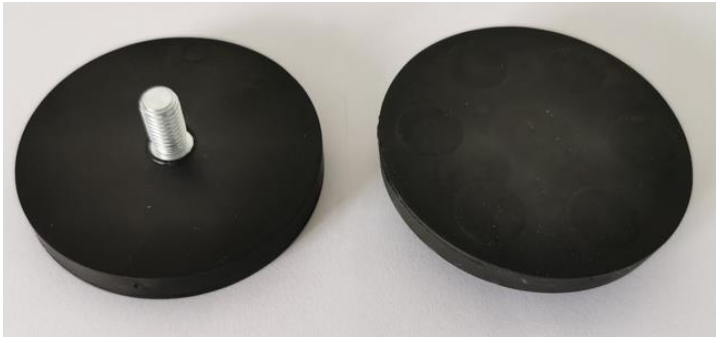



***** We test the holding force of magnetic assembly by attaching it on a 20mm thick steel sheet at room temperature and then pulling it slowly in vertical direction with the device that is sensitive enough to record the strength at the moment when magnetic assembly is separated from the steel sheet. This is to give you a reference where the actual holding force in real application could be different with the change of, for example, pulling direction, thickness of the surface etc.

Address: RM 808 BLD#4, 99 Shangwu Dadao, Huaqiao Kunshan Jiangsu 215332 China
Tel: +86 512 5035 7618 Email: sales6@weizhongmagnetics.com

NdFeB rubber coated magnet with cylinder bore

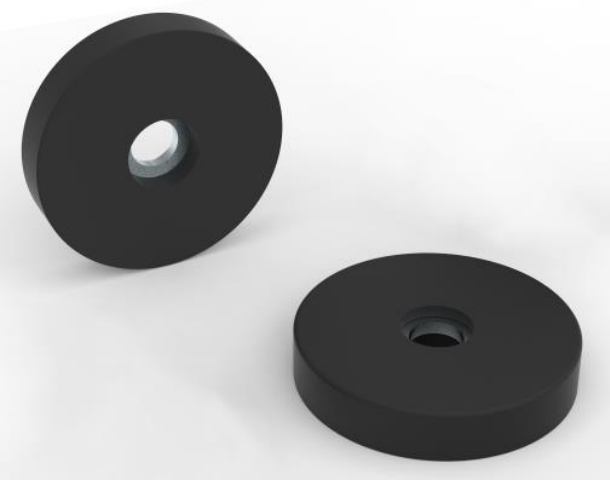

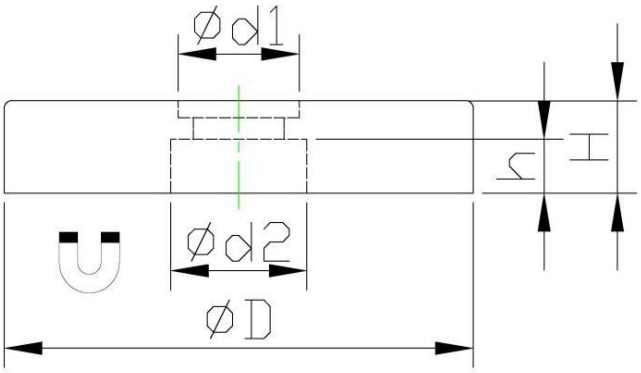

Item No.	D	H	h	d1	d2	Force			Weight
	mm	mm	mm	mm	mm	Kg	N	Lbs	g
RCND22B	22	6	3.5	4	8.2	3.8	38	8.54	8
RCND31B	31	6	3.5	6	9	9	89	20	20



***** We test the holding force of magnetic assembly by attaching it on a 20mm thick steel sheet at room temperature and then pulling it slowly in vertical direction with the device that is sensitive enough to record the strength at the moment when magnetic assembly is separated from the steel sheet. This is to give you a reference where the actual holding force in real application could be different with the change of, for example, pulling direction, thickness of the surface etc.

Address: RM 808 BLD#4, 99 Shangwu Dadao, Huaqiao Kunshan Jiangsu 215332 China
Tel: +86 512 5035 7618 Email: sales6@weizhongmagnetics.com

NdFeB rubber coated magnet with screw hole

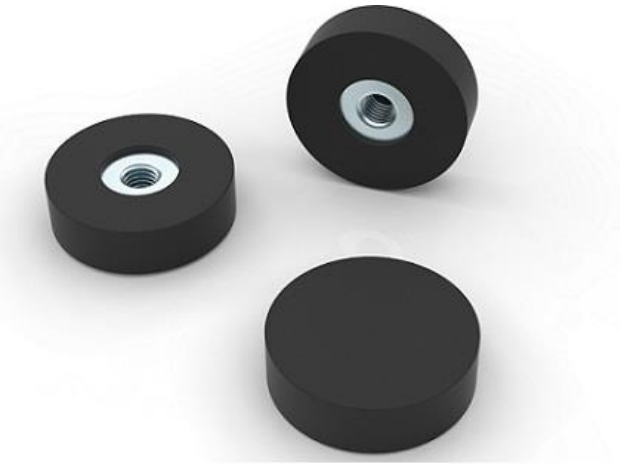

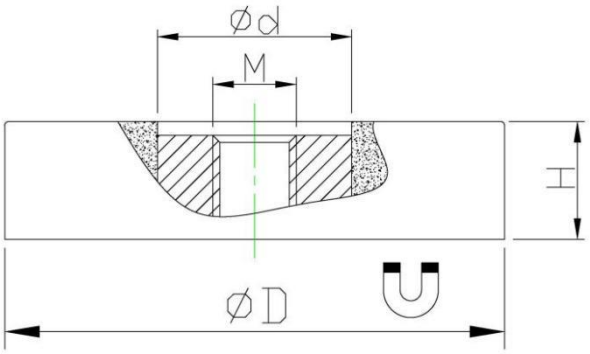

Item No.	D	H	d	M	Force			Weight
	mm	mm	mm		Kg	N	Lbs	g
RCND20F	20	6	8	M4	3	31	7	7.5
RCND29F	29	8.5	12	M5	11	108	22	28
RCND36F	36	8.5	14	M6	20	201	45	49
RCND45F	45	9.5	14	M6	30	301	67	80



***** We test the holding force of magnetic assembly by attaching it on a 20mm thick steel sheet at room temperature and then pulling it slowly in vertical direction with the device that is sensitive enough to record the strength at the moment when magnetic assembly is separated from the steel sheet. This is to give you a reference where the actual holding force in real application could be different with the change of, for example, pulling direction, thickness of the surface etc.

Address: RM 808 BLD#4, 99 Shangwu Dadao, Huaqiao Kunshan Jiangsu 215332 China
Tel: +86 512 5035 7618 Email: sales6@weizhongmagnetics.com

NdFeB rubber coated magnet with mounting hole



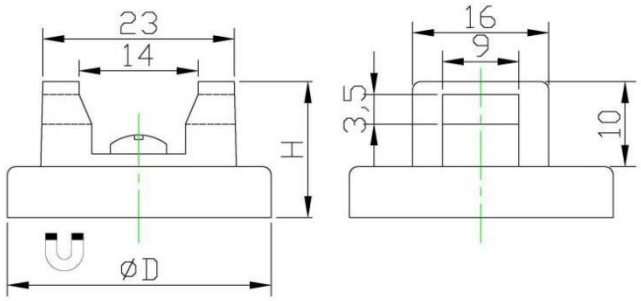

Item No.	D	H	Force			Weight
	mm	mm	Kg	N	Lbs	g
RCND22H	22	16	5.9	58	13	11.5
RCND31H	31	16	9	89	20	22.5
RCND43H	43	16	10	100	22	37.5



***** We test the holding force of magnetic assembly by attaching it on a 20mm thick steel sheet at room temperature and then pulling it slowly in vertical direction with the device that is sensitive enough to record the strength at the moment when magnetic assembly is separated from the steel sheet. This is to give you a reference where the actual holding force in real application could be different with the change of, for example, pulling direction, thickness of the surface etc.

Address: RM 808 BLD#4, 99 Shangwu Dadao, Huaqiao Kunshan Jiangsu 215332 China
Tel: +86 512 5035 7618 Email: sales6@weizhongmagnetics.com

Black rubber coated magnet with bore and counterbore



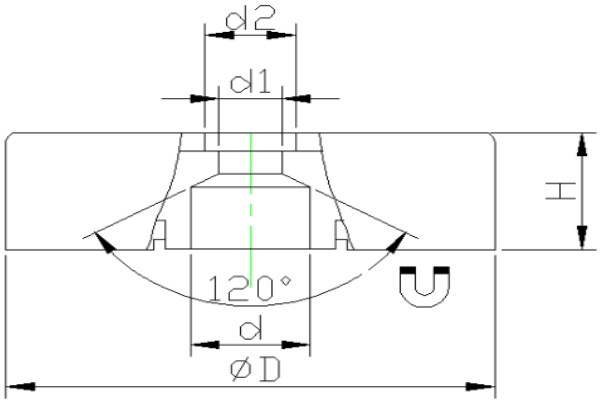

Item No.	D	H	d	d1	d2	Force			Magnet	Weight
	mm	mm	mm	mm	mm	Kg	N	Lbs		g
RCFB43C-B	43	12.5	10.5	5.5	8	8	80	18	Ferrite	76
RCNB43C-B	43	12.5	10.5	5.5	8	26	260	58	NdFeB	86



***** We test the holding force of magnetic assembly by attaching it on a 20mm thick steel sheet at room temperature and then pulling it slowly in vertical direction with the device that is sensitive enough to record the strength at the moment when magnetic assembly is separated from the steel sheet. This is to give you a reference where the actual holding force in real application could be different with the change of, for example, pulling direction, thickness of the surface etc.

Address: RM 808 BLD#4, 99 Shangwu Dadao, Huaqiao Kunshan Jiangsu 215332 China
Tel: +86 512 5035 7618 Email: sales6@weizhongmagnetics.com

Rectangular NdFeB Rubber coated magnet with female thread



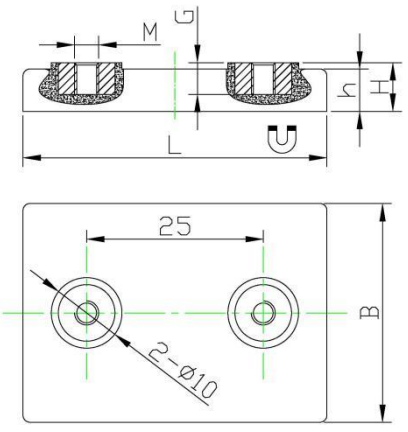

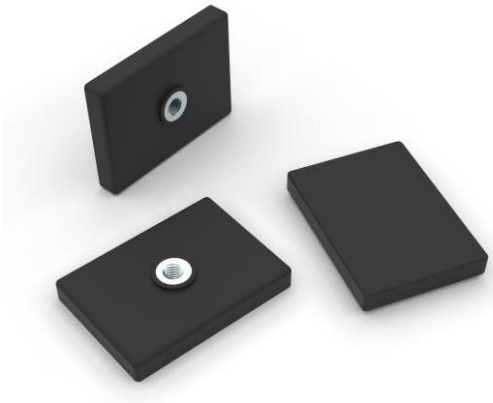

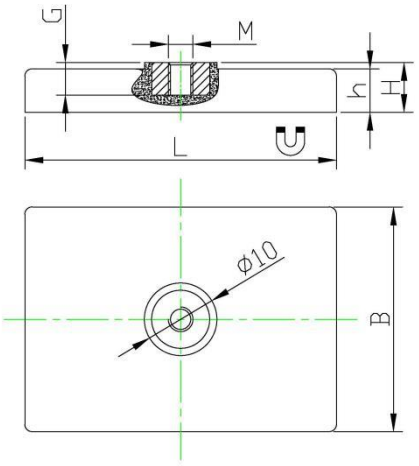

Item No.	L	B	H	h	MxG	Force			Weight
	mm	mm	mm	mm	mm	Kg	N	Lbs	g
RCNL43F-2M4	43	31	6.9	6	M4x4.5	13	130	28	28.5
RCNL43F-M4	43	31	6.9	6	M4x4.5	13	130	28	27.5



***** We test the holding force of magnetic assembly by attaching it on a 20mm thick steel sheet at room temperature and then pulling it slowly in vertical direction with the device that is sensitive enough to record the strength at the moment when magnetic assembly is separated from the steel sheet. This is to give you a reference where the actual holding force in real application could be different with the change of, for example, pulling direction, thickness of the surface etc.

Address: RM 808 BLD#4, 99 Shangwu Dadao, Huaqiao Kunshan Jiangsu 215332 China
Tel: +86 512 5035 7618 Email: sales6@weizhongmagnetics.com

Rectangular NdFeB rubber coated magnet with threaded stud

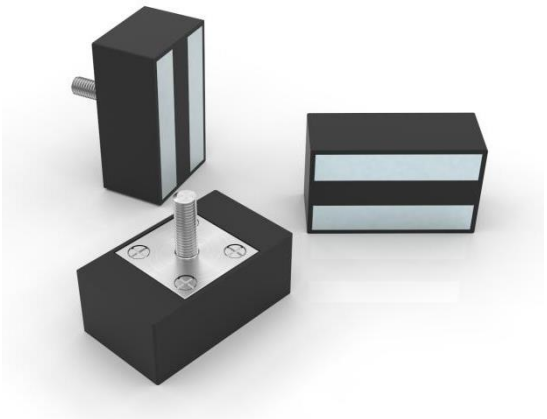

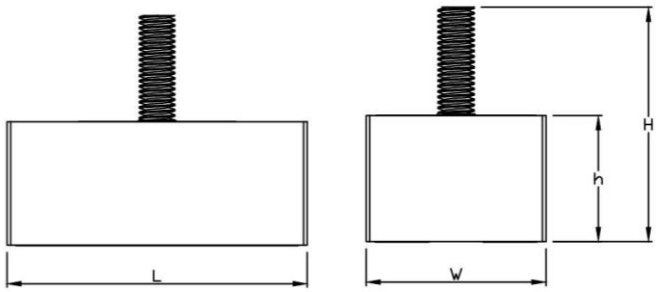

Item No.	L	W	h	H	M	Force			Weight
	mm	mm	mm	mm		Kg	N	Lbs	g
RCNL84M-1200	85	50	35	65	10	122	1200	270	975
RCNL84M-3500	85	50	35	65	10	356	3500	786	975



***** We test the holding force of magnetic assembly by attaching it on a 20mm thick steel sheet at room temperature and then pulling it slowly in vertical direction with the device that is sensitive enough to record the strength at the moment when magnetic assembly is separated from the steel sheet. This is to give you a reference where the actual holding force in real application could be different with the change of, for example, pulling direction, thickness of the surface etc.

Address: RM 808 BLD#4, 99 Shangwu Dadao, Huaqiao Kunshan Jiangsu 215332 China
Tel: +86 512 5035 7618 Email: sales6@weizhongmagnetics.com

Rectangular NdFeB rubber coated magnet with flange screws

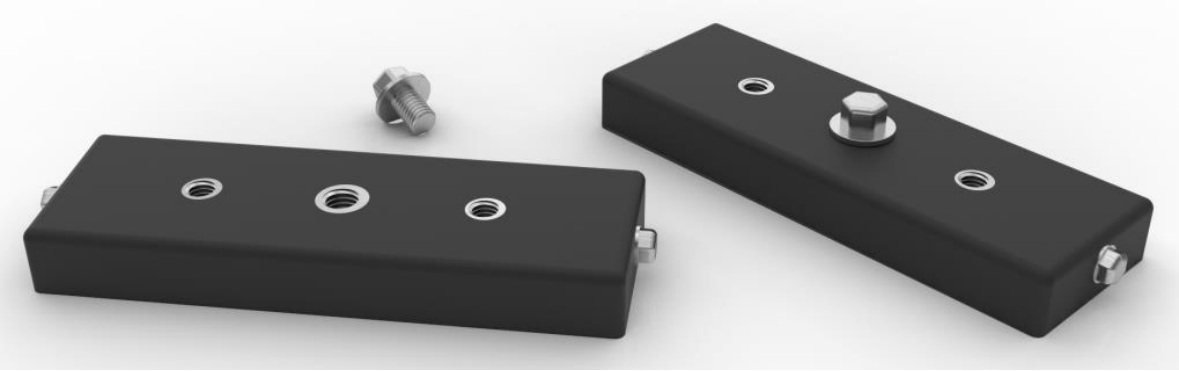

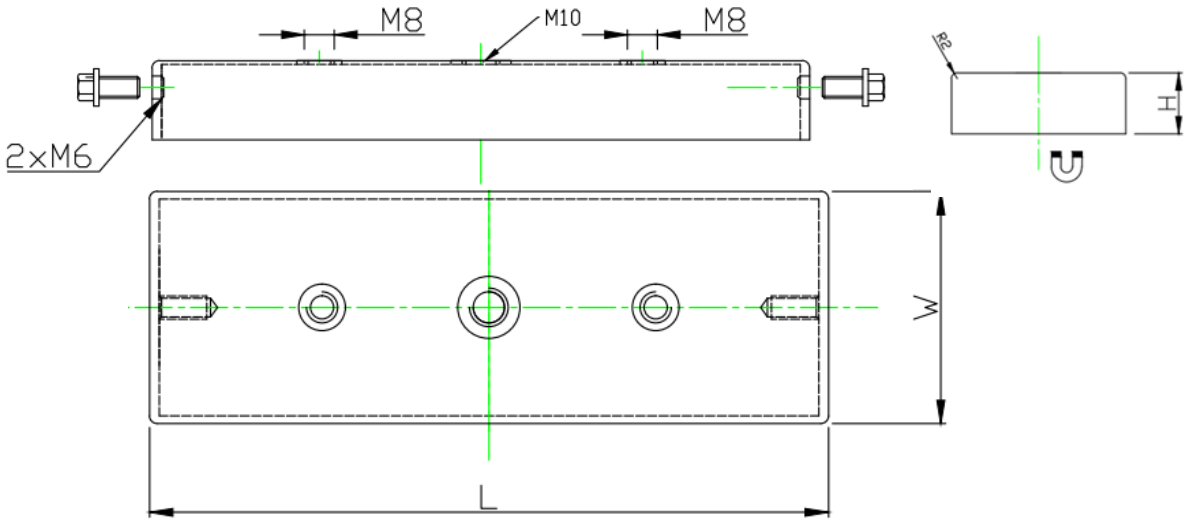

Item No.	L	W	H	Force			Weight
	mm	mm	mm	Kg	N	Lbs	g
RCHNL7F-N	175	59	20	340	3334	749	1630



* We test the holding force of magnetic assembly by attaching it on a 20mm thick steel sheet at room temperature and then pulling it slowly in vertical direction with the device that is sensitive enough to record the strength at the moment when magnetic assembly is separated from the steel sheet. This is to give you a reference where the actual holding force in real application could be different with the change of, for example, pulling direction, thickness of the surface etc.

Address: RM 808 BLD#4, 99 Shangwu Dadao, Huaqiao Kunshan Jiangsu 215332 China
Tel: +86 512 5035 7618 Email: sales6@weizhongmagnetics.com

Rectangular NdFeB rubber coated magnet with male thread

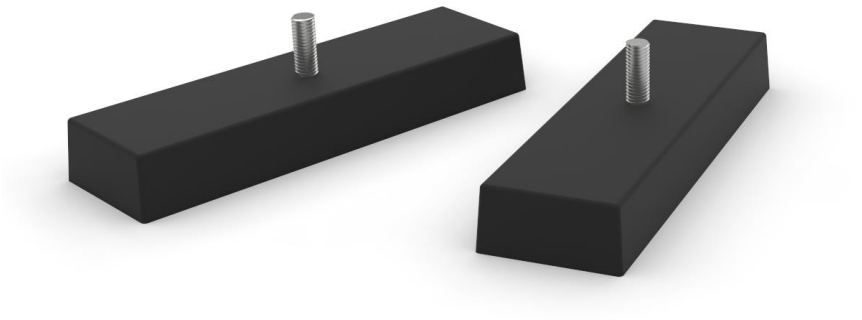

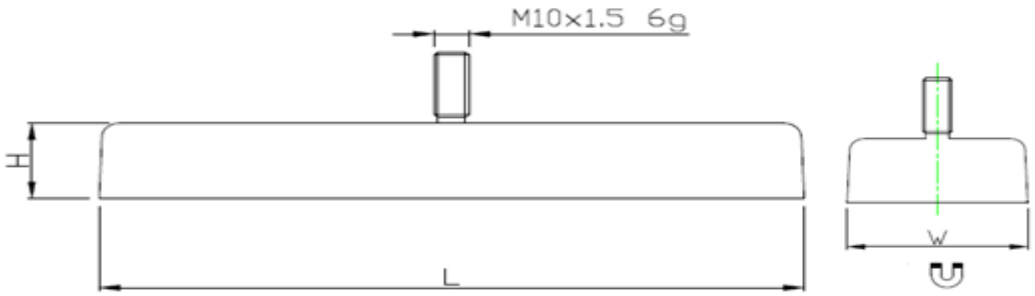

Item No.	L	W	H	Force			Weight
	mm	mm	mm	Kg	N	Lbs	g
RCHNL8M	203	61	27.5	304	2979	670	2050





***** We test the holding force of magnetic assembly by attaching it on a 20mm thick steel sheet at room temperature and then pulling it slowly in vertical direction with the device that is sensitive enough to record the strength at the moment when magnetic assembly is separated from the steel sheet. This is to give you a reference where the actual holding force in real application could be different with the change of, for example, pulling direction, thickness of the surface etc.

Address: RM 808 BLD#4, 99 Shangwu Dadao, Huaqiao Kunshan Jiangsu 215332 China
Tel: +86 512 5035 7618 Email: sales6@weizhongmagnetics.com

Rectangular NdFeB rubber coated magnet with male thread

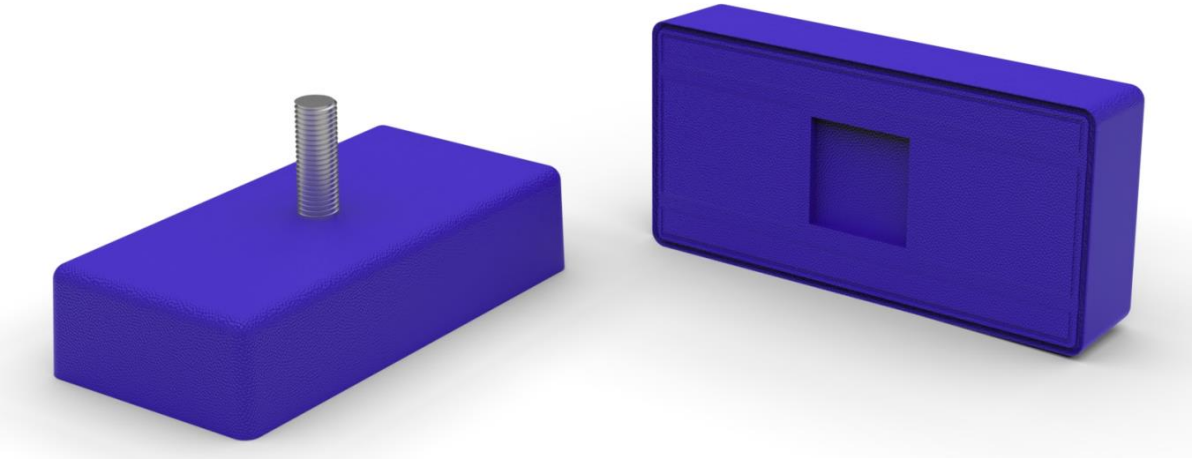

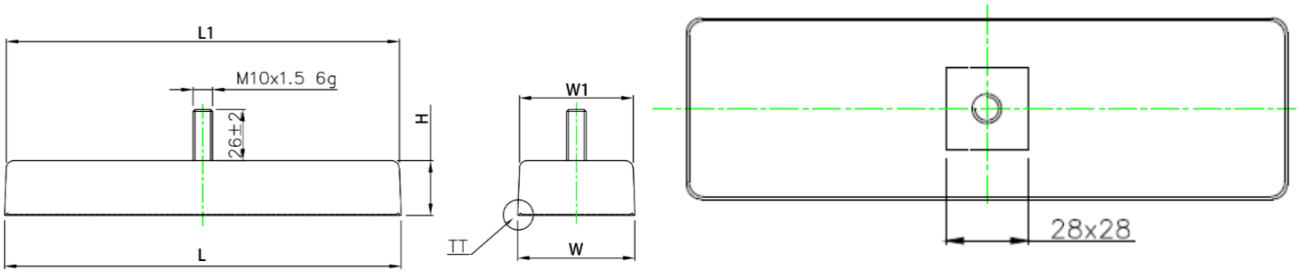

Item No.	L	L1	W	W1	H	M	Force			Weight
	mm	mm	mm	mm	mm		Kg	N	Lbs	g
RCHNL4M-VT	100.5	98.8	61	59.3	28	M10	100	1000	224	900
RCHNL5M-VT	125	123.3	61	59.3	28	M8/M10	200	2000	449	1000
RCHNL8M-VT	203	201	61	59	28	M10	400	4000	899	1693





***** We test the holding force of magnetic assembly by attaching it on a 20mm thick steel sheet at room temperature and then pulling it slowly in vertical direction with the device that is sensitive enough to record the strength at the moment when magnetic assembly is separated from the steel sheet. This is to give you a reference where the actual holding force in real application could be different with the change of, for example, pulling direction, thickness of the surface etc.

Address: RM 808 BLD#4, 99 Shangwu Dadao, Huaqiao Kunshan Jiangsu 215332 China
Tel: +86 512 5035 7618 Email: sales6@weizhongmagnetics.com

Oval shape NdFeB rubber coated magnet

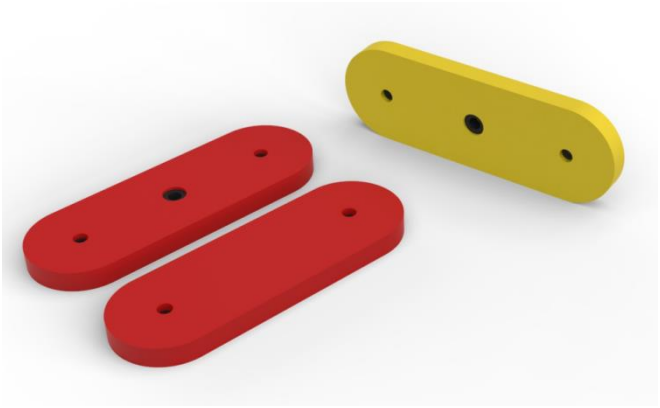

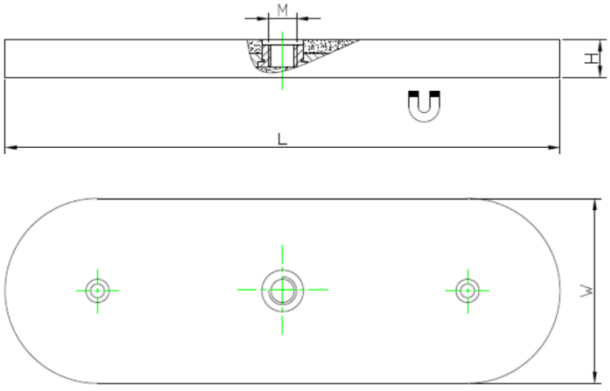

Item No.	L	W	H	M	Force			Weight
	mm	mm	mm		Kg	N	Lbs	g
RCNL120-R	120	40	8.1	M6	38	372	83	142
RCNL120-Y	120	40	8.1	M6	38	372	83	142

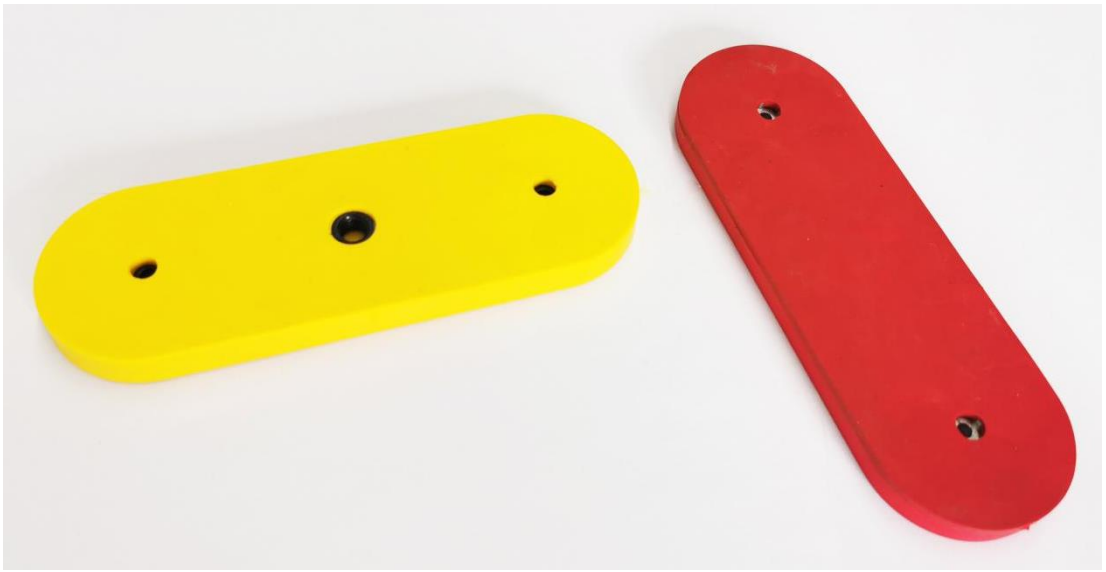

***** We test the holding force of magnetic assembly by attaching it on a 20mm thick steel sheet at room temperature and then pulling it slowly in vertical direction with the device that is sensitive enough to record the strength at the moment when magnetic assembly is separated from the steel sheet. This is to give you a reference where the actual holding force in real application could be different with the change of, for example, pulling direction, thickness of the surface etc.

Address: RM 808 BLD#4, 99 Shangwu Dadao, Huaqiao Kunshan Jiangsu 215332 China
Tel: +86 512 5035 7618 Email: sales6@weizhongmagnetics.com

NdFeB rubber coated magnet with J hook, rectangular



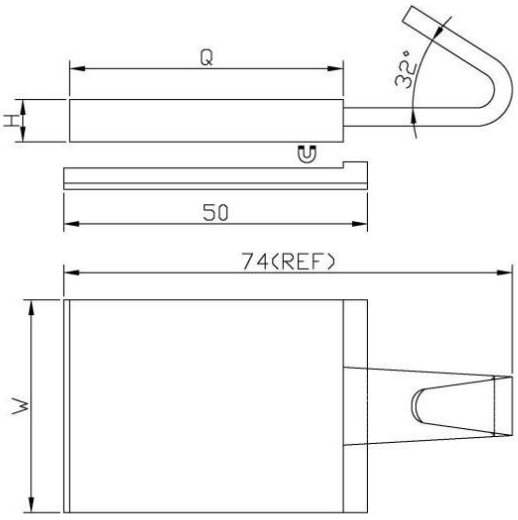

Item No.	L	W	Q	H	Force			Weight
	mm	mm	mm	mm	Kg	N	Lbs	g
RCNL74L	74	35	45	7	10	98	22	53.7





***** We test the holding force of magnetic assembly by attaching it on a 20mm thick steel sheet at room temperature and then pulling it slowly in vertical direction with the device that is sensitive enough to record the strength at the moment when magnetic assembly is separated from the steel sheet. This is to give you a reference where the actual holding force in real application could be different with the change of, for example, pulling direction, thickness of the surface etc.

Address: RM 808 BLD#4, 99 Shangwu Dadao, Huaqiao Kunshan Jiangsu 215332 China
Tel: +86 512 5035 7618 Email: sales6@weizhongmagnetics.com

Rubber coated NdFeB countersunk magnet



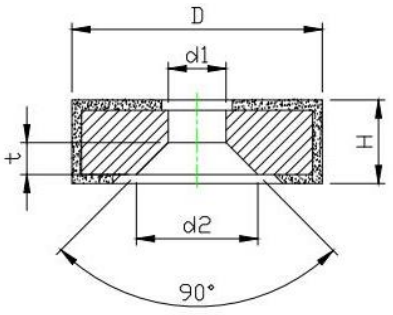

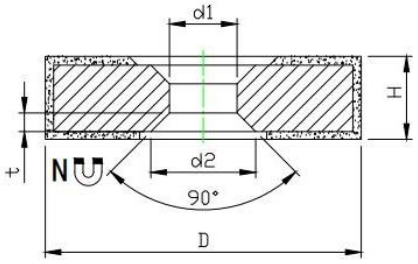

Item No.	D	d1	d2	H	t	Force		
	mm	mm	mm	mm	mm	Kg	N	Lbs
RCNC19.5x4.5	19.5	4.5	9.46	6.5	2.48	2.7	26	5.9
RCNC28.5x4.5	28.5	4.5	9.46	6.5	2.48	5.9	57	13
RCNC43.5x4.5	43.5	4.5	9.46	6.5	2.48	10.2	100	22
RCNC28.5x6.1	28.5	6.1	9.46	7.5	1.68	6.9	67	15





***** We test the holding force of magnetic assembly by attaching it on a 20mm thick steel sheet at room temperature and then pulling it slowly in vertical direction with the device that is sensitive enough to record the strength at the moment when magnetic assembly is separated from the steel sheet. This is to give you a reference where the actual holding force in real application could be different with the change of, for example, pulling direction, thickness of the surface etc.

Address: RM 808 BLD#4, 99 Shangwu Dadao, Huaqiao Kunshan Jiangsu 215332 China
Tel: +86 512 5035 7618 Email: sales6@weizhongmagnetics.com

Customized rubber coated magnet








***** We test the holding force of magnetic assembly by attaching it on a 20mm thick steel sheet at room temperature and then pulling it slowly in vertical direction with the device that is sensitive enough to record the strength at the moment when magnetic assembly is separated from the steel sheet. This is to give you a reference where the actual holding force in real application could be different with the change of, for example, pulling direction, thickness of the surface etc.

Address: RM 808 BLD#4, 99 Shangwu Dadao, Huaqiao Kunshan Jiangsu 215332 China
Tel: +86 512 5035 7618 Email: sales6@weizhongmagnetics.com

02 Pot magnet

Pot magnet is named after its shape.

By gluing a round shape magnet into a steel pot/cup you get a prototype pot magnet and based on that prototype there are so many extensions being made by adding different accessories, using different shape component.



PRODUCT INFORMATION

1) Our pot magnets come in different shapes, sizes, forces, and are mounted with different accessories to meet the application request as much as possible.
2) Standard coating is Nickel & Zinc, other coating like Chrome or blackening can be fulfilled.
3) Custom request on shape, strength and coating etc can be offered.

Address: RM 808 BLD#4, 99 Shangwu Dadao, Huaqiao Kunshan Jiangsu 215332 China
Tel: +86 512 5035 7618 Email: sales6@weizhongmagnetics.com

NdFeB flat pot magnet with countersunk



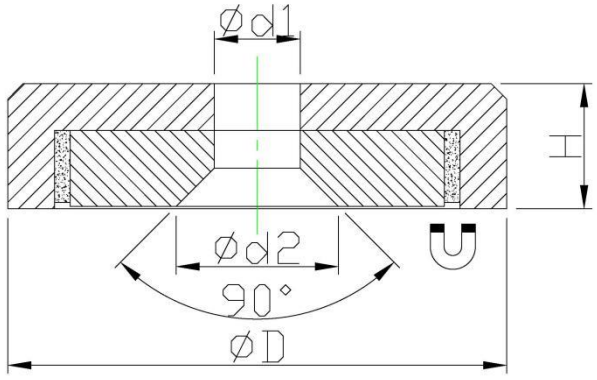

Item No.	D	H	d1	d2	Force			Weight
	mm	mm	mm	mm	Kg	N	Lbs	g
M-RBNC13	13	4.5	3.5	6.6	4	40	9	4
M-RBNC16	16	4.5	3.5	6.6	7	75	17	6
M-RBNC20	20	6	4.5	9.3	10	105	23	13
M-RBNC25	25	7	4.5	9	16	160	36	24
M-RBNC32	32	7	5.5	11	31	310	69	39
M-RBNC40	40	8	5.5	10.3	51	500	112	73
M-RBNC60	60	15	8.5	16	112	1097	246	250
M-RBNC75	75	18	10.5	19	162	1587	357	480



*We test the holding force of magnetic assembly by attaching it on a 20mm thick steel sheet at room temperature and then pulling it slowly in vertical direction with the device that is sensitive enough to record the strength at the moment when magnetic assembly is separated from the steel sheet. This is to give you a reference where the actual holding force in real application could be different with the change of, for example, pulling direction, thickness of the surface etc.

Address: RM 808 BLD#4, 99 Shangwu Dadao, Huaqiao Kunshan Jiangsu 215332 China
Tel: +86 512 5035 7618 Email: sales6@weizhongmagnetics.com

NdFeB countersunk pot magnet



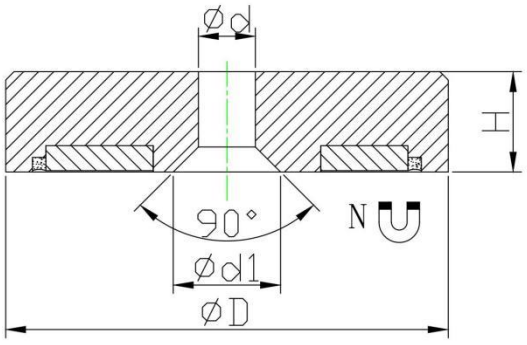

Item No.	D	d	d1	H	FORCE		
	mm	mm	mm	mm	Kg	N	Lbs
M-RBNC60Y	60	8.5	16	15	112	1097	246
M-RBNC66Y	66	8.5	18.82	15	130	1274	286
M-RBNC75Y	75	10.5	19	18	160	1568	352
M-RBNC80Y	80	10.5	20.5	18	220	2157	485

*We test the holding force of magnetic assembly by attaching it on a 20mm thick steel sheet at room temperature and then pulling it slowly in vertical direction with the device that is sensitive enough to record the strength at the moment when magnetic assembly is separated from the steel sheet. This is to give you a reference where the actual holding force in real application could be different with the change of, for example, pulling direction, thickness of the surface etc.

Address: RM 808 BLD#4, 99 Shangwu Dadao, Huaqiao Kunshan Jiangsu 215332 China
Tel: +86 512 5035 7618 Email: sales6@weizhongmagnetics.com

NdFeB flat pot magnet with screw hole



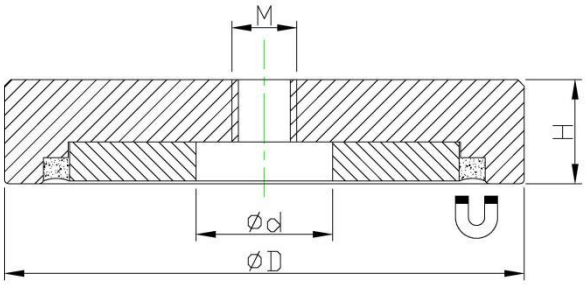

Item No.	D	d	H	M	Force			Weight
	mm	mm	mm		Kg	N	Lbs	g
M-RBNB25F	25	4.5	7	M4	16	160	36	24
M-RBNB32F	32	5.5	7	M5	33	330	74	40
M-RBNB40F	40	10.5	8	M5	51	500	112	74
M-RBNB50F	50	10.5	10	M8	81	800	180	140
M-RBNB60F	60	8.5	15	M8	95	931	209	250
M-RBNB63F	63	11.7	14	M10	112	1100	247	315
M-RBNB75F	74.6	11.7	15	M10	178	1750	393	479



*We test the holding force of magnetic assembly by attaching it on a 20mm thick steel sheet at room temperature and then pulling it slowly in vertical direction with the device that is sensitive enough to record the strength at the moment when magnetic assembly is separated from the steel sheet. This is to give you a reference where the actual holding force in real application could be different with the change of, for example, pulling direction, thickness of the surface etc.

Address: RM 808 BLD#4, 99 Shangwu Dadao, Huaqiao Kunshan Jiangsu 215332 China
Tel: +86 512 5035 7618 Email: sales6@weizhongmagnetics.com

NdFeB flat pot magnet with internal threaded bush



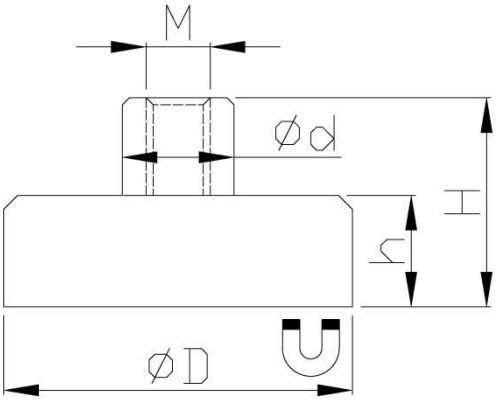

Item No.	D	d	H	h	M	Force			Weight
	mm	mm	mm	mm		Kg	N	Lbs	g
M-TNE6F	6	6	11.5	4.5	M3	0.5	5	1	2
M-TNE8F	8	6	11.5	4.5	M3	1.3	13	3	3
M-TNE10F	10	6	11.5	4.5	M3	2.5	25	5	4
M-TNE13F	13	6	11.5	4.5	M3	6	60	13	5
M-TNE16F	16	6	11.5	4.5	M4	9	95	21	7
M-TNE20F	20	8	13	6	M4	14	140	31	16
M-TNE25F	25	8	14	7	M4	20	200	45	27
M-TNE32F	32	10	15.5	7	M5	35	350	78	45
M-TNE40F	40	10	18	8	M6	68	670	150	80
M-TNE50F	50	15	18	9	M8	75	735	165	170
M-TNE60F	60	14	15	30	M8	113	1107	249	263
M-TNE75F	75	16	15	34	M10	164	1607	361	515



*We test the holding force of magnetic assembly by attaching it on a 20mm thick steel sheet at room temperature and then pulling it slowly in vertical direction with the device that is sensitive enough to record the strength at the moment when magnetic assembly is separated from the steel sheet. This is to give you a reference where the actual holding force in real application could be different with the change of, for example, pulling direction, thickness of the surface etc.

Address: RM 808 BLD#4, 99 Shangwu Dadao, Huaqiao Kunshan Jiangsu 215332 China
Tel: +86 512 5035 7618 Email: sales6@weizhongmagnetics.com

NdFeB flat pot magnet with threaded stud



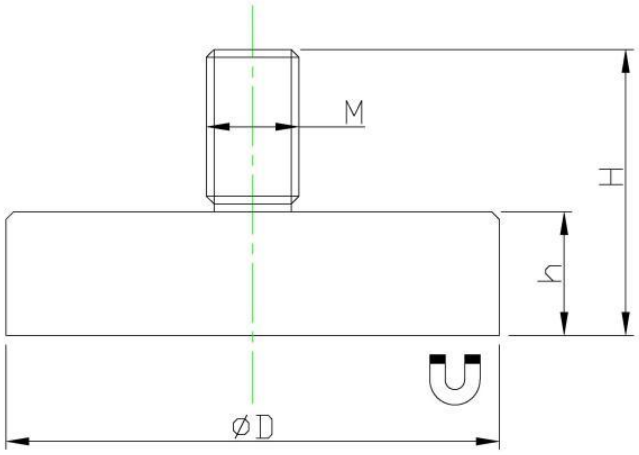

Item No.	D	H	h	M	Force			Weight
	mm	mm	mm		Kg	N	Lbs	g
M-TNE10M	10	12.5	4.5	M4	2.5	25	5	3
M-TNE13M	13	12.5	4.5	M5	6	60	13	5
M-TNE16M	16	12.5	4.5	M6	9	95	21	8
M-TNE20M	20	16	6	M6	14	140	31	15
M-TNE25M	25	17	7	M6	20	200	45	27
M-TNE32M	32	17	7	M6	35	350	78	42
M-TNE40M	40	20	8	M8	68	670	150	80
M-TNE48M	48	11.5	24	M8	85	833	187	135
M-TNE60M	60	15	30	M8	125	1225	275	260
M-TNE75M	75	15	34	M10	164	1607	361	550



*We test the holding force of magnetic assembly by attaching it on a 20mm thick steel sheet at room temperature and then pulling it slowly in vertical direction with the device that is sensitive enough to record the strength at the moment when magnetic assembly is separated from the steel sheet. This is to give you a reference where the actual holding force in real application could be different with the change of, for example, pulling direction, thickness of the surface etc.

Address: RM 808 BLD#4, 99 Shangwu Dadao, Huaqiao Kunshan Jiangsu 215332 China
Tel: +86 512 5035 7618 Email: sales6@weizhongmagnetics.com

NdFeB pot magnet with mounting hole



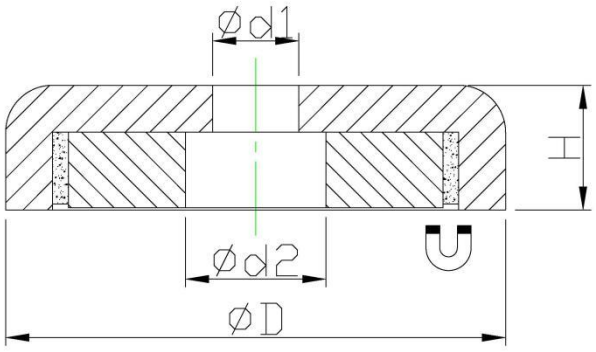

Item No.	D	d1	d2	H	Force			Weight
	mm	mm	mm	mm	Kg	N	Lbs	g
RBNB16	16	3.5	6.5	5	4	39	9	6
RBNB20	20	4.5	8	7	6	58	13	12
RBNB25	25	5.5	9	8	14	137	30	23
RBNB32	32	5.5	9	8	23	225	50	36
RBNB42	42	6.5	11	9	32	313	70	73
RBNB48	48	8.5	15	11.5	63	617	138	110
RBNB60	60	8.5	15	15	95	931	209	260
M-RBNB75	75	10.5	18	18	155	1519	341	429

Detailed: Steel pot punched or lathe machined (with M in beginning of part number).



*We test the holding force of magnetic assembly by attaching it on a 20mm thick steel sheet at room temperature and then pulling it slowly in vertical direction with the device that is sensitive enough to record the strength at the moment when magnetic assembly is separated from the steel sheet. This is to give you a reference where the actual holding force in real application could be different with the change of, for example, pulling direction, thickness of the surface etc.

Address: RM 808 BLD#4, 99 Shangwu Dadao, Huaqiao Kunshan Jiangsu 215332 China
Tel: +86 512 5035 7618 Email: sales6@weizhongmagnetics.com

NdFeB flat pot magnet



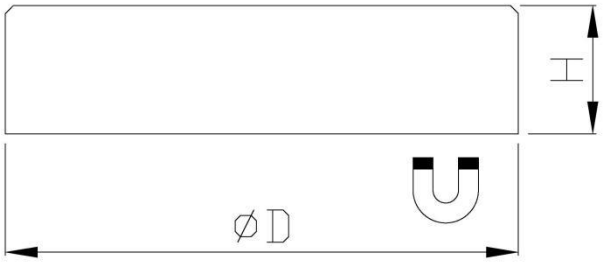

Item No.	D	H	Force			Weight
	mm	mm	Kg	N	Lbs	g
M-RBNE6	6	4.5	0.5	5	1	1
M-RBNE8	8	4.5	1.3	13	3	2
M-RBNE10	10	4.5	2.5	25	5	3
M-RBNE13	13	4.5	6	60	13	4
M-RBNE16	16	4.5	9	95	21	6
M-RBNE20	20	6	14	140	31	14
M-RBNE25	25	7	20	200	45	25
M-RBNE32	32	7	35	350	78	41
M-RBNE42	42	9	68	666	149	85
M-RBNE48	48	11.5	85	833	187	130
M-RBNE60	60	15	125	1225	275	260



*We test the holding force of magnetic assembly by attaching it on a 20mm thick steel sheet at room temperature and then pulling it slowly in vertical direction with the device that is sensitive enough to record the strength at the moment when magnetic assembly is separated from the steel sheet. This is to give you a reference where the actual holding force in real application could be different with the change of, for example, pulling direction, thickness of the surface etc.

Address: RM 808 BLD#4, 99 Shangwu Dadao, Huaqiao Kunshan Jiangsu 215332 China
Tel: +86 512 5035 7618 Email: sales6@weizhongmagnetics.com

NdFeB pot magnet with internal threaded hole



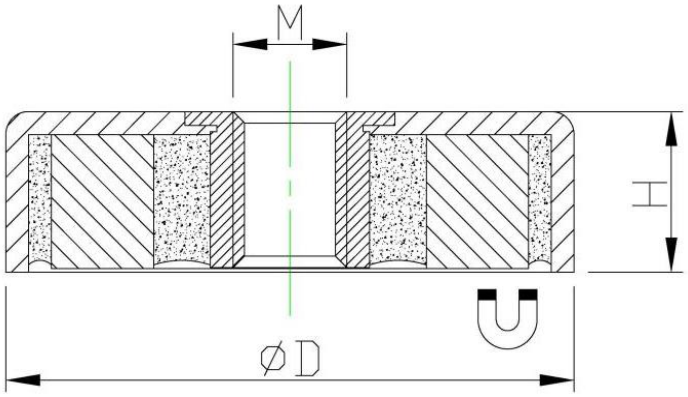

Item No	D	H	M	Force			Weight
	mm	mm		Kg	N	Lbs	g
RBNB10F	10	4.5	M3	1.1	11	2.4	3
RBNB13F	13	4.5	M3	3	29	6	5
RBNB16F	16	4.5	M4	5	50	11	7
RBNB20F	20	6	M4	7	73	16	11
RBNB25F	25	7	M5	14	139	31	21
RBNB32F	32	7	M6	26	254	57	36
RBNB40F	40	8	M6	40	392	88	68
RBNB48F	48	11.5	M8	58	568	127	137
RBNB60F	60	15	M8	92	901	202	263



*We test the holding force of magnetic assembly by attaching it on a 20mm thick steel sheet at room temperature and then pulling it slowly in vertical direction with the device that is sensitive enough to record the strength at the moment when magnetic assembly is separated from the steel sheet. This is to give you a reference where the actual holding force in real application could be different with the change of, for example, pulling direction, thickness of the surface etc.

Address: RM 808 BLD#4, 99 Shangwu Dadao, Huaqiao Kunshan Jiangsu 215332 China
Tel: +86 512 5035 7618 Email: sales6@weizhongmagnetics.com

NdFeB flat pot magnet with stainless steel cover



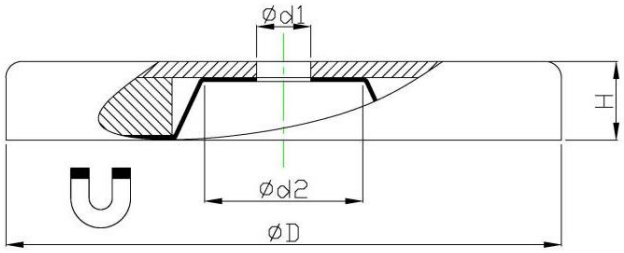

Item No.	D	H	d1	d2	Force			Weight
	mm	mm	mm	mm	Kg	N	Lbs	g
RBNM30	30.70	4.70	3.20	6.00	15	155	35	21
RBNM40	36.00	6.90	4.75	9.65	29	289	65	38
RBNM50	51.71	7.60	4.90	15.24	40	400	90	65
RBNM60	60.32	8.90	6.86	16.26	50	489	110	117
RBNM70	68.20	9.50	6.98	17.48	63	622	140	155
RBNM80	81.30	10.60	7.20	22.35	88	867	195	210
RBNM90	124.46	12.70	12.70	33.00	136	1334	300	540



*We test the holding force of magnetic assembly by attaching it on a 20mm thick steel sheet at room temperature and then pulling it slowly in vertical direction with the device that is sensitive enough to record the strength at the moment when magnetic assembly is separated from the steel sheet. This is to give you a reference where the actual holding force in real application could be different with the change of, for example, pulling direction, thickness of the surface etc.

Address: RM 808 BLD#4, 99 Shangwu Dadao, Huaqiao Kunshan Jiangsu 215332 China
Tel: +86 512 5035 7618 Email: sales6@weizhongmagnetics.com

Ferrite flat pot magnet with through hole

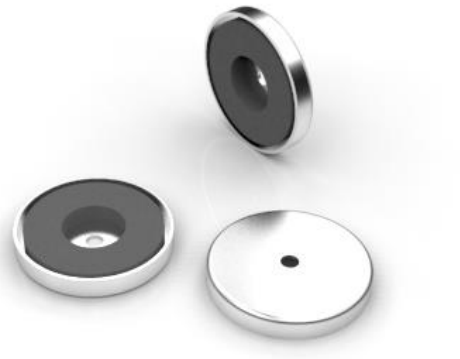

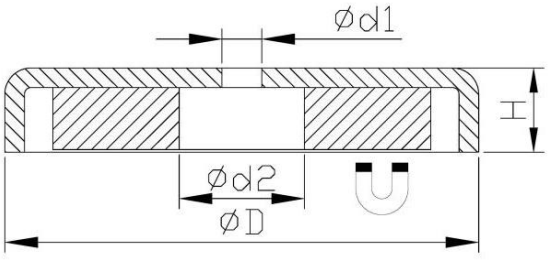

Item No.	D	H	d1	d2	Force			Weight
	mm	mm	mm	mm	Kg	N	Lbs	g
RBFB20	30.86	4.83	3.96	6.5	5	49	11	16
RBFB30	32.00	4.57	3.81	10.5	5	53	12	16.5
RBFB36	36.00	6.60	4.83	9.5	7	66	15	32
RBFB50	51.56	7.39	4.83	22	16	155	35	66
RBFB60	60.33	8.89	6.86	24	22	222	50	111.5
RBFB70	66.68	9.35	7.11	25.4	36	356	80	154
RBFB75	73.91	9.40	7.11	25.4	38	378	85	183
RBFB80	81.28	10.54	7.11	32	45	445	100	241.5
RBFB85	96.27	12.96	12.7	32	54	534	120	420
RBFB90	124.46	12.44	12.7	45	95	934	210	684



*We test the holding force of magnetic assembly by attaching it on a 20mm thick steel sheet at room temperature and then pulling it slowly in vertical direction with the device that is sensitive enough to record the strength at the moment when magnetic assembly is separated from the steel sheet. This is to give you a reference where the actual holding force in real application could be different with the change of, for example, pulling direction, thickness of the surface etc.

Address: RM 808 BLD#4, 99 Shangwu Dadao, Huaqiao Kunshan Jiangsu 215332 China
Tel: +86 512 5035 7618 Email: sales6@weizhongmagnetics.com

Ferrite flat pot magnet





Item No.	D	H	Force			Weight
	mm	mm	Kg	N	Lbs	g
RBFE10	10	4.5	0.3	3	0.6	2
RBFE13	13	4.5	0.5	5	1.1	3
RBFE16	16	4.5	1.5	15	3.3	5
RBFE20	20	6	2.2	22	5	10
RBFE25	25	7	4	40	9	18
RBFE32	32	7	8	80	18	29
RBFE36	36	7.7	10	100	22	39
RBFE40	40	8	12	125	28	55
RBFE47	47	9	18	180	40	84
RBFE50	50	10	22	220	49	102
RBFE57	57	10.5	28	280	63	141
RBFE63	63	14	35	350	78	226
RBFE80	80	18	61	600	135	468
RBFE100	100	22	91	900	202	915



*We test the holding force of magnetic assembly by attaching it on a 20mm thick steel sheet at room temperature and then pulling it slowly in vertical direction with the device that is sensitive enough to record the strength at the moment when magnetic assembly is separated from the steel sheet. This is to give you a reference where the actual holding force in real application could be different with the change of, for example, pulling direction, thickness of the surface etc.

Address: RM 808 BLD#4, 99 Shangwu Dadao, Huaqiao Kunshan Jiangsu 215332 China
Tel: +86 512 5035 7618 Email: sales6@weizhongmagnetics.com

Ferrite pot magnet with countersunk hole

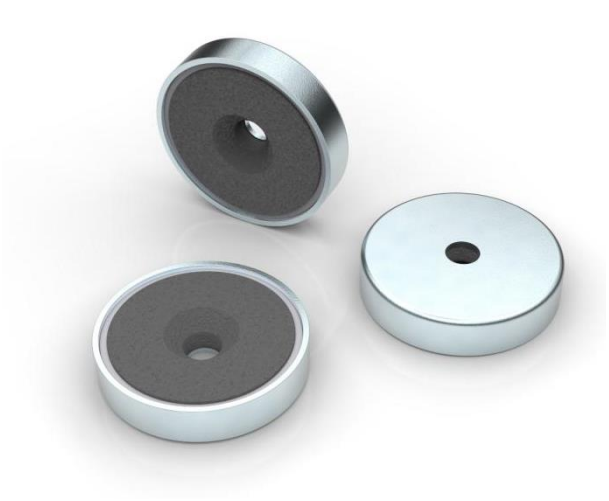

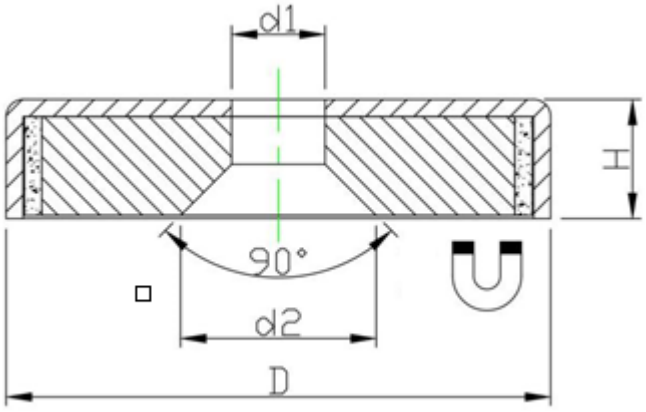

Item No.	D	d1	d2	H	Force			Weight
	mm	mm	mm	mm	Kg	N	Lbs	g
RBFC16	16	3.5	6.5	4.5	1.4	14	3.1	4
RBFC20	20	4.1	9.4	6	2.7	27	6	9
RBFC25	25	5.5	11.5	7	3.6	36	8	17
RBFC32	32	5.5	11.5	7	7.3	72	16.1	27
RBFC40	40	5.5	11.5	8	9.2	90	20.2	52



*We test the holding force of magnetic assembly by attaching it on a 20mm thick steel sheet at room temperature and then pulling it slowly in vertical direction with the device that is sensitive enough to record the strength at the moment when magnetic assembly is separated from the steel sheet. This is to give you a reference where the actual holding force in real application could be different with the change of, for example, pulling direction, thickness of the surface etc.

Address: RM 808 BLD#4, 99 Shangwu Dadao, Huaqiao Kunshan Jiangsu 215332 China
Tel: +86 512 5035 7618 Email: sales6@weizhongmagnetics.com

Ferrite flat pot magnet with clinch-nut



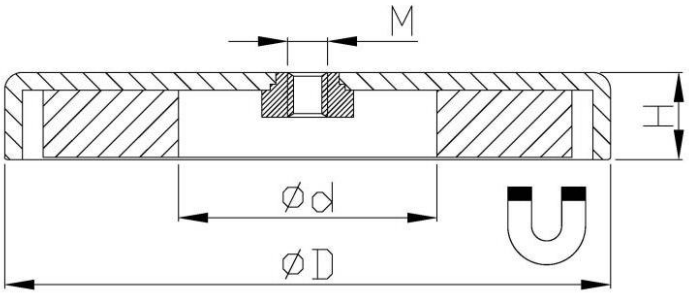

Item No	D	H	d	M	Force			Weight
	mm	mm	mm		Kg	N	Lbs	g
RBFB50F-8-32	51.56	7.39	22	8-32	16	156	35	69

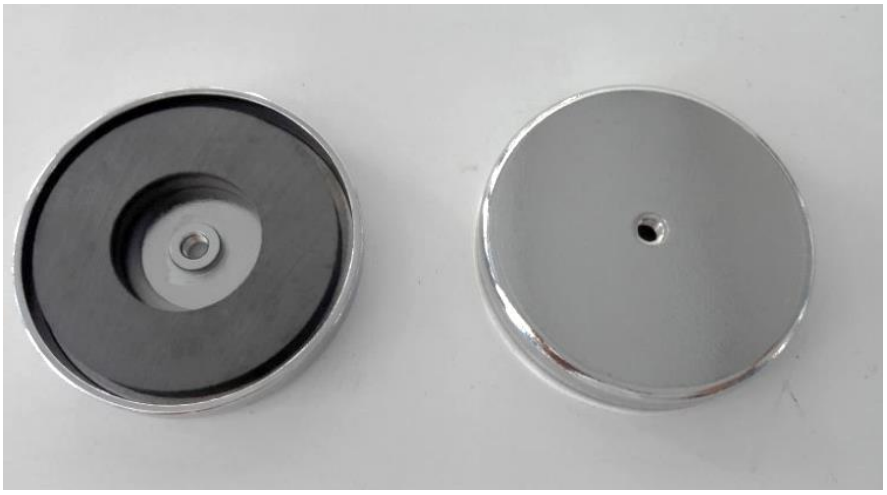

*We test the holding force of magnetic assembly by attaching it on a 20mm thick steel sheet at room temperature and then pulling it slowly in vertical direction with the device that is sensitive enough to record the strength at the moment when magnetic assembly is separated from the steel sheet. This is to give you a reference where the actual holding force in real application could be different with the change of, for example, pulling direction, thickness of the surface etc.

Address: RM 808 BLD#4, 99 Shangwu Dadao, Huaqiao Kunshan Jiangsu 215332 China
Tel: +86 512 5035 7618 Email: sales6@weizhongmagnetics.com

Ferrite flat pot magnet with internal threaded bush



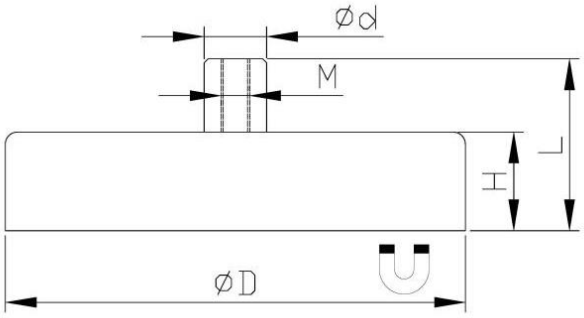

Item No.	D	H	L	d	M	Force			Weight
	mm	mm	mm	mm		Kg	N	Lbs	g
TFE10F	10	4.5	11.5	6	M3	0.4	4	0.9	3
TFE13F	13	4.5	11.5	6	M3	1	10	2	4
TFE16F	16	4.5	11.5	6	M3	1.8	18	4	7
TFE20F	20	6	13	6	M3	3	30	6.7	14
TFE25F	25	7	15	8	M4	4	40	9	21
TFE32F	32	7	15	8	M4	8	80	18	33
TFE36F	36	7.7	16	8	M4	10	100	22	44
TFE40F	40	8	18	10	M5	12	125	28	59
TFE47F	47	9	17	8	M4	18	180	40	85
TFE50F	50	10	22	12	M6	22	220	49	111
TFE57F	57	10.5	22.5	12	M6	28	280	63	153
TFE63F	63	14	30	15	M8	35	350	78	247
TFE80F	80	18	34	20	M10	61	600	135	498
TFE100F	100	22	43	22	M12	92	900	202	956





*We test the holding force of magnetic assembly by attaching it on a 20mm thick steel sheet at room temperature and then pulling it slowly in vertical direction with the device that is sensitive enough to record the strength at the moment when magnetic assembly is separated from the steel sheet. This is to give you a reference where the actual holding force in real application could be different with the change of, for example, pulling direction, thickness of the surface etc.

Address: RM 808 BLD#4, 99 Shangwu Dadao, Huaqiao Kunshan Jiangsu 215332 China
Tel: +86 512 5035 7618 Email: sales6@weizhongmagnetics.com

NdFeB flat pot magnet with cable holder



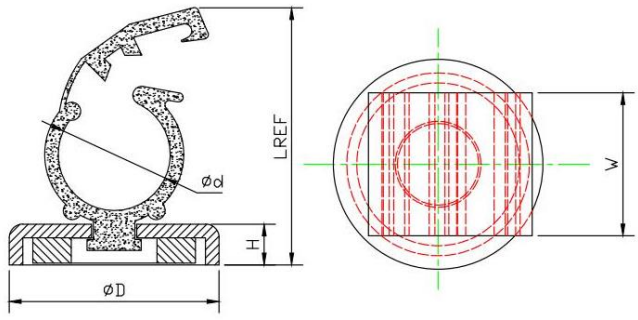

Item No.	D	d	L	W	H	FORCE			Weight
	mm	mm	mm	mm	mm	Kg	N	Lbs	
Q-RBNB23.2-G	23.2	12.4	30	15.8	4.5	6.8	66	15	12.3

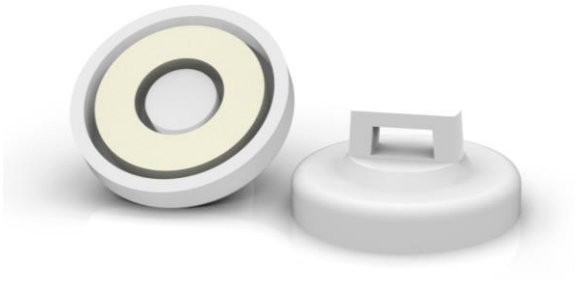

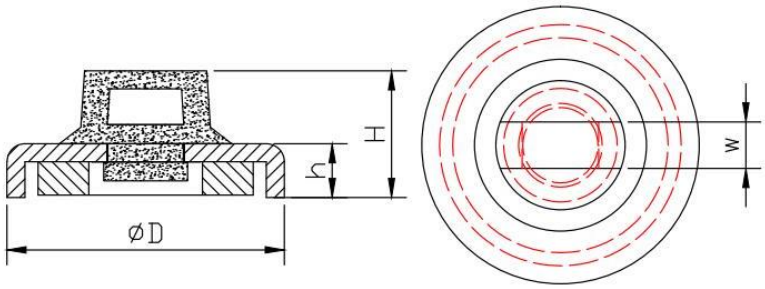

Item No.	D	h	W	H	FORCE			Weight
	mm	mm	mm	mm	Kg	N	Lbs	
Q-RBNB23.2W-N	23.2	4.5	3.9	10.6	6.8	66	15	10.3



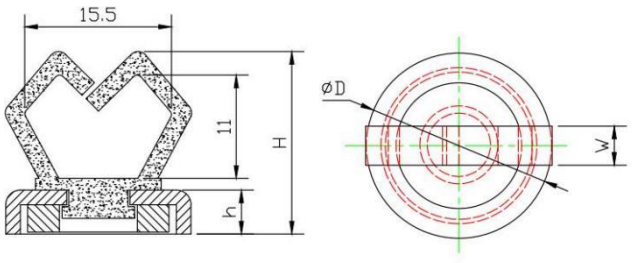

Item No.	D	h	W	H	FORCE			Weight
	mm	mm	mm	mm	Kg	N	Lbs	
Q-RBNB19B-M	19	4.5	4	18.7	7.2	71	16	7.3

*We test the holding force of magnetic assembly by attaching it on a 20mm thick steel sheet at room temperature and then pulling it slowly in vertical direction with the device that is sensitive enough to record the strength at the moment when magnetic assembly is separated from the steel sheet. This is to give you a reference where the actual holding force in real application could be different with the change of, for example, pulling direction, thickness of the surface etc.

Address: RM 808 BLD#4, 99 Shangwu Dadao, Huaqiao Kunshan Jiangsu 215332 China
Tel: +86 512 5035 7618 Email: sales6@weizhongmagnetics.com

NdFeB flat pot magnet with through hole



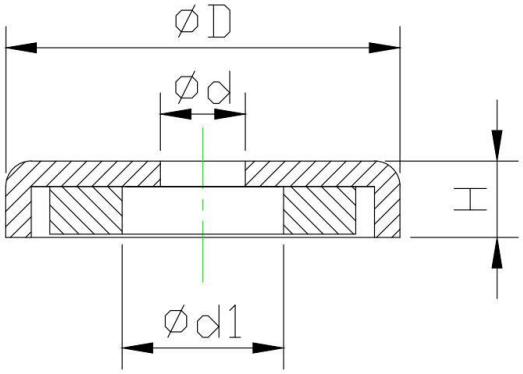

Item No.	D	d	d1	H	Force			Weight	Color
	mm	mm	mm	mm	Kg	N	Lbs		
Q-RBNB23.2-5	23.2	5	9.5	4.5	11.8	115	26	9.7	Zinc
Q-RBNB23.2B-6.5	23.2	6.5	9.5	4.5	11.8	115	26	10.1	Black
Q-RBNB19B-6.5	19	6.5	8	4.5	7.2	71	16	6.6	Black
Q-RBNB19W-6.5	19	6.5	8	4.5	7.2	71	16	6.7	White







*We test the holding force of magnetic assembly by attaching it on a 20mm thick steel sheet at room temperature and then pulling it slowly in vertical direction with the device that is sensitive enough to record the strength at the moment when magnetic assembly is separated from the steel sheet. This is to give you a reference where the actual holding force in real application could be different with the change of, for example, pulling direction, thickness of the surface etc.

Address: RM 808 BLD#4, 99 Shangwu Dadao, Huaqiao Kunshan Jiangsu 215332 China
Tel: +86 512 5035 7618 Email: sales6@weizhongmagnetics.com

03 Magnetic hooks

Powerful magnetic hooks is one of our largest group of magnet assemblies.

The earliest model is the ferrite flat pot magnet with hook, white powder painted, starting from which this group has been growing steadily, so there have been modifications, updates on the original one.



PRODUCT INFORMATION

1) We have a large assortment of magnetic hooks, such as pot magnet with hook, channel magnet with hook and plastic cased magnet with hooks etc.
2) Coating like Nickel, Zinc, white powder coated or colorful powder coated etc can be offered according to request.
3) Custom request on design, strength etc is workable.

Address: RM 808 BLD#4, 99 Shangwu Dadao, Huaqiao Kunshan Jiangsu 215332 China
Tel: +86 512 5035 7618 Email: sales6@weizhongmagnetics.com

NdFeB flat pot magnet with hook



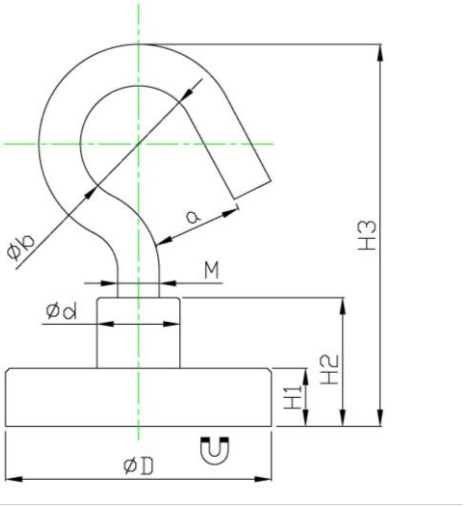

Item No.	D	d	H1	H2	H3	a	b	M	Force			Weight
	mm	mm	mm	mm	mm	mm	mm		Kg	N	Lbs	g
M-TNE10K	10	5	4.5	11.5	26	3.5	4	M3	3	29	6	5
M-TNE13K	13	5	4.5	11.5	26	3.5	4	M3	5	49	11	7
M-TNE16K	16	6	4.5	11.5	27	4.5	5.5	M4	8	78	17	11
M-TNE20K	20	8	6	13	29	4.5	5.5	M4	12	122	27	20
M-TNE25K	25	8	7	14	30	4.5	5.5	M4	18	176	39	30
M-TNE32K	32	10	7	15.5	45	11	14	M5	30	294	66	52
M-TNE40K	40	15	9	18	59	19	26	M6	55	539	121	115
M-TNE50K	50	15	9	18	62	17	23	M8	75	735	165	170
M-TNE63K	63	18	10	22	66	17	23	M8	105	1029	231	273



*We test the holding force of magnetic assembly by attaching it on a 20mm thick steel sheet at room temperature and then pulling it slowly in vertical direction with the device that is sensitive enough to record the strength at the moment when magnetic assembly is separated from the steel sheet. This is to give you a reference where the actual holding force in real application could be different with the change of, for example, pulling direction, thickness of the surface etc.

Address: RM 808 BLD#4, 99 Shangwu Dadao, Huaqiao Kunshan Jiangsu 215332 China
Tel: +86 512 5035 7618 Email: sales6@weizhongmagnetics.com

NdFeB flat pot magnet with eyelet



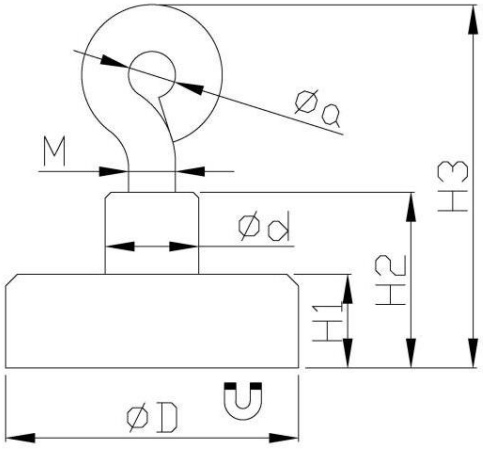

Item No.	D	d	H1	H2	H3	a	M	Force			weight
	mm	mm	mm	mm	mm	mm		Kg	N	Lbs	g
M-TNE16O	16	6	4.5	11.5	27	4.5	M4	8	78	17	10
M-TNE25O	25	8	7	14	30	4.5	M4	18	176	39	29
M-TNE32O	32	10	7	15.5	45	11	M5	30	294	66	53
M-TNE40O	40	15	9	18	59	19	M6	55	539	121	110



*We test the holding force of magnetic assembly by attaching it on a 20mm thick steel sheet at room temperature and then pulling it slowly in vertical direction with the device that is sensitive enough to record the strength at the moment when magnetic assembly is separated from the steel sheet. This is to give you a reference where the actual holding force in real application could be different with the change of, for example, pulling direction, thickness of the surface etc.

Address: RM 808 BLD#4, 99 Shangwu Dadao, Huaqiao Kunshan Jiangsu 215332 China
Tel: +86 512 5035 7618 Email: sales6@weizhongmagnetics.com

NdFeB pot magnet with countersunk and eyebolt



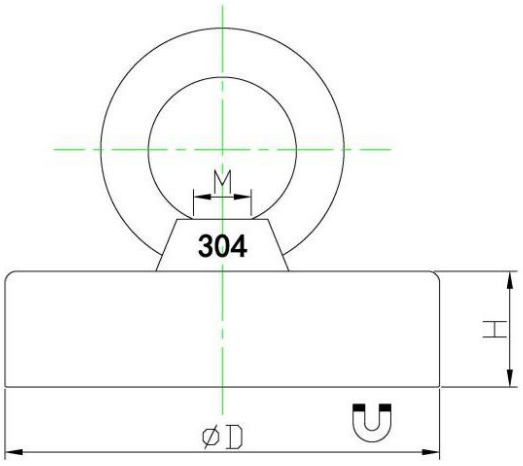

Item No.	D	H	M	Force			Weight
	mm	mm		Kg	N	Lbs	g
M-RBNB48R	48	18	8	50	490	110	295
M-RBNB60R	60	18	8	100	980	220	438
M-RBNB75R	75	20	10	200	1960	440	754
M-RBNB94R	94	20	10	300	2940	661	1151
M-RBNB116R	116	25	12	400	3920	881	2175
M-RBNB135R	135	25	12	600	5880	1322	2910



*We test the holding force of magnetic assembly by attaching it on a 20mm thick steel sheet at room temperature and then pulling it slowly in vertical direction with the device that is sensitive enough to record the strength at the moment when magnetic assembly is separated from the steel sheet. This is to give you a reference where the actual holding force in real application could be different with the change of, for example, pulling direction, thickness of the surface etc.

Address: RM 808 BLD#4, 99 Shangwu Dadao, Huaqiao Kunshan Jiangsu 215332 China
Tel: +86 512 5035 7618 Email: sales6@weizhongmagnetics.com

Double sided NdFeB pot magnet with eyebolt



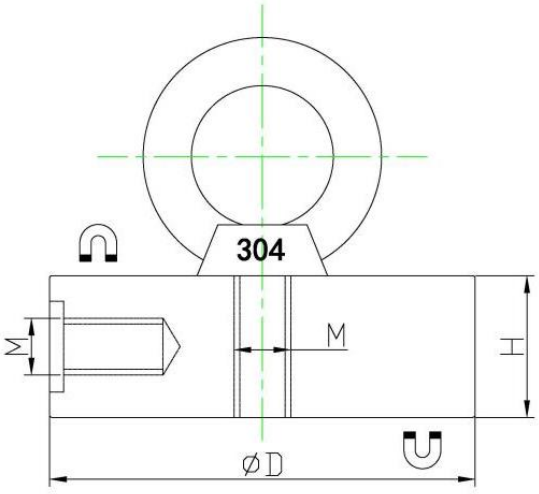

Item No.	D	H	M	Force			Weight
	mm	mm		Kg	N	Lbs	g
M-RBNB48T	48	20	8	50x2	490x2	110x2	315
M-RBNB60T	60	20	8	100x2	980x2	220x2	475
M-RBNB75T	75	25	10	200x2	1960x2	440x2	1100
M-RBNB94T	94	35	10	300x2	2940x2	661x2	1860
M-RBNB116T	116	40	12	400x2	3920x2	881x2	3335
M-RBNB135T	135	40	12	600x2	5880x2	1322x2	4350



*We test the holding force of magnetic assembly by attaching it on a 20mm thick steel sheet at room temperature and then pulling it slowly in vertical direction with the device that is sensitive enough to record the strength at the moment when magnetic assembly is separated from the steel sheet. This is to give you a reference where the actual holding force in real application could be different with the change of, for example, pulling direction, thickness of the surface etc.

Address: RM 808 BLD#4, 99 Shangwu Dadao, Huaqiao Kunshan Jiangsu 215332 China
Tel: +86 512 5035 7618 Email: sales6@weizhongmagnetics.com

NdFeB flat pot magnet with hook, white powder coated



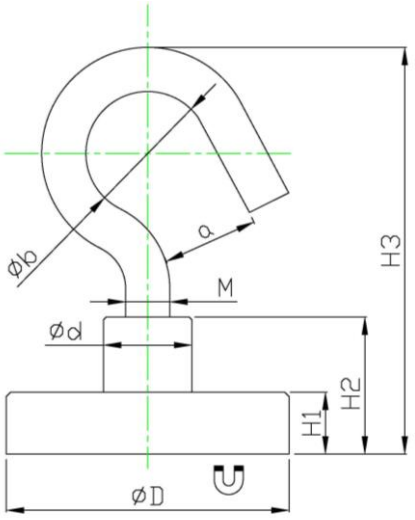

Item No.	D	d	H1	H2	H3	a	b	M	Force			color
	mm	mm	mm	mm	mm	mm	mm		Kg	N	Lbs	
M-TNE16K-W	16.3	6.3	4.8	11.8	27.3	4.2	5.2	M4	5	49	11	White
M-TNE25K-W	25.3	8.3	7.3	14.3	30.3	4.2	5.2	M4	18	176	39	White
M-TNE32K-W	32.3	10.3	7.3	15.8	45.3	10.8	13.7	M5	28	274	61	White
M-TNE40K-W	40.3	15.3	9.3	18.3	59.3	18.7	25.7	M6	39	382	86	White



*We test the holding force of magnetic assembly by attaching it on a 20mm thick steel sheet at room temperature and then pulling it slowly in vertical direction with the device that is sensitive enough to record the strength at the moment when magnetic assembly is separated from the steel sheet. This is to give you a reference where the actual holding force in real application could be different with the change of, for example, pulling direction, thickness of the surface etc.

Address: RM 808 BLD#4, 99 Shangwu Dadao, Huaqiao Kunshan Jiangsu 215332 China
Tel: +86 512 5035 7618 Email: sales6@weizhongmagnetics.com

NdFeB flat pot magnet with eyelet, white powder coated



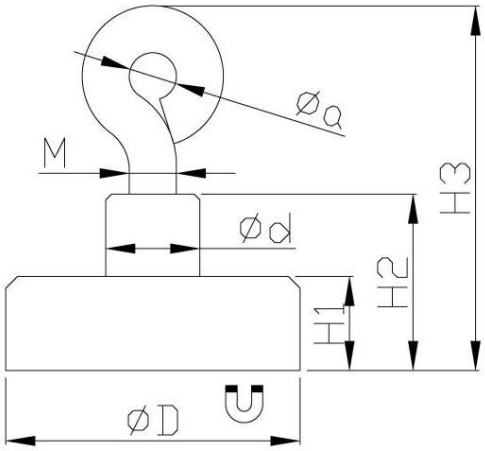

Item No.	D	d	H1	H2	H3	a	M	Force			weight
	mm	mm	mm	mm	mm	mm		Kg	N	Lbs	g
M-TNE16O-W	16.3	6.3	4.8	11.8	27.3	4.2	M4	5	49	11	11
M-TNE25O-W	25.3	8.3	7.3	14.3	30.3	4.2	M4	16	156	35	30
M-TNE32O-W	32.3	10.3	7.3	15.8	45.3	10.7	M5	28	274	61	56
M-TNE40O-W	40.3	15.3	9.3	18.3	59.3	18.7	M6	39	382	85	117



*We test the holding force of magnetic assembly by attaching it on a 20mm thick steel sheet at room temperature and then pulling it slowly in vertical direction with the device that is sensitive enough to record the strength at the moment when magnetic assembly is separated from the steel sheet. This is to give you a reference where the actual holding force in real application could be different with the change of, for example, pulling direction, thickness of the surface etc.

Address: RM 808 BLD#4, 99 Shangwu Dadao, Huaqiao Kunshan Jiangsu 215332 China
Tel: +86 512 5035 7618 Email: sales6@weizhongmagnetics.com

NdFeB flat pot magnets with hook in different colors



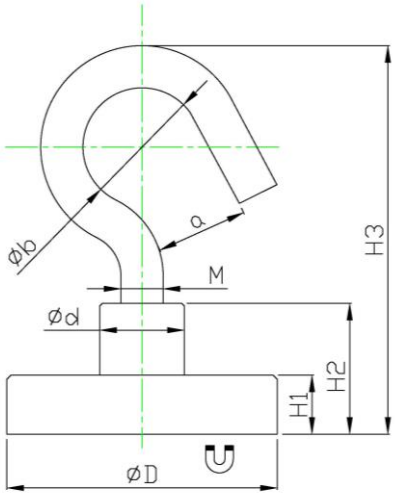

Item No.	D	d	H1	H2	H3	a	b	M	Force			Color
	mm	mm	mm	mm	mm	mm	mm		Kg	N	Lbs	
M-TNE20K-B	20.3	8.3	6.3	13.3	30.1	4.2	5.2	M4	13	127	28	Black
M-TNE20K-G	20.3	8.3	6.3	13.3	30.1	4.2	5.2	M4	13	127	28	Green
M-TNE32K-B	32.3	10.3	7.3	15.8	45.3	10.8	13.7	M5	28	274	61	Black
M-TNE32K-G	32.3	10.3	7.3	15.8	45.3	10.8	13.7	M5	28	274	61	Green



*We test the holding force of magnetic assembly by attaching it on a 20mm thick steel sheet at room temperature and then pulling it slowly in vertical direction with the device that is sensitive enough to record the strength at the moment when magnetic assembly is separated from the steel sheet. This is to give you a reference where the actual holding force in real application could be different with the change of, for example, pulling direction, thickness of the surface etc.

Address: RM 808 BLD#4, 99 Shangwu Dadao, Huaqiao Kunshan Jiangsu 215332 China
Tel: +86 512 5035 7618 Email: sales6@weizhongmagnetics.com

NdFeB deep pot magnet with hook



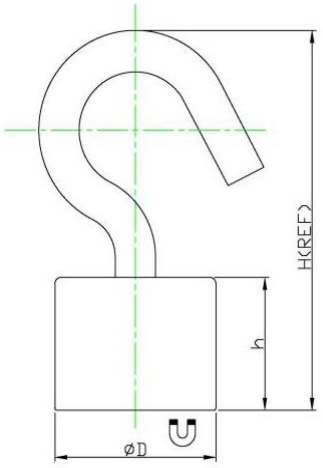

Item No	D	h	H	M	Force			Weight
	mm	mm	mm		Kg	N	Lbs	g
M-RBNE16K	16	12	30	M4	10	100	22	21
M-RBNE20K	20	16	40	M5	15	150	33	44
M-RBNE25K	25	16	40	M5	25	250	56	66



*We test the holding force of magnetic assembly by attaching it on a 20mm thick steel sheet at room temperature and then pulling it slowly in vertical direction with the device that is sensitive enough to record the strength at the moment when magnetic assembly is separated from the steel sheet. This is to give you a reference where the actual holding force in real application could be different with the change of, for example, pulling direction, thickness of the surface etc.

Address: RM 808 BLD#4, 99 Shangwu Dadao, Huaqiao Kunshan Jiangsu 215332 China
Tel: +86 512 5035 7618 Email: sales6@weizhongmagnetics.com

NdFeB pot magnet with swivel hook and rubber cap



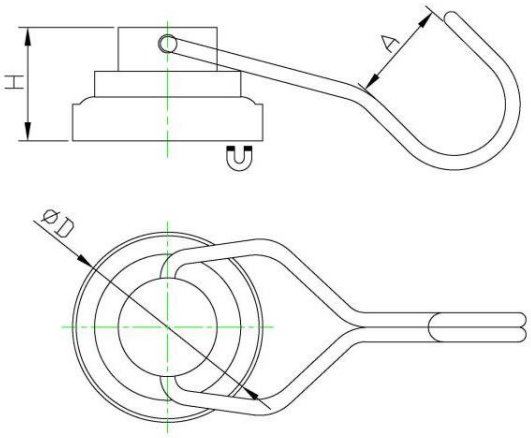

Item No.	D	H	A	Force(without rubber cap)		
	mm	mm	mm	Kg	N	Lbs
FTNT-25R	26	15.5	14mm	20	196	44
FTNT-25	25	25	14mm	20	196	44
FTNT-40	40.2	18	18mm	20	196	44

Item No ended with letter “R” means magnet with rubber cap.



*We test the holding force of magnetic assembly by attaching it on a 20mm thick steel sheet at room temperature and then pulling it slowly in vertical direction with the device that is sensitive enough to record the strength at the moment when magnetic assembly is separated from the steel sheet. This is to give you a reference where the actual holding force in real application could be different with the change of, for example, pulling direction, thickness of the surface etc.

Address: RM 808 BLD#4, 99 Shangwu Dadao, Huaqiao Kunshan Jiangsu 215332 China
Tel: +86 512 5035 7618 Email: sales6@weizhongmagnetics.com

Ferrite white powder coated magnet with swivel hook



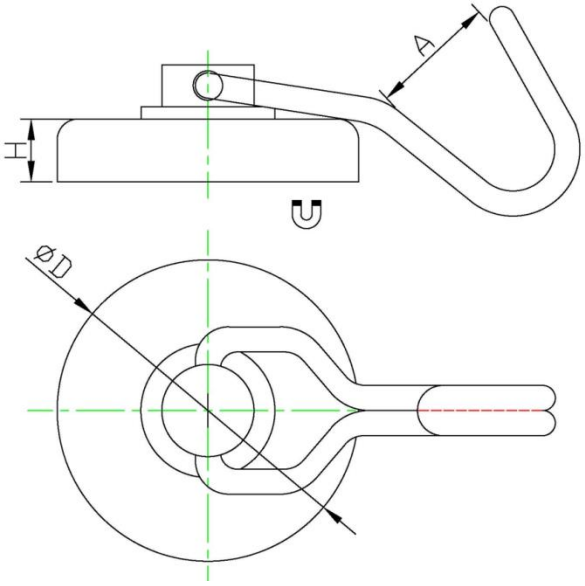

Item No.	D	H	Hook opening	Force (with protect film)		
	mm	mm	mm	Kg	N	Lbs
FTFT-36-W	36	7	15	5	49	11





*We test the holding force of magnetic assembly by attaching it on a 20mm thick steel sheet at room temperature and then pulling it slowly in vertical direction with the device that is sensitive enough to record the strength at the moment when magnetic assembly is separated from the steel sheet. This is to give you a reference where the actual holding force in real application could be different with the change of, for example, pulling direction, thickness of the surface etc.

Address: RM 808 BLD#4, 99 Shangwu Dadao, Huaqiao Kunshan Jiangsu 215332 China
Tel: +86 512 5035 7618 Email: sales6@weizhongmagnetics.com

Ferrite flat pot magnet with hook



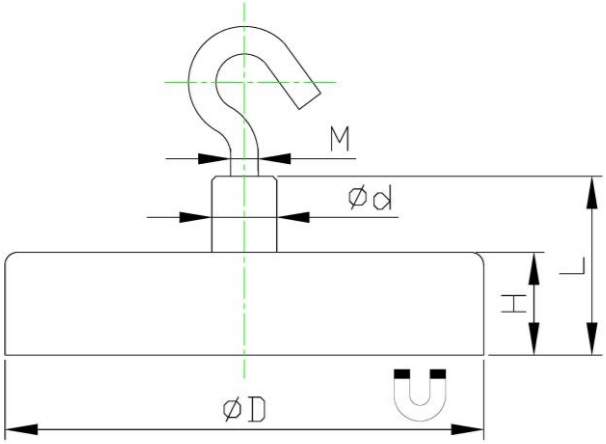

Item No.	D	H	L	d	M	Force			weight	Fixing
	mm	mm	mm	mm		Kg	N	Lbs	g	
TFE16K	16	4.5	11.5	6	M3	1.8	18	4	7	Hook
TFE20K	20	6	13	8	M4	3	30	6.7	14	Hook
TFE25K	25	7	15	8	M4	4	40	9	21	Hook
TFE32K	32	7	15	8	M4	8	80	18	33	Hook
TFE36K	36	7.7	16	8	M4	10	100	22	44	Hook
TFE40K	40	8	16.5	8	M4	12	125	28	56	Hook
TFE47K	47	9	17	8	M4	18	180	40	85	Hook
TFE50K	50	10	18.5	8	M4	22	220	49	107	Hook
TFE57K	57	10.5	18.5	8	M4	28	280	63	149	Hook
TFE63K	63	14	30	8	M4	35	350	78	214	Hook
TFE80K	80	18	28.5	12	M6	61	600	135	485	Hook eye



*We test the holding force of magnetic assembly by attaching it on a 20mm thick steel sheet at room temperature and then pulling it slowly in vertical direction with the device that is sensitive enough to record the strength at the moment when magnetic assembly is separated from the steel sheet. This is to give you a reference where the actual holding force in real application could be different with the change of, for example, pulling direction, thickness of the surface etc.

Address: RM 808 BLD#4, 99 Shangwu Dadao, Huaqiao Kunshan Jiangsu 215332 China
Tel: +86 512 5035 7618 Email: sales6@weizhongmagnetics.com

Ferrite flat pot magnet with hook, white powder coated



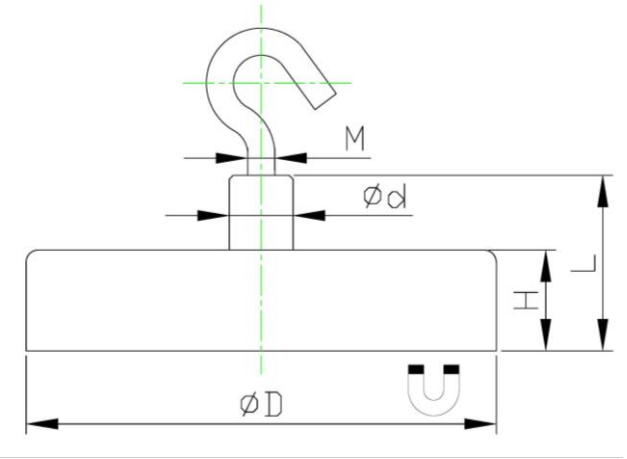

Item No.	D	H	L	d	M	Force			weight	Fixing
	mm	mm	mm	mm		Kg	N	Lbs	g	
TFE16K-W	16	4.5	11.5	6	M3	1	10	2	7	Hook
TFE20K-W	20	6	13	8	M4	3	30	6.7	14	Hook
TFE25K-W	25	7	15	8	M4	4	40	9	21	Hook
TFE32K-W	32	7	15	8	M4	8	80	18	33	Hook
TFE36K-W	36	7.7	16	8	M4	10	100	22	44	Hook
TFE40K-W	40	8	16.5	8	M4	12	125	28	56	Hook
TFE47K-W	47	9	17	8	M4	18	180	40	85	Hook
TFE50K-W	50	10	18.5	8	M4	22	220	49	107	Hook
TFE57K-W	57	10.5	18.5	8	M4	28	280	63	149	Hook
TFE63K-W	63	14	30	8	M4	35	350	78	214	Hook
TFE80K-W	80	18	28.5	12	M6	61	600	135	485	Hook eye





*We test the holding force of magnetic assembly by attaching it on a 20mm thick steel sheet at room temperature and then pulling it slowly in vertical direction with the device that is sensitive enough to record the strength at the moment when magnetic assembly is separated from the steel sheet. This is to give you a reference where the actual holding force in real application could be different with the change of, for example, pulling direction, thickness of the surface etc.

Address: RM 808 BLD#4, 99 Shangwu Dadao, Huaqiao Kunshan Jiangsu 215332 China
Tel: +86 512 5035 7618 Email: sales6@weizhongmagnetics.com

Ferrite flat pot magnet with hook, powder coated



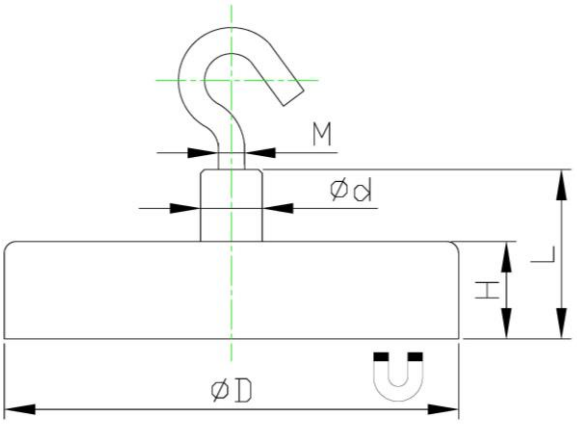

Item No.	D	H	L	d	M	Force			weight	Color
	mm	mm	mm	mm		Kg	N	Lbs	g	
TFE32K-B	32	7	15	8	M4	8	80	18	33	Black
TFE32K-W	32	7	15	8	M4	8	80	18	33	White
TFE32K-R	32	7	15	8	M4	8	80	18	33	Red
TFE32K-Y	32	7	15	8	M4	8	80	18	33	Yellow
TFE32K-G	32	7	15	8	M4	8	80	18	33	Green
TFE32K-BL	32	7	15	8	M4	8	80	18	33	Blue



*We test the holding force of magnetic assembly by attaching it on a 20mm thick steel sheet at room temperature and then pulling it slowly in vertical direction with the device that is sensitive enough to record the strength at the moment when magnetic assembly is separated from the steel sheet. This is to give you a reference where the actual holding force in real application could be different with the change of, for example, pulling direction, thickness of the surface etc.

Address: RM 808 BLD#4, 99 Shangwu Dadao, Huaqiao Kunshan Jiangsu 215332 China
Tel: +86 512 5035 7618 Email: sales6@weizhongmagnetics.com

Ferrite channel magnet with hook, white powder coated 1"

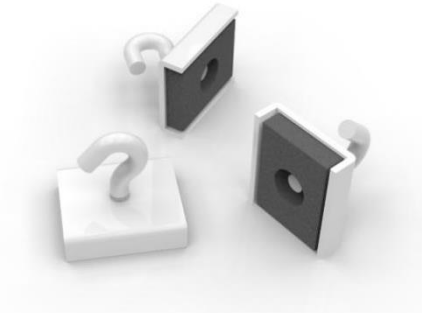

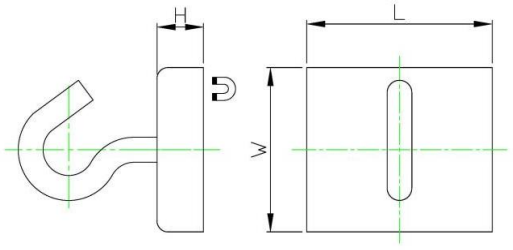

Item No.	L	W	H	Force		
	mm	mm	mm	Kg	N	Lbs
CHFL1K-W	25.4	22.7	6.7	4	39	9

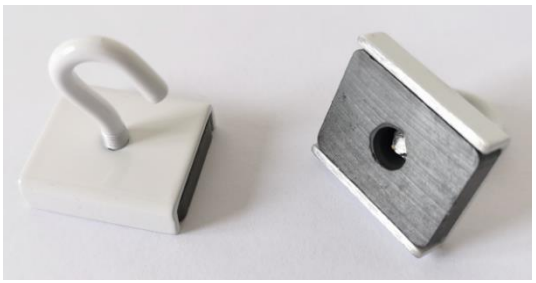

NdFeB channel magnet with hook, white powder coated 1"

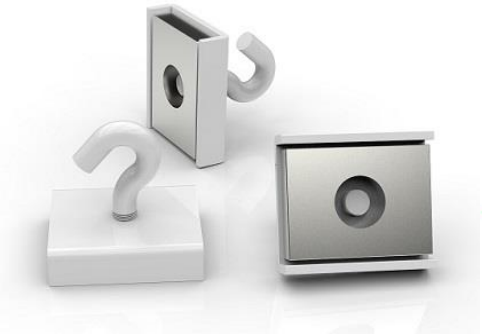

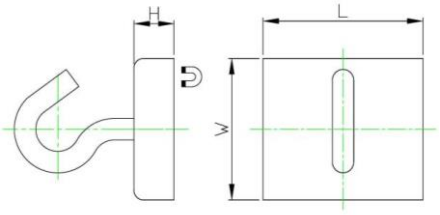

Item No.	L	W	H	Force		
	mm	mm	mm	Kg	N	Lbs
CHNL1K-W	25.4	22.7	6.35	10	98	22



*We test the holding force of magnetic assembly by attaching it on a 20mm thick steel sheet at room temperature and then pulling it slowly in vertical direction with the device that is sensitive enough to record the strength at the moment when magnetic assembly is separated from the steel sheet. This is to give you a reference where the actual holding force in real application could be different with the change of, for example, pulling direction, thickness of the surface etc.

Address: RM 808 BLD#4, 99 Shangwu Dadao, Huaqiao Kunshan Jiangsu 215332 China
Tel: +86 512 5035 7618 Email: sales6@weizhongmagnetics.com

Plastic cased magnet with hook



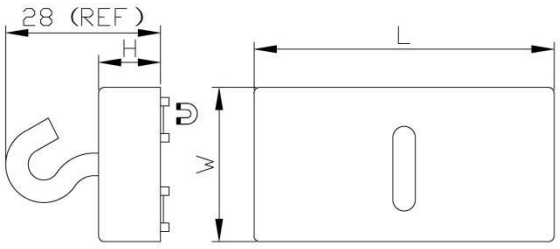

Item No.	L	W	H	Force			weight
	mm	mm	mm	Kg	N	Lbs	g
PCFL53K-W	53	27.5	11	15	147	33	53



Plastic cased magnet with eyelet



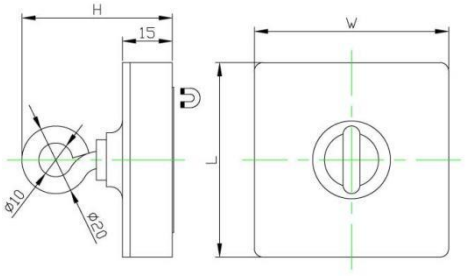

Item No.	L	W	H	Force			weight
	mm	mm	mm	Kg	N	Lbs	g
PCFL58O	58	58	44	30	294	66	130



*We test the holding force of magnetic assembly by attaching it on a 20mm thick steel sheet at room temperature and then pulling it slowly in vertical direction with the device that is sensitive enough to record the strength at the moment when magnetic assembly is separated from the steel sheet. This is to give you a reference where the actual holding force in real application could be different with the change of, for example, pulling direction, thickness of the surface etc.

Address: RM 808 BLD#4, 99 Shangwu Dadao, Huaqiao Kunshan Jiangsu 215332 China
Tel: +86 512 5035 7618 Email: sales6@weizhongmagnetics.com

Plastic cased magnetic ceiling hook

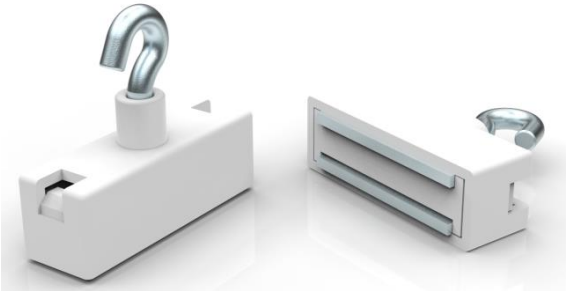

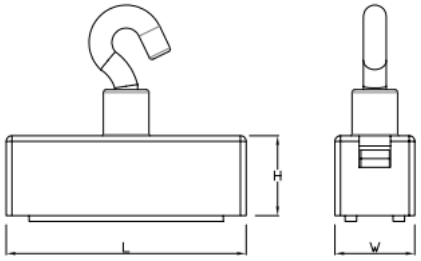

Item No.	L	W	H	Force		
	mm	mm	mm	Kg	N	Lbs
PCFL42K-W	42	14	14	5.6	55	33





NdFeB memo magnet with notch



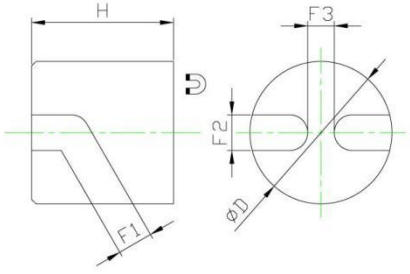

Item No.	D	H	F1	F2	F3	Force			weight
	mm	mm	mm	mm	mm	Kg	N	Lbs	g
RDNE16S	16	16	4	4	3	4	40	9	20



*We test the holding force of magnetic assembly by attaching it on a 20mm thick steel sheet at room temperature and then pulling it slowly in vertical direction with the device that is sensitive enough to record the strength at the moment when magnetic assembly is separated from the steel sheet. This is to give you a reference where the actual holding force in real application could be different with the change of, for example, pulling direction, thickness of the surface etc.

Address: RM 808 BLD#4, 99 Shangwu Dadao, Huaqiao Kunshan Jiangsu 215332 China
Tel: +86 512 5035 7618 Email: sales6@weizhongmagnetics.com

Customized magnetic hooks









*We test the holding force of magnetic assembly by attaching it on a 20mm thick steel sheet at room temperature and then pulling it slowly in vertical direction with the device that is sensitive enough to record the strength at the moment when magnetic assembly is separated from the steel sheet. This is to give you a reference where the actual holding force in real application could be different with the change of, for example, pulling direction, thickness of the surface etc.

Address: RM 808 BLD#4, 99 Shangwu Dadao, Huaqiao Kunshan Jiangsu 215332 China
Tel: +86 512 5035 7618 Email: sales6@weizhongmagnetics.com

04 Deep Pot Magnet

Different from other pot magnets at the first look, these deep pot magnets are actually designed, produced using the same principle.

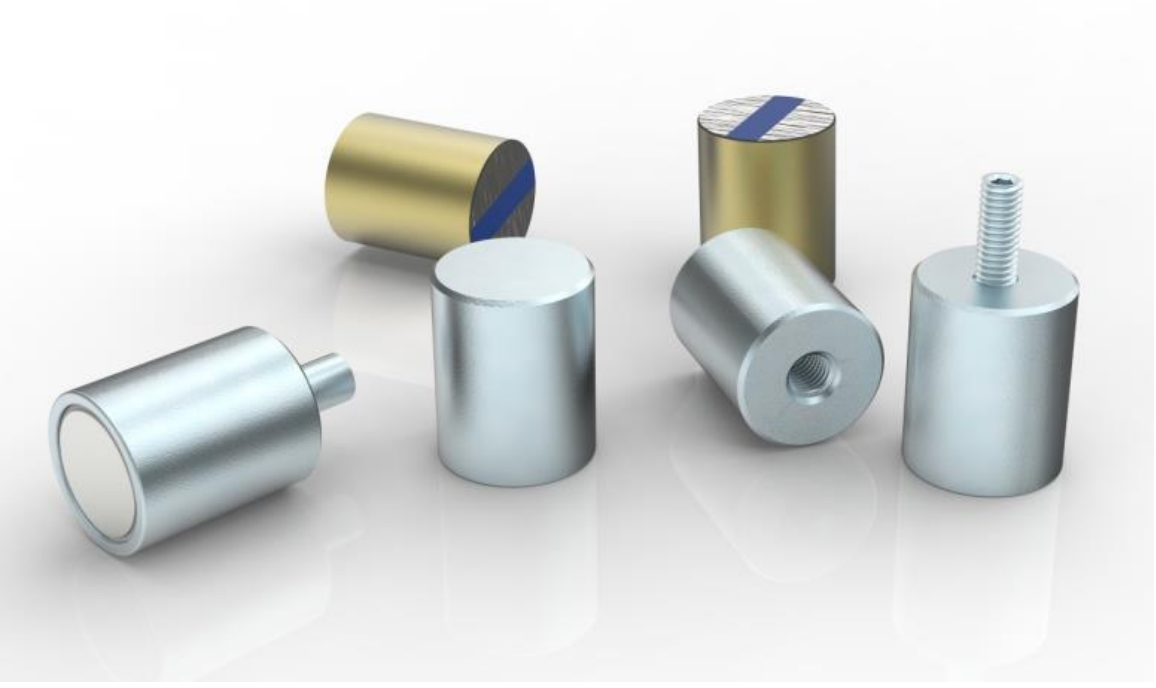

PRODUCT INFORMATION

1) Steel or brass housing.
2) Custom request on design, strength and coating etc is workable.

Address: RM 808 BLD#4, 99 Shangwu Dadao, Huaqiao Kunshan Jiangsu 215332 China
Tel: +86 512 5035 7618 Email: sales6@weizhongmagnetics.com

NdFeB deep pot magnet with screw hole



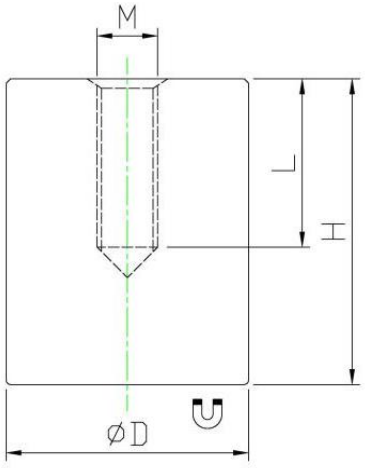

Item No.	D	H	MXL	Force			Weight
	mm	mm	mm	Kg	N	Lbs	g
M-RDNE6F	6	20	M3x5	0.6	6	1.3	4
M-RDNE8F	8	20	M3x5	1.2	12	2.6	7.5
M-RDNE10F	10	20	M4x7	2.4	24	5.3	11
M-RDNE13F	13	20	M4x7	6	60	13	20
M-RDNE16F	16	20	M4x7	9	90	20	30
M-RDNE20F	20	25	M6x9	13	135	30	58
M-RDNE25F	25	35	M6x9	19	190	42	131
M-RDNE32F	32	40	M8x12	34	340	76	243
M-RDNE40F	40	50	M8x12	71	700	157	480
M-RDNE50F	50	60	M10x12	102	1000	225	900
M-RDNE63F	63	65	M12x14	173	1700	382	1560

*H can be shortened or machined without being damaged.



*We test the holding force of magnetic assembly by attaching it on a 20mm thick steel sheet at room temperature and then pulling it slowly in vertical direction with the device that is sensitive enough to record the strength at the moment when magnetic assembly is separated from the steel sheet. This is to give you a reference where the actual holding force in real application could be different with the change of, for example, pulling direction, thickness of the surface etc.

Address: RM 808 BLD#4, 99 Shangwu Dadao, Huaqiao Kunshan Jiangsu 215332 China
Tel: +86 512 5035 7618 Email: sales6@weizhongmagnetics.com

NdFeB deep pot magnet with threaded stud



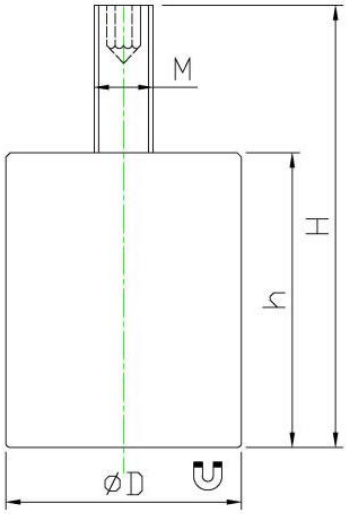

Item No.	D	H	h	M	Force			Weight
	mm	mm	mm		Kg	N	Lbs	g
M-RDNE16M	16	30	20	M4	9	90	20	30
M-RDNE20M	20	35	25	M6	13	135	30	58
M-RDNE25M	25	45	35	M6	19	190	42	131
M-RDNE32M	32	52	40	M8	34	340	76	243
M-RDNE40M	40	65	50	M8	71	700	157	490
M-RDNE50M	50	75	60	M10	102	1000	225	915
M-RDNE63M	63	85	65	M12	173	1700	382	1579

*H can be shortened or machined without being damaged.



*We test the holding force of magnetic assembly by attaching it on a 20mm thick steel sheet at room temperature and then pulling it slowly in vertical direction with the device that is sensitive enough to record the strength at the moment when magnetic assembly is separated from the steel sheet. This is to give you a reference where the actual holding force in real application could be different with the change of, for example, pulling direction, thickness of the surface etc.

Address: RM 808 BLD#4, 99 Shangwu Dadao, Huaqiao Kunshan Jiangsu 215332 China
Tel: +86 512 5035 7618 Email: sales6@weizhongmagnetics.com

NdFeB deep pot magnet flat



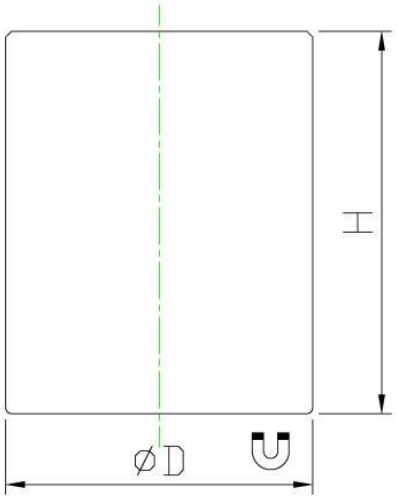

Item No.	D	H	Force			Weight
	mm	mm	Kg	N	Lbs	g
M-RDNE10	10	20	2.4	24	5.3	12
M-RDNE16	16	20	9	90	20	31
M-RDNE20	20	25	13	135	30	61
M-RDNE25	25	35	19	190	42	133

*H can be shortened or machined without being damaged.



*We test the holding force of magnetic assembly by attaching it on a 20mm thick steel sheet at room temperature and then pulling it slowly in vertical direction with the device that is sensitive enough to record the strength at the moment when magnetic assembly is separated from the steel sheet. This is to give you a reference where the actual holding force in real application could be different with the change of, for example, pulling direction, thickness of the surface etc.

Address: RM 808 BLD#4, 99 Shangwu Dadao, Huaqiao Kunshan Jiangsu 215332 China
Tel: +86 512 5035 7618 Email: sales6@weizhongmagnetics.com

NdFeB deep pot magnet with threaded neck



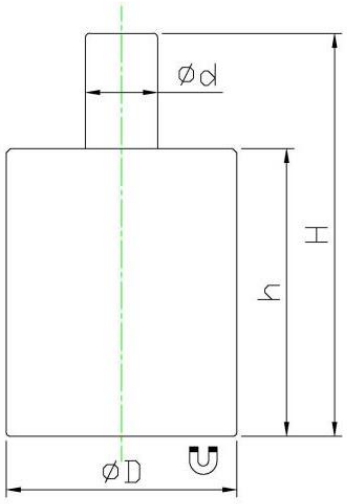

Item No.	D	d	H	h	Force			Weight
	mm	mm	mm	mm	Kg	N	Lbs	g
M-RDNE10P	10	4	28	20	2.4	24	5.3	13
M-RDNE16P	16	5	28	20	9	90	20	31
M-RDNE20P	20	6	33	25	13	135	30	61
M-RDNE25P	25	8	45	35	19	190	42	133

*H can be shortened or machined without being damaged.



*We test the holding force of magnetic assembly by attaching it on a 20mm thick steel sheet at room temperature and then pulling it slowly in vertical direction with the device that is sensitive enough to record the strength at the moment when magnetic assembly is separated from the steel sheet. This is to give you a reference where the actual holding force in real application could be different with the change of, for example, pulling direction, thickness of the surface etc.

Address: RM 808 BLD#4, 99 Shangwu Dadao, Huaqiao Kunshan Jiangsu 215332 China
Tel: +86 512 5035 7618 Email: sales6@weizhongmagnetics.com

NdFeB deep pot magnet with brass body, blue epoxy

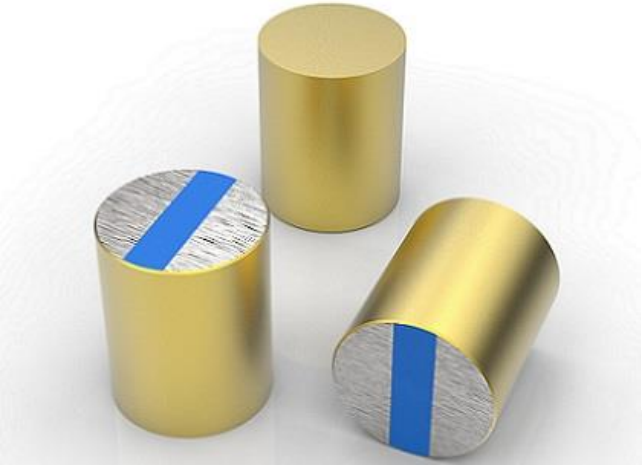

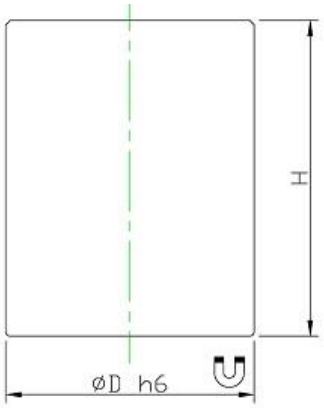

Item No.	D	H	Force			Weight
	mm	mm	Kg	N	Lbs	g
M-RDNW6	6	20	1	10	2.2	4.5
M-RDNW8	8	20	2.5	25	5.6	8
M-RDNW10	10	20	4.5	45	10	12
M-RDNW13	13	20	7	70	15	20
M-RDNW16	16	20	15	150	33	30
M-RDNW20	20	25	28	280	63	59
M-RDNW25	25	35	46	450	101	132
M-RDNW32	32	40	71	700	157	246



*We test the holding force of magnetic assembly by attaching it on a 20mm thick steel sheet at room temperature and then pulling it slowly in vertical direction with the device that is sensitive enough to record the strength at the moment when magnetic assembly is separated from the steel sheet. This is to give you a reference where the actual holding force in real application could be different with the change of, for example, pulling direction, thickness of the surface etc.

Address: RM 808 BLD#4, 99 Shangwu Dadao, Huaqiao Kunshan Jiangsu 215332 China
Tel: +86 512 5035 7618 Email: sales6@weizhongmagnetics.com

05 Channel Magnet

Channel magnet gets its name exactly from its structure.

It shares the same working principle with round shape pot magnet that conduct magnetic field strength via the steel channel to have alternating-pole pattern on the holding face so that high holding force can be obtained.

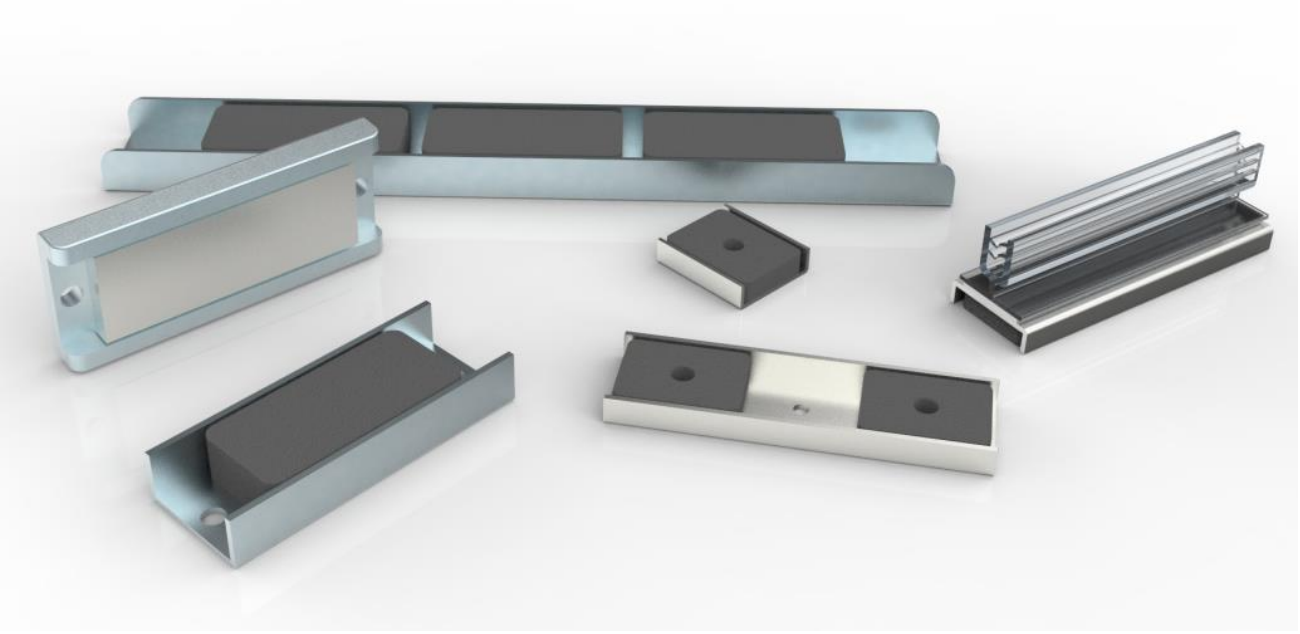

PRODUCT INFORMATION

1) Channel magnet with mounting hole, PVC gripper, hook or key ring etc for different applications can be provided.
2) Standard coating is Nickel and Zinc, special coating like power coated or rubber coated etc can be offered upon request.
3) Two types of magnets: neodymium, ferrite, to have various force & length combinations

Address: RM 808 BLD#4, 99 Shangwu Dadao, Huaqiao Kunshan Jiangsu 215332 China
Tel: +86 512 5035 7618 Email: sales6@weizhongmagnetics.com

Ferrite channel magnet with mounting hole 1"



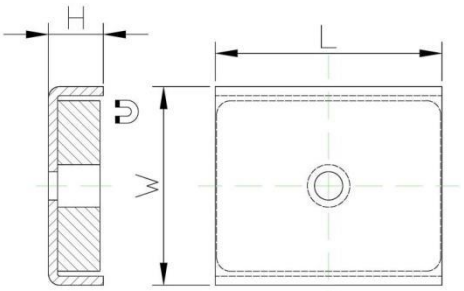

Item No.	L	W	H	Force			Weight
	mm	mm	mm	Kg	N	Lbs	g
CHFL1B	25.4	22.23	6.35	4	39	9	16.7



NdFeB channel magnet with mounting hole 1"



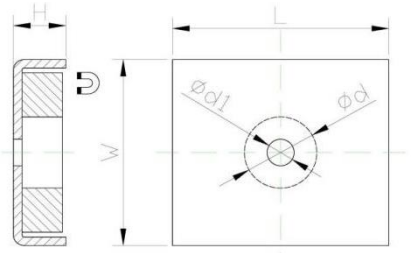

Item No.	L	W	H	d	d1	Force		
	mm	mm	mm	mm	mm	Kg	N	Lbs
CHNL1B	25.4	22.35	6.35	8.5	3.2	15	147	35

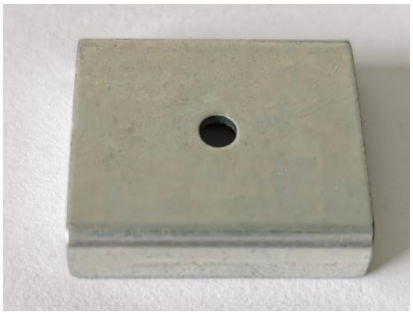



*We test the holding force of magnetic assembly by attaching it on a 20mm thick steel sheet at room temperature and then pulling it slowly in vertical direction with the device that is sensitive enough to record the strength at the moment when magnetic assembly is separated from the steel sheet. This is to give you a reference where the actual holding force in real application could be different with the change of, for example, pulling direction, thickness of the surface etc.

Address: RM 808 BLD#4, 99 Shangwu Dadao, Huaqiao Kunshan Jiangsu 215332 China
Tel: +86 512 5035 7618 Email: sales6@weizhongmagnetics.com

Channel magnet with loop



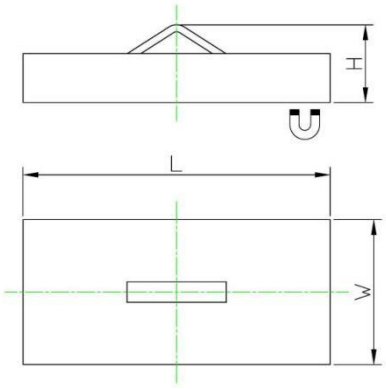

Item No.	L	W	H	Force		
	mm	mm	mm	Kg	N	Lbs
CHFL1V	25.4	22.22	10.8	2	22	5
CHFL2V	50.8	24	12.85	6	62	14



Ferrite channel magnet with mounting holes 2.7"



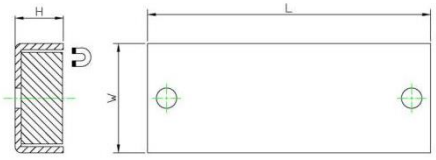

Item No.	L	W	H	Force			Weight
	mm	mm	mm	Kg	N	Lbs	g
CHFL2.7B	68.58	26.42	11.63	11	108	24	85



*We test the holding force of magnetic assembly by attaching it on a 20mm thick steel sheet at room temperature and then pulling it slowly in vertical direction with the device that is sensitive enough to record the strength at the moment when magnetic assembly is separated from the steel sheet. This is to give you a reference where the actual holding force in real application could be different with the change of, for example, pulling direction, thickness of the surface etc.

Address: RM 808 BLD#4, 99 Shangwu Dadao, Huaqiao Kunshan Jiangsu 215332 China
Tel: +86 512 5035 7618 Email: sales6@weizhongmagnetics.com

Ferrite channel magnet with mounting holes 3"

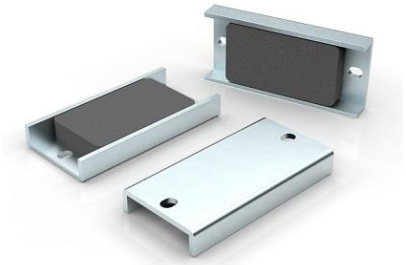

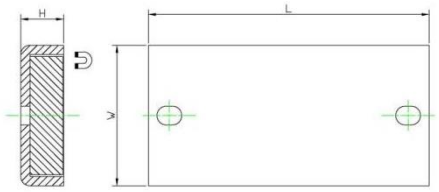

Item No.	L	W	H	Force			Weight
	mm	mm	mm	Kg	N	Lbs	g
CHFL3B	76.2	38.1	11.61	27	264	59	148

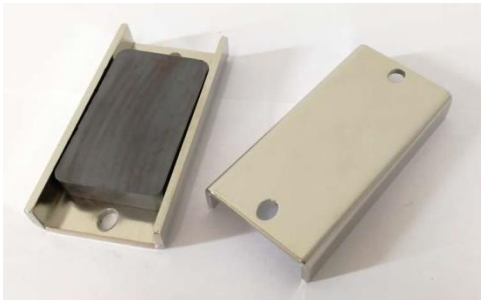

NdFeB channel magnet with mounting holes 3"



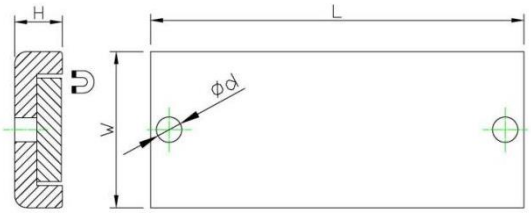

Item No.	L	W	H	d	Force			weight
	mm	mm	mm	mm	Kg	N	Lbs	g
CHNL3B	76.2	31.75	9.7	5.16	45	441	99	150



*We test the holding force of magnetic assembly by attaching it on a 20mm thick steel sheet at room temperature and then pulling it slowly in vertical direction with the device that is sensitive enough to record the strength at the moment when magnetic assembly is separated from the steel sheet. This is to give you a reference where the actual holding force in real application could be different with the change of, for example, pulling direction, thickness of the surface etc.

Address: RM 808 BLD#4, 99 Shangwu Dadao, Huaqiao Kunshan Jiangsu 215332 China
Tel: +86 512 5035 7618 Email: sales6@weizhongmagnetics.com

Ferrite channel magnet flat 3''

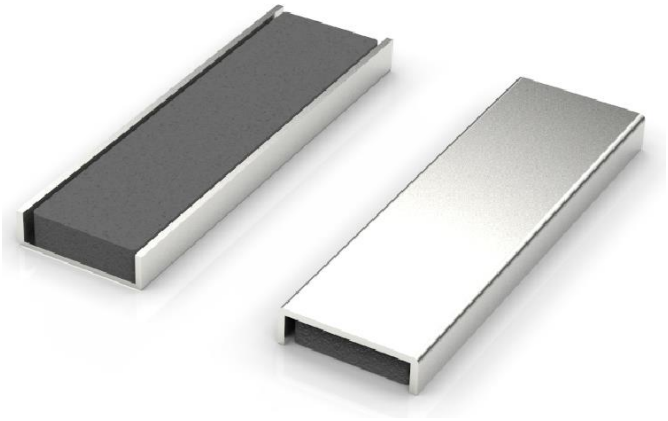

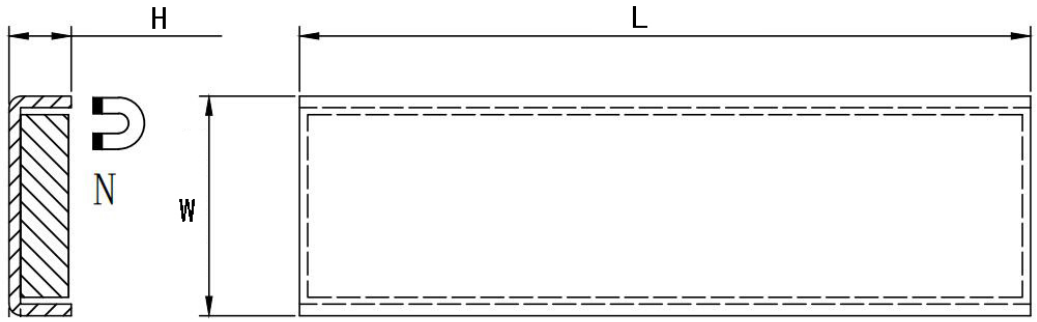

Item No.	L	W	H	Force		
	mm	mm	mm	Kg	N	Lbs
CHFL3	76.2	22.86	6.48	10	98	22



*We test the holding force of magnetic assembly by attaching it on a 20mm thick steel sheet at room temperature and then pulling it slowly in vertical direction with the device that is sensitive enough to record the strength at the moment when magnetic assembly is separated from the steel sheet. This is to give you a reference where the actual holding force in real application could be different with the change of, for example, pulling direction, thickness of the surface etc.

Address: RM 808 BLD#4, 99 Shangwu Dadao, Huaqiao Kunshan Jiangsu 215332 China
Tel: +86 512 5035 7618 Email: sales6@weizhongmagnetics.com

Ferrite channel magnet with threaded bush 3"

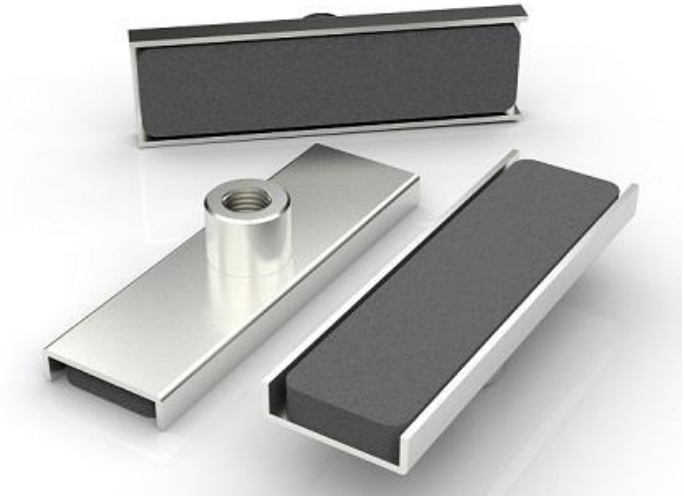

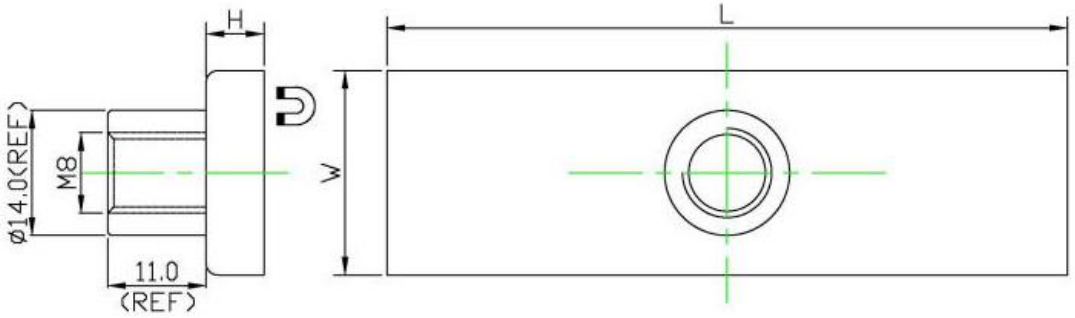

Item No.	L	W	H	Force		
	mm	mm	mm	Kg	N	Lbs
CHFL3F	76.2	22.86	6.48	10	98	22



*We test the holding force of magnetic assembly by attaching it on a 20mm thick steel sheet at room temperature and then pulling it slowly in vertical direction with the device that is sensitive enough to record the strength at the moment when magnetic assembly is separated from the steel sheet. This is to give you a reference where the actual holding force in real application could be different with the change of, for example, pulling direction, thickness of the surface etc.

Address: RM 808 BLD#4, 99 Shangwu Dadao, Huaqiao Kunshan Jiangsu 215332 China
Tel: +86 512 5035 7618 Email: sales6@weizhongmagnetics.com

Ferrite channel magnet with mounting holes 8"

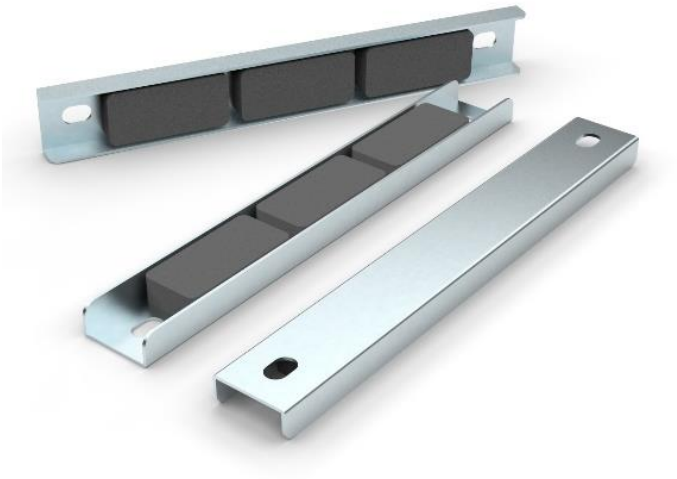

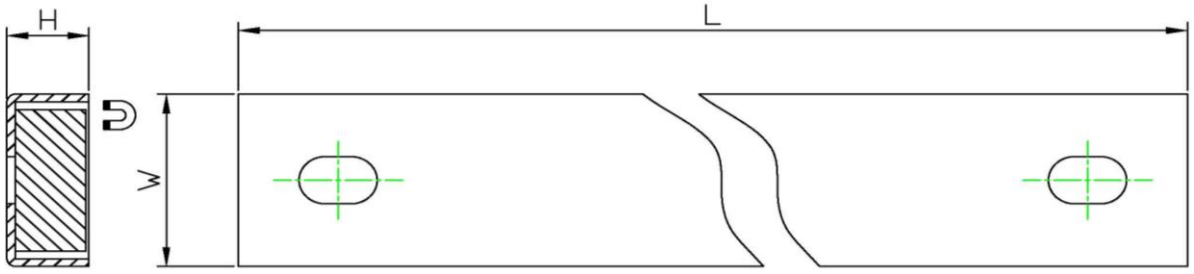

Item No.	L	W	H	Force			Weight
	mm	mm	mm	Kg	N	Lbs	g
CHFL8B	203.2	26.64	11.5	27	264	59	234



*We test the holding force of magnetic assembly by attaching it on a 20mm thick steel sheet at room temperature and then pulling it slowly in vertical direction with the device that is sensitive enough to record the strength at the moment when magnetic assembly is separated from the steel sheet. This is to give you a reference where the actual holding force in real application could be different with the change of, for example, pulling direction, thickness of the surface etc.

Address: RM 808 BLD#4, 99 Shangwu Dadao, Huaqiao Kunshan Jiangsu 215332 China
Tel: +86 512 5035 7618 Email: sales6@weizhongmagnetics.com

Ferrite channel magnet with cloth tape protection 8''



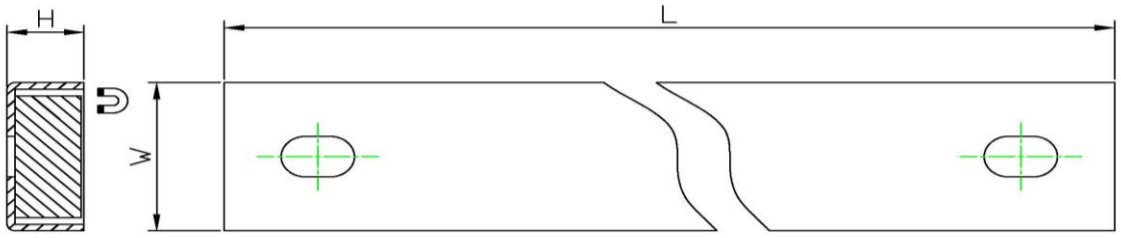

Item No.	L	W	H	Force		
	mm	mm	mm	Kg	N	Lbs
CHFL8B-CLOTH	203.2	27.8	11.8	6	59	13



*We test the holding force of magnetic assembly by attaching it on a 20mm thick steel sheet at room temperature and then pulling it slowly in vertical direction with the device that is sensitive enough to record the strength at the moment when magnetic assembly is separated from the steel sheet. This is to give you a reference where the actual holding force in real application could be different with the change of, for example, pulling direction, thickness of the surface etc.

Address: RM 808 BLD#4, 99 Shangwu Dadao, Huaqiao Kunshan Jiangsu 215332 China
Tel: +86 512 5035 7618 Email: sales6@weizhongmagnetics.com

Ferrite channel magnet with blue injection molded protection 8''

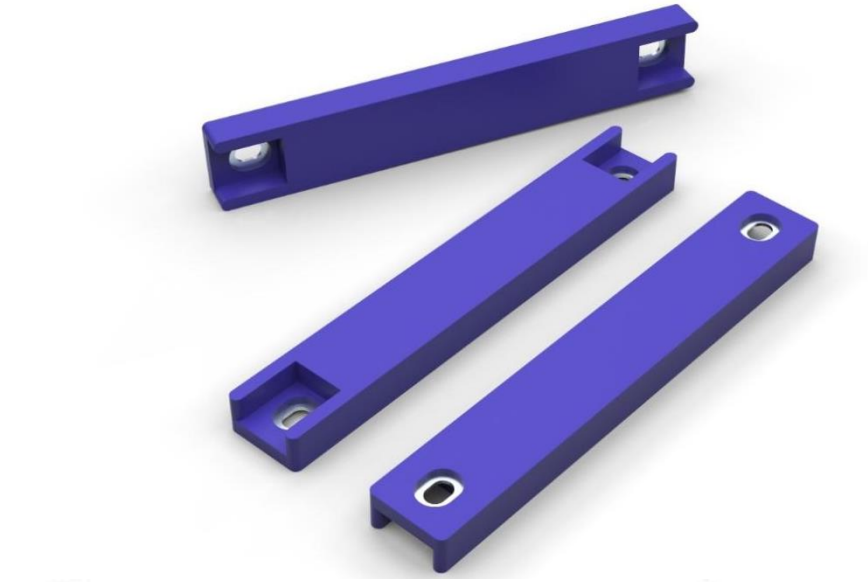

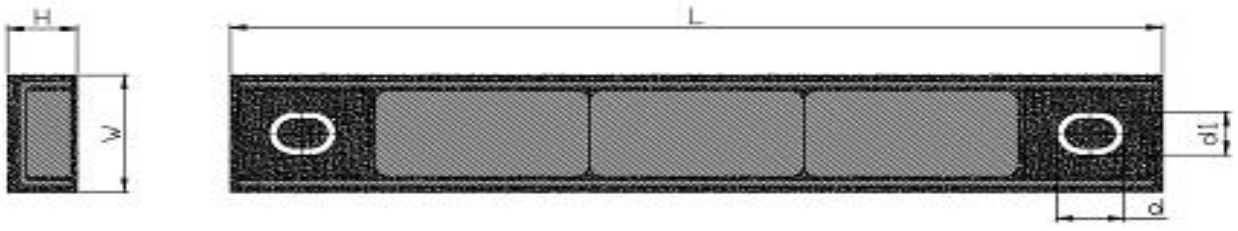

Item No.	L	W	H	Force		
	mm	mm	mm	Kg	N	Lbs
CHFL8B-TPR	207	30	15.5	6	59	13

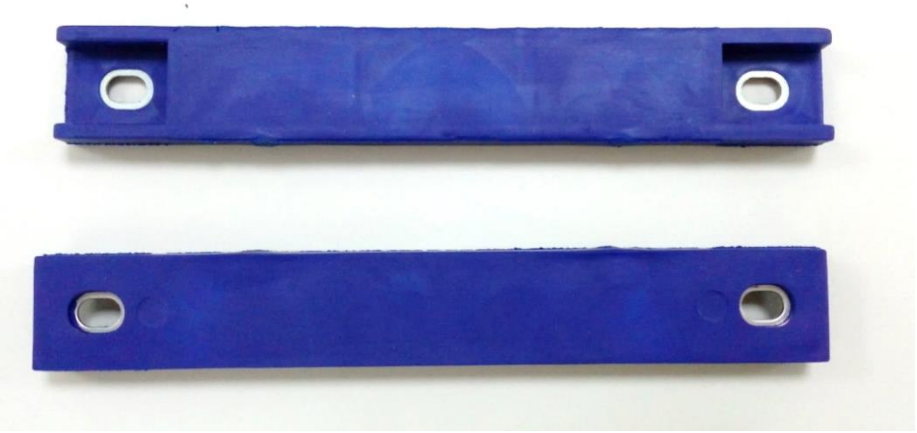

*We test the holding force of magnetic assembly by attaching it on a 20mm thick steel sheet at room temperature and then pulling it slowly in vertical direction with the device that is sensitive enough to record the strength at the moment when magnetic assembly is separated from the steel sheet. This is to give you a reference where the actual holding force in real application could be different with the change of, for example, pulling direction, thickness of the surface etc.

Address: RM 808 BLD#4, 99 Shangwu Dadao, Huaqiao Kunshan Jiangsu 215332 China
Tel: +86 512 5035 7618 Email: sales6@weizhongmagnetics.com

Ferrite channel magnet with mounting holes 12"

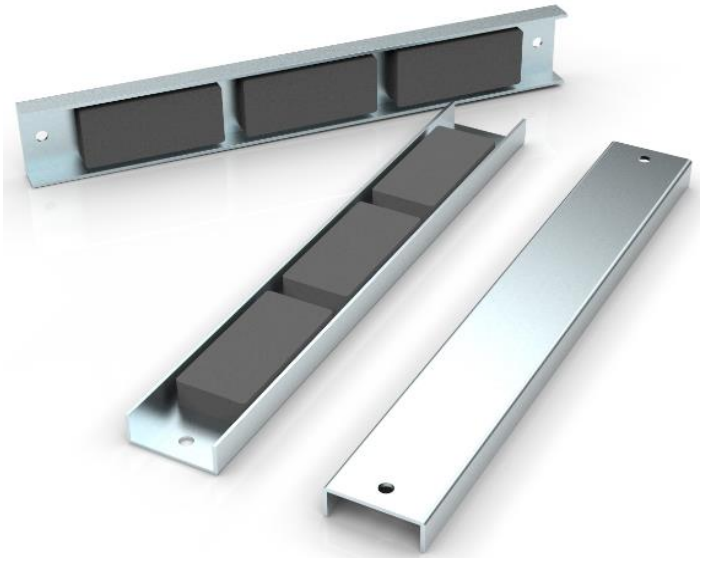

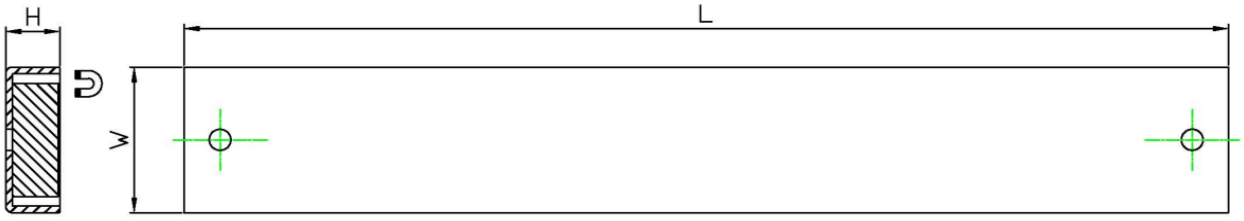

Item No.	L	W	H	Force			Weight
	mm	mm	mm	Kg	N	Lbs	g
CHFL12B	304.8	43.69	15.75	68	666	149	789.5





*We test the holding force of magnetic assembly by attaching it on a 20mm thick steel sheet at room temperature and then pulling it slowly in vertical direction with the device that is sensitive enough to record the strength at the moment when magnetic assembly is separated from the steel sheet. This is to give you a reference where the actual holding force in real application could be different with the change of, for example, pulling direction, thickness of the surface etc.

Address: RM 808 BLD#4, 99 Shangwu Dadao, Huaqiao Kunshan Jiangsu 215332 China
Tel: +86 512 5035 7618 Email: sales6@weizhongmagnetics.com

Ferrite channel magnet with mounting holes 24"

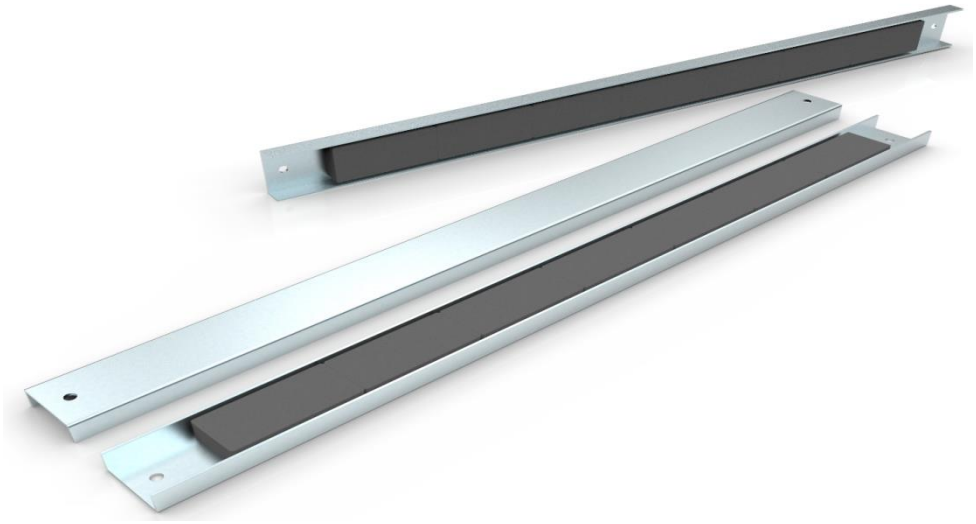

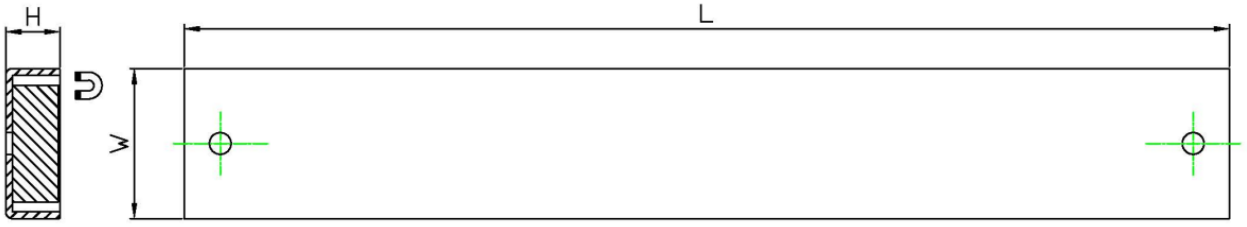

Item No.	L	W	H	Force			Weight
	mm	mm	mm	Kg	N	Lbs	g
CHFL24B	609.6	43.69	15.75	50	490	110	1764



*We test the holding force of magnetic assembly by attaching it on a 20mm thick steel sheet at room temperature and then pulling it slowly in vertical direction with the device that is sensitive enough to record the strength at the moment when magnetic assembly is separated from the steel sheet. This is to give you a reference where the actual holding force in real application could be different with the change of, for example, pulling direction, thickness of the surface etc.

Address: RM 808 BLD#4, 99 Shangwu Dadao, Huaqiao Kunshan Jiangsu 215332 China
Tel: +86 512 5035 7618 Email: sales6@weizhongmagnetics.com

06 Shuttering Magnet

Shuttering magnet refers to magnetic parts for precast concrete industry.

They are mainly used for fixing and fastening, with which the traditional way is to use fasteners, pins and usually needs a long-time labor-consuming preparation work. Using magnetic parts, which produce strong holding force as a result of the magnet inside and optimized magnetic circuit design, saves huge amount of time.



PRODUCT INFORMATION

1) Large range of magnets for precast from small magnetic nailing plate, magnetic ferrule to large magnetic shuttering and profile systems are available.
2) Custom request on design, strength and coating etc. can be provided.
3) Easy operation and great reliability.

Address: RM 808 BLD#4, 99 Shangwu Dadao, Huaqiao Kunshan Jiangsu 215332 China
Tel: +86 512 5035 7618 Email: sales6@weizhongmagnetics.com

Shuttering magnet



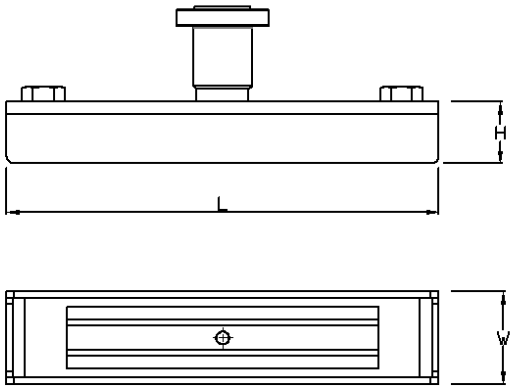

Item No.	L	W	H	Force			weight
	mm	mm	mm	Kg	N	Lbs	KG
SM-450	170	60	40	450	4410	991	2.7
SM-900	280	60	40	900	8820	1982	4.5
SM-1500	320	120	60	1500	14700	3304	8
SM-1800	320	120	60	1800	17640	3965	9
SM-2100	320	120	60	2100	20580	4625	10











*We test the holding force of magnetic assembly by attaching it on a 20mm thick steel sheet at room temperature and then pulling it slowly in vertical direction with the device that is sensitive enough to record the strength at the moment when magnetic assembly is separated from the steel sheet. This is to give you a reference where the actual holding force in real application could be different with the change of, for example, pulling direction, thickness of the surface etc.

Address: RM 808 BLD#4, 99 Shangwu Dadao, Huaqiao Kunshan Jiangsu 215332 China
Tel: +86 512 5035 7618 Email: sales6@weizhongmagnetics.com

Shuttering magnet with back plate



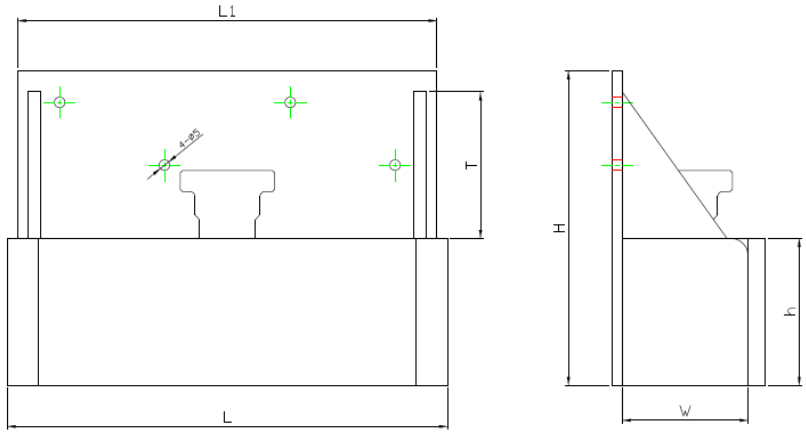

Item No.	L	L1	T	H	h	W	Force			Weight
	mm	mm	mm	mm	mm	mm	Kg	N	Lbs	KG
SM-900-H	210	200	70	150	70	50	900	8820	1982	5.1



*We test the holding force of magnetic assembly by attaching it on a 20mm thick steel sheet at room temperature and then pulling it slowly in vertical direction with the device that is sensitive enough to record the strength at the moment when magnetic assembly is separated from the steel sheet. This is to give you a reference where the actual holding force in real application could be different with the change of, for example, pulling direction, thickness of the surface etc.

Address: RM 808 BLD#4, 99 Shangwu Dadao, Huaqiao Kunshan Jiangsu 215332 China
Tel: +86 512 5035 7618 Email: sales6@weizhongmagnetics.com

Magnet plate



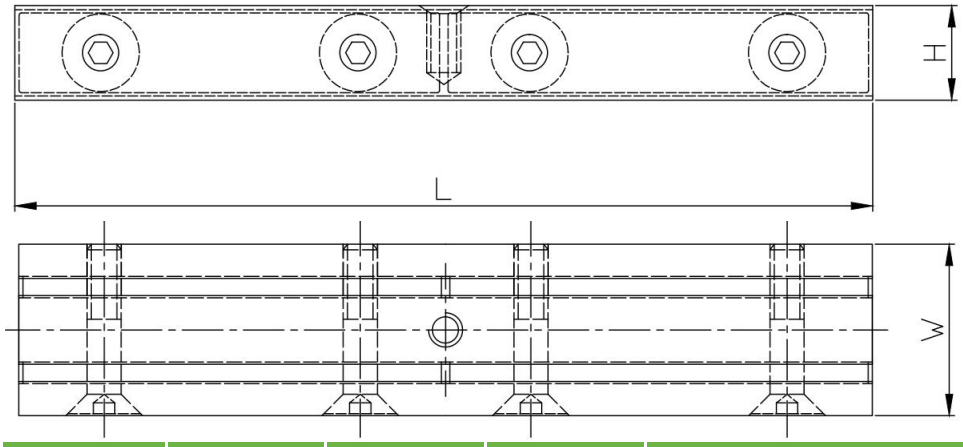

Item No.	L	W	H	Force		
	mm	mm	mm	Kg	N	Lbs
SWNL100F	100	40	22	450	4410	991
SWNL200F-1	200	40	22	900	8820	1982
SWNL200F-2	200	90	22	1500	14700	3304
SWNL240F-1	240	90	22	1800	17640	3965
SWNL240F-2	240	90	22	2100	20580	4625





*We test the holding force of magnetic assembly by attaching it on a 20mm thick steel sheet at room temperature and then pulling it slowly in vertical direction with the device that is sensitive enough to record the strength at the moment when magnetic assembly is separated from the steel sheet. This is to give you a reference where the actual holding force in real application could be different with the change of, for example, pulling direction, thickness of the surface etc.

Address: RM 808 BLD#4, 99 Shangwu Dadao, Huaqiao Kunshan Jiangsu 215332 China
Tel: +86 512 5035 7618 Email: sales6@weizhongmagnetics.com

U profile shutter magnet



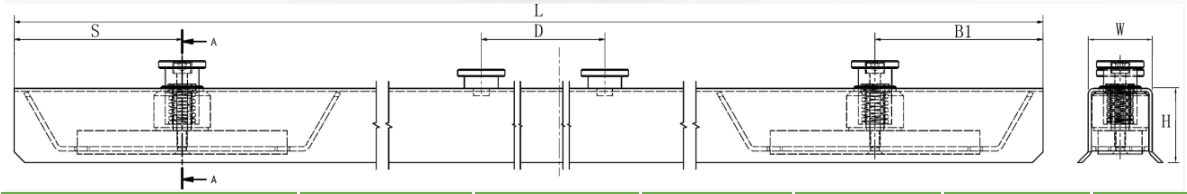

Item No.	L	W	H	S	D	B1
	mm	mm	mm	mm	mm	mm
SM-70/840	840	61	70	160	320	160
SM-70/1000	1000	61	70	160	320	160
SM-70/1200	1200	61	70	160	320	160
SM-70/1400	1400	61	70	160	320	160
SM-70/1500	1500	61	70	160	320	160
SM-70/1560	1560	61	70	160	320	160
SM-70/1800	1800	61	70	160	320	160
SM-70/2100	2100	61	70	160	320	160





Address: RM 808 BLD#4, 99 Shangwu Dadao, Huaqiao Kunshan Jiangsu 215332 China
Tel: +86 512 5035 7618 Email: sales6@weizhongmagnetics.com

Magnetic recess former



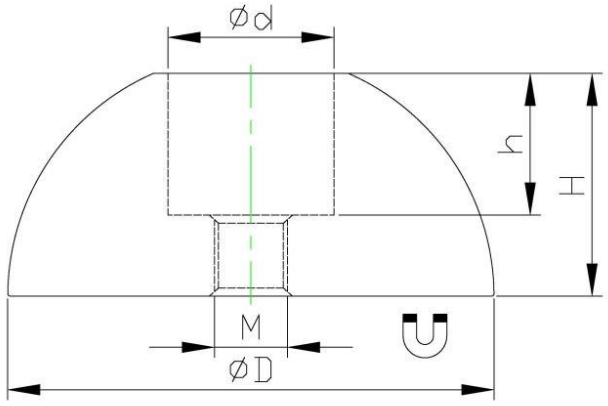

Item No	D	H	h	d	M	Force			Weight
	mm	mm	mm	mm		Lbs	Kg	N	g
RDNB60F-1.3t	60	27.5	17.5	20.5	M8	110	50	490	381.5
RDNB74F-2.5t	74	33	20	30	M10	220	100	980	690
RDNB94F-5t	94	42	27	38	M12	264	120	1176	1400
RDNB118F-10t	118	53	40	48.5	M12	418	190	1862	2625









*We test the holding force of magnetic assembly by attaching it on a 20mm thick steel sheet at room temperature and then pulling it slowly in vertical direction with the device that is sensitive enough to record the strength at the moment when magnetic assembly is separated from the steel sheet. This is to give you a reference where the actual holding force in real application could be different with the change of, for example, pulling direction, thickness of the surface et

Address: RM 808 BLD#4, 99 Shangwu Dadao, Huaqiao Kunshan Jiangsu 215332 China
Tel: +86 512 5035 7618 Email: sales6@weizhongmagnetics.com

NdFeB Recess Former Pro for Foot Anchor



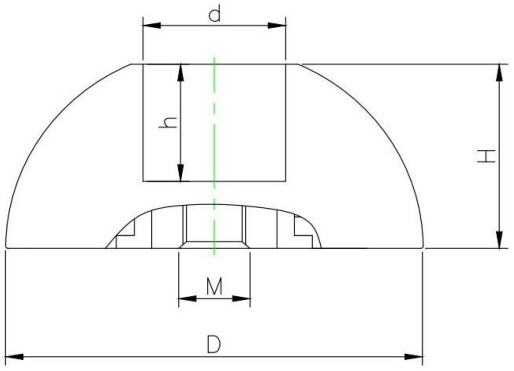

Item No	D	H	h	d	M	Force		
	mm	mm	mm	mm		Kg	N	Lbs
RDNB60F-P-1.3t	60	27.5	18.5	20.5	M8	150	1470	330
RDNB74F-P-2.5t	74	33	22	30	M10	190	1862	418
RDNB94F-P-5t	94	42	27	37	M12	230	2254	506
RDNB118F-P-10t	118	53	40	47.5	M12	360	3528	792

*We test the holding force of magnetic assembly by attaching it on a 20mm thick steel sheet at room temperature and then pulling it slowly in vertical direction with the device that is sensitive enough to record the strength at the moment when magnetic assembly is separated from the steel sheet. This is to give you a reference where the actual holding force in real application could be different with the change of, for example, pulling direction, thickness of the surface et

Address: RM 808 BLD#4, 99 Shangwu Dadao, Huaqiao Kunshan Jiangsu 215332 China
Tel: +86 512 5035 7618 Email: sales6@weizhongmagnetics.com

Rubberized magnetic former



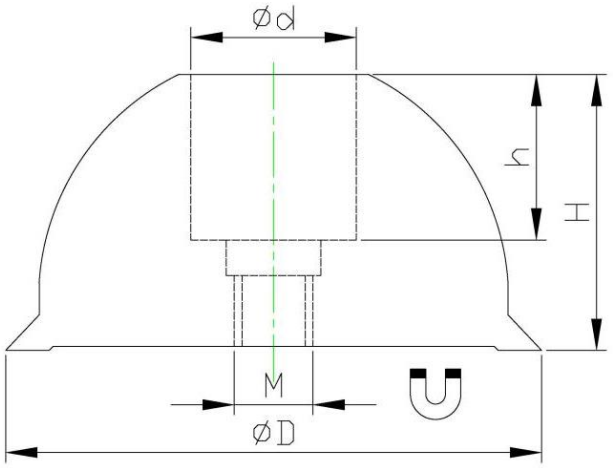

Item No	D	H	h	d	M	Force		
	mm	mm	mm	mm		Lbs	Kg	N
RCNB68F-1.3t	68	35	21	20	M10	110	50	490
RCNB83F-2.5t	83	36	22.5	29	M10	330	150	1470
RCNB105F-5t	105	42	28	38	M12	661	300	2940
RCNB130F-10t	130	53	39	48.5	M12	881	400	3920





*We test the holding force of magnetic assembly by attaching it on a 20mm thick steel sheet at room temperature and then pulling it slowly in vertical direction with the device that is sensitive enough to record the strength at the moment when magnetic assembly is separated from the steel sheet. This is to give you a reference where the actual holding force in real application could be different with the change of, for example, pulling direction, thickness of the surface et

Address: RM 808 BLD#4, 99 Shangwu Dadao, Huaqiao Kunshan Jiangsu 215332 China
Tel: +86 512 5035 7618 Email: sales6@weizhongmagnetics.com

NdFeB Rubberized Recess Former Pro for Foot Anchor



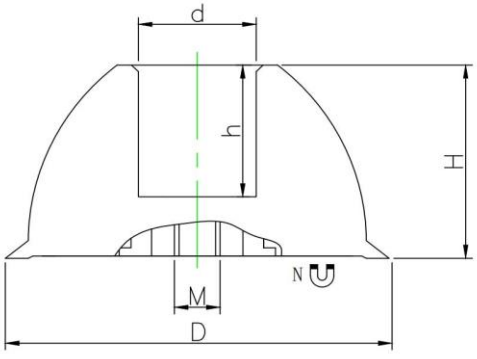

Item No	D	H	d	h	M	Force		
	mm	mm	mm	mm		Kg	N	Lbs
RCNB66F-P-1.3t	66	35	18.8	21	M10	100	980	220
RCNB84F-P-2.5t	84	44	25.8	30	M10	190	1862	418
RCNB104F-P-5t	104	52	35.25	34	M12	300	2940	660
RCNB125-P-10t	125	62	45.2	44	M12	400	3920	880

Address: RM 808 BLD#4, 99 Shangwu Dadao, Huaqiao Kunshan Jiangsu 215332 China
Tel: +86 512 5035 7618 Email: sales6@weizhongmagnetics.com

NdFeB Rubberized Magnetic Recess Former for Foot Anchor

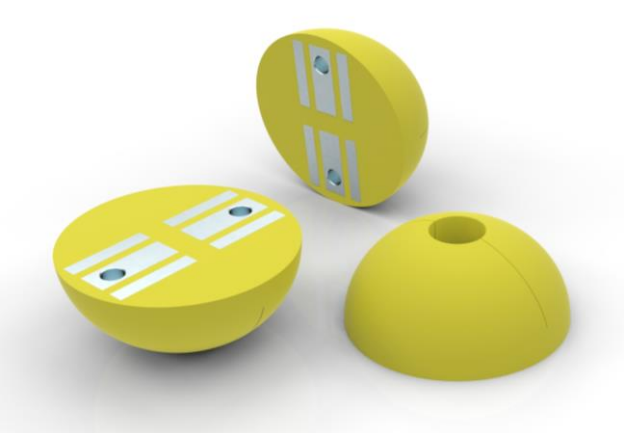

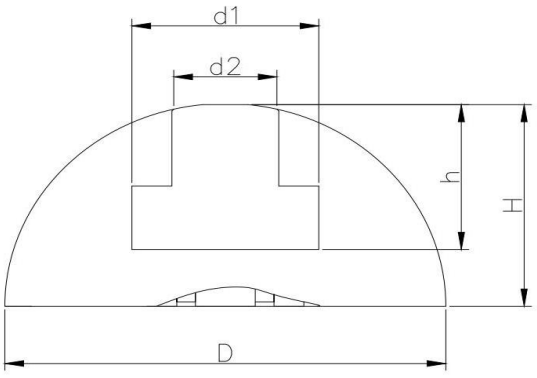

Item No	D	H	h	d1	d2	Force		
	mm	mm	mm	mm	mm	kg	N	Lbs
RCNL95	95	46.54	30	36	19	200	1960	440
RCNL118	118	58.7	42	50	27.6	300	2940	660





Address: RM 808 BLD#4, 99 Shangwu Dadao, Huaqiao Kunshan Jiangsu 215332 China
Tel: +86 512 5035 7618 Email: sales6@weizhongmagnetics.com

Rubber ring for recess former



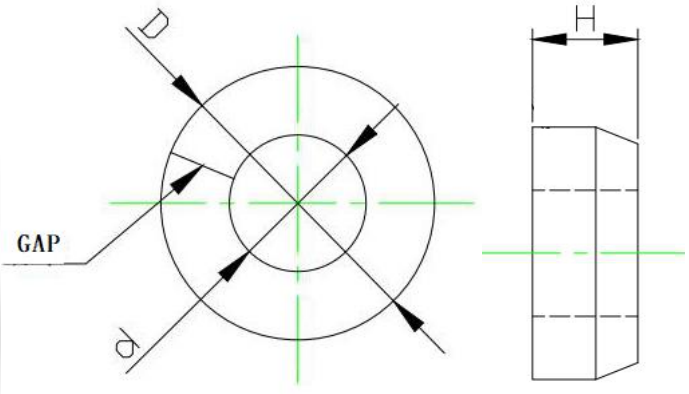

Item No.	D	d	h	For recess former
	mm	mm	mm	mm
PR 1.3t	22	10	11	D60
PR 2.5t	30	15	12.5	D74
PR 5t	39	20	14	D94
PR 10t	49	28	20	D118



Address: RM 808 BLD#4, 99 Shangwu Dadao, Huaqiao Kunshan Jiangsu 215332 China
Tel: +86 512 5035 7618 Email: sales6@weizhongmagnetics.com

Magnetic ferrule



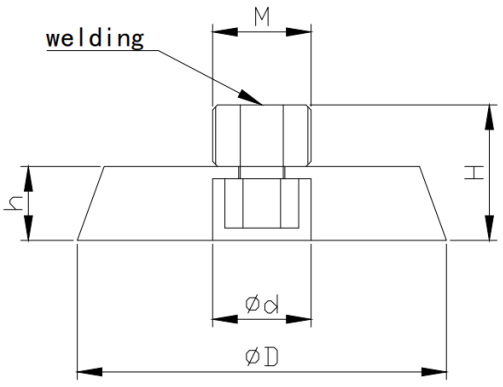

Item No	D	H	h	d	M	Force			Weight
	mm	mm	mm	mm		Lbs	Kg	N	g
MFP12	60	22	12	20	M12	110	50	490	234.1
MFP14	60	22	12	20	M14	110	50	490	235.5
MFP16	60	22	12	20	M16	110	50	490	237.9
MFP20	60	22	12	20	M20	110	50	490	247.1
MFP24	74	22	12	20	M24	264	120	1176	381.2
MFP30	90	24	12	20	M30	264	120	1176	580.5
MFP36	90	24	12	20	M36	264	120	1176	610.2
MFP42	115	30	15	20	M42	405	180	1764	1222
MFP52	135	30	15	20	M52	405	180	1764	1742





*We test the holding force of magnetic assembly by attaching it on a 20mm thick steel sheet at room temperature and then pulling it slowly in vertical direction with the device that is sensitive enough to record the strength at the moment when magnetic assembly is separated from the steel sheet. This is to give you a reference where the actual holding force in real application could be different with the change of, for example, pulling direction, thickness of the surface etc.

Address: RM 808 BLD#4, 99 Shangwu Dadao, Huaqiao Kunshan Jiangsu 215332 China
Tel: +86 512 5035 7618 Email: sales6@weizhongmagnetics.com

NdFeB Magnetic Fixing Plate for Socket System



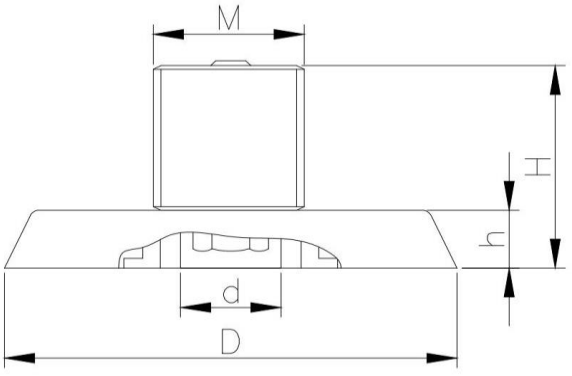

Item No	D	H	h	d	M	Force			Weight
	mm	mm	mm	mm		Lbs	Kg	N	g
MFP12-T	60	24	12	20	M12	198	90	882	213
MFP16-T	60	28	12	20	M16	198	90	882	237.9
MFP20-T	60	32	12	20	M20	198	90	882	263
MFP24 -T	74	36	12	20	M24	331	150	1470	400
MFP30-T	90	42	12	20	M30	440	200	1961	610
MFP36-T	90	48	12	20	M36	440	200	1961	610
MFP42 -T	90	48	12	20	M42	440	200	1961	650



*We test the holding force of magnetic assembly by attaching it on a 20mm thick steel sheet at room temperature and then pulling it slowly in vertical direction with the device that is sensitive enough to record the strength at the moment when magnetic assembly is separated from the steel sheet. This is to give you a reference where the actual holding force in real application could be different with the change of, for example, pulling direction, thickness of the surface etc.

Address: RM 808 BLD#4, 99 Shangwu Dadao, Huaqiao Kunshan Jiangsu 215332 China
Tel: +86 512 5035 7618 Email: sales6@weizhongmagnetics.com

Recess former for other anchors



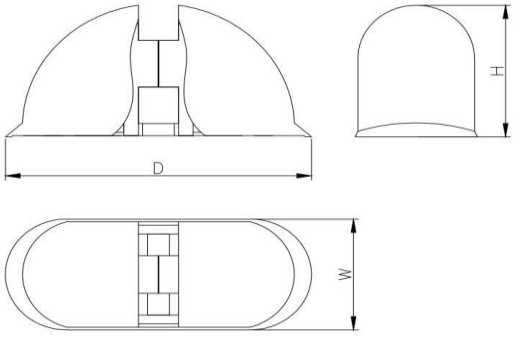

Item No	D	W	H	Note
	mm	mm	mm	
GU-TPA-025	96	41	47	flat anchor 2.5t
GU-TPA-050	125	50	60	flat anchor 5.0t

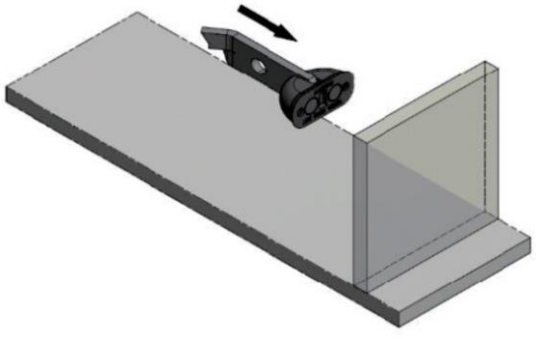



*We test the holding force of magnetic assembly by attaching it on a 20mm thick steel sheet at room temperature and then pulling it slowly in vertical direction with the device that is sensitive enough to record the strength at the moment when magnetic assembly is separated from the steel sheet. This is to give you a reference where the actual holding force in real application could be different with the change of, for example, pulling direction, thickness of the surface etc.

Address: RM 808 BLD#4, 99 Shangwu Dadao, Huaqiao Kunshan Jiangsu 215332 China
Tel: +86 512 5035 7618 Email: sales6@weizhongmagnetics.com

Recess former for other anchors



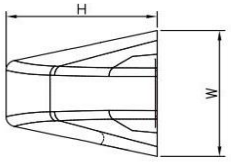

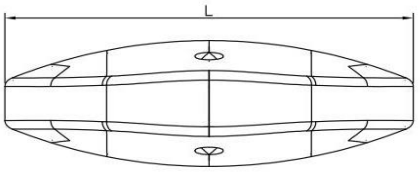

Item No	L	W	H	Force	Note
	mm	mm	mm	kg	
CRRF9018	229	76.5	84.8	80	A anchor

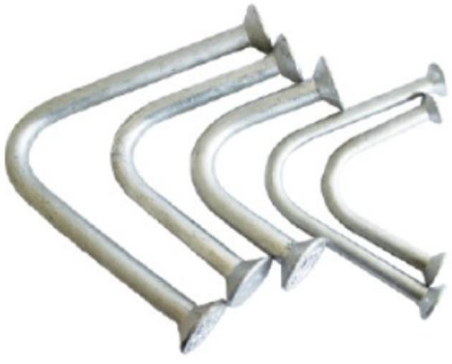



*We test the holding force of magnetic assembly by attaching it on a 20mm thick steel sheet at room temperature and then pulling it slowly in vertical direction with the device that is sensitive enough to record the strength at the moment when magnetic assembly is separated from the steel sheet. This is to give you a reference where the actual holding force in real application could be different with the change of, for example, pulling direction, thickness of the surface etc.

Address: RM 808 BLD#4, 99 Shangwu Dadao, Huaqiao Kunshan Jiangsu 215332 China
Tel: +86 512 5035 7618 Email: sales6@weizhongmagnetics.com

Precast insert magnet



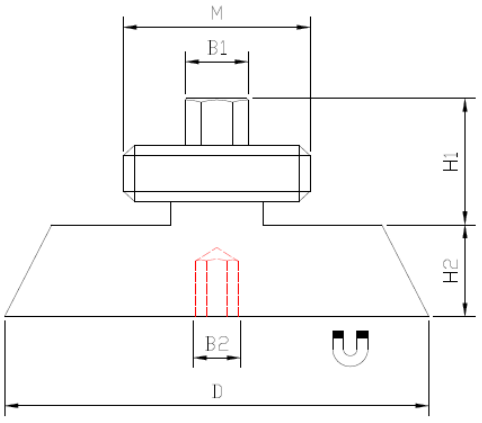

Item No	D	H1	H2	B1	B2	M	Force			Weight
	mm	mm	mm	mm	mm		Lbs	Kg	N	g
RBNB42x11.7mm	42	16.1	11.7	8	6	M16	110	50	490	95
RBNB55x11.7mm	55	16.1	11.7	8	6	M24	220	100	980	178







*We test the holding force of magnetic assembly by attaching it on a 20mm thick steel sheet at room temperature and then pulling it slowly in vertical direction with the device that is sensitive enough to record the strength at the moment when magnetic assembly is separated from the steel sheet. This is to give you a reference where the actual holding force in real application could be different with the change of, for example, pulling direction, thickness of the surface etc.

Address: RM 808 BLD#4, 99 Shangwu Dadao, Huaqiao Kunshan Jiangsu 215332 China
Tel: +86 512 5035 7618 Email: sales6@weizhongmagnetics.com

Magnetic nailing plate

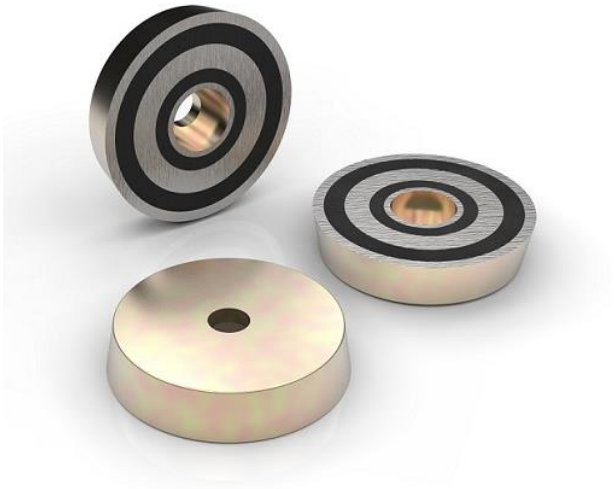

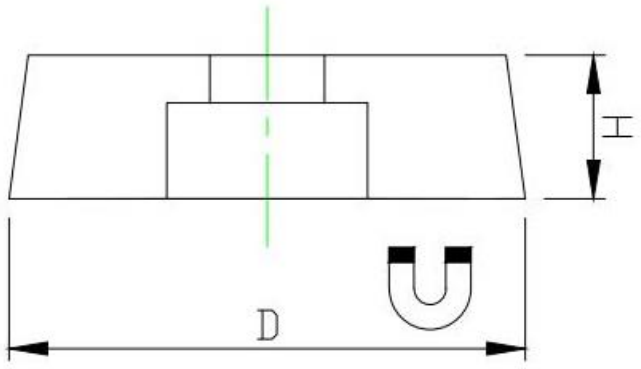

Item No.	D	H	Force			Weight
	mm	mm	Kg	N	Lbs	g
RBNB54x15	54	15	105	1029	231	240
RBNB70x15	70	15	190	1862	418	320











*We test the holding force of magnetic assembly by attaching it on a 20mm thick steel sheet at room temperature and then pulling it slowly in vertical direction with the device that is sensitive enough to record the strength at the moment when magnetic assembly is separated from the steel sheet. This is to give you a reference where the actual holding force in real application could be different with the change of, for example, pulling direction, thickness of the surface etc.

Address: RM 808 BLD#4, 99 Shangwu Dadao, Huaqiao Kunshan Jiangsu 215332 China
Tel: +86 512 5035 7618 Email: sales6@weizhongmagnetics.com

Precast electrical box magnet



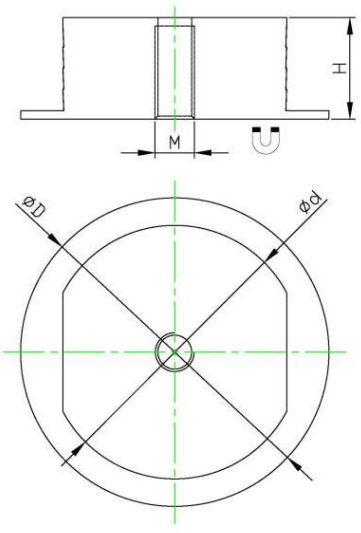

Item No	D	d	H	M	Force			Weight
	mm	mm	mm		Lbs	Kg	N	g
RONB73F	73	60	24	8	132	60	588	296.7





*We test the holding force of magnetic assembly by attaching it on a 20mm thick steel sheet at room temperature and then pulling it slowly in vertical direction with the device that is sensitive enough to record the strength at the moment when magnetic assembly is separated from the steel sheet. This is to give you a reference where the actual holding force in real application could be different with the change of, for example, pulling direction, thickness of the surface etc.

Address: RM 808 BLD#4, 99 Shangwu Dadao, Huaqiao Kunshan Jiangsu 215332 China
Tel: +86 512 5035 7618 Email: sales6@weizhongmagnetics.com

Precast magnet holder plate

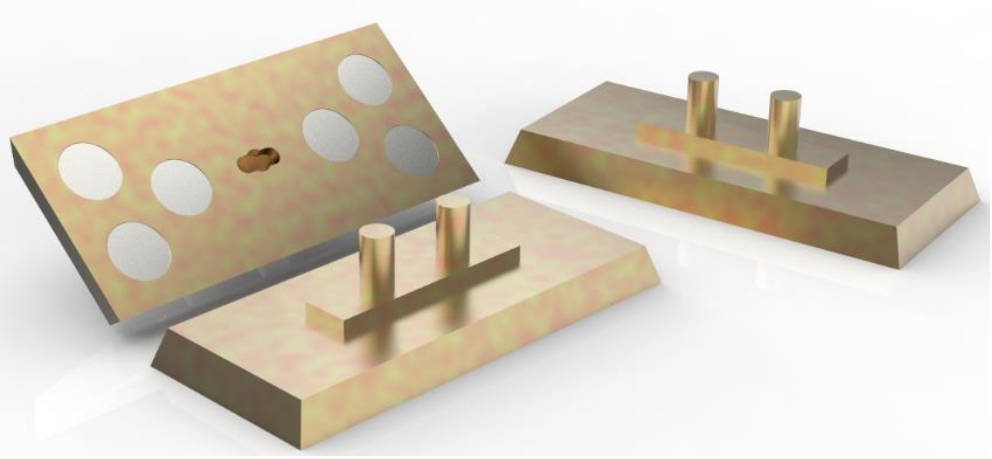

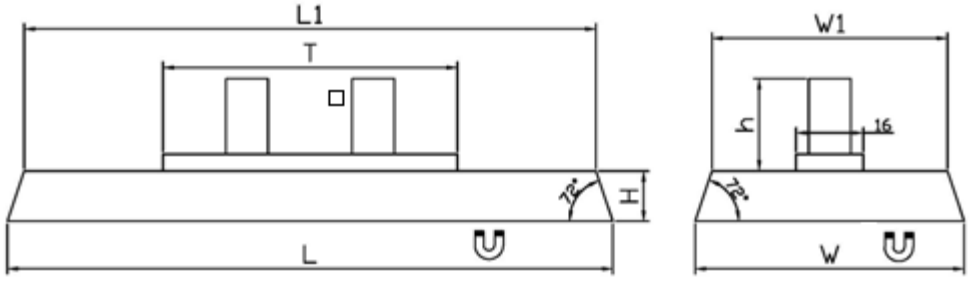

Item No.	L	L1	W	W1	H	T	h	Force		
	mm	mm	mm	mm	mm	mm	mm	Kg	N	Lbs
8NGXXF0144	144	136	64	56	12	70	22	90	882	198



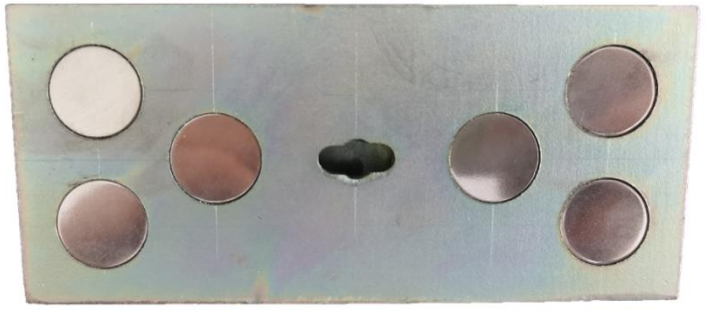

*We test the holding force of magnetic assembly by attaching it on a 20mm thick steel sheet at room temperature and then pulling it slowly in vertical direction with the device that is sensitive enough to record the strength at the moment when magnetic assembly is separated from the steel sheet. This is to give you a reference where the actual holding force in real application could be different with the change of, for example, pulling direction, thickness of the surface etc.

Address: RM 808 BLD#4, 99 Shangwu Dadao, Huaqiao Kunshan Jiangsu 215332 China
Tel: +86 512 5035 7618 Email: sales6@weizhongmagnetics.com

Precast wire loop box magnet

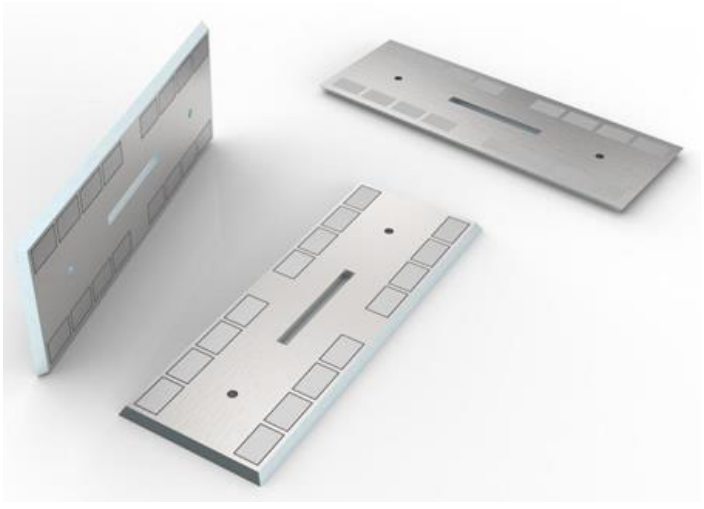

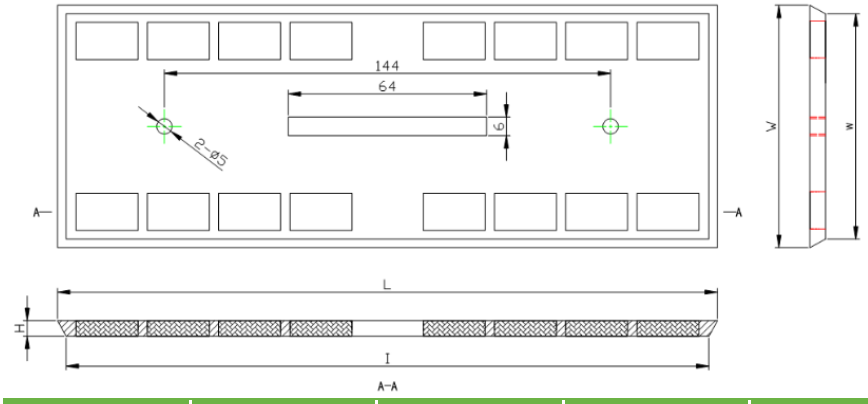

Item No.	L	I	W	w	H	QTY OF MAGNETS
	mm	mm	mm	mm	mm	PCS
NMP-213	213	207.5	78	72.5	5	16
NMP-178	178	172.5	78	72.5	5	12

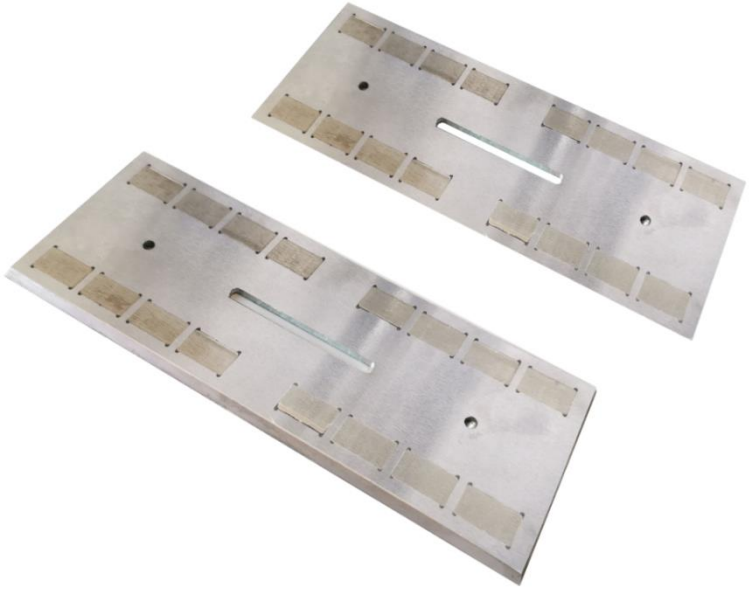

Address: RM 808 BLD#4, 99 Shangwu Dadao, Huaqiao Kunshan Jiangsu 215332 China
Tel: +86 512 5035 7618 Email: sales6@weizhongmagnetics.com

07 Magnetic Poster Hanger

Magnetic hangers for posters is just a very general description of their application. In fact they hang not only posters but other objects like notes, banners, labels or whatever the user wants to as long as its within the load limit.



PRODUCT INFORMATION

1) Large range of magnetic poster hangers are available to meet your specific applications.
2) Easy and convenient to use.
3) Enable your advertisement eye-catching and attractive.

Address: RM 808 BLD#4, 99 Shangwu Dadao, Huaqiao Kunshan Jiangsu 215332 China
Tel: +86 512 5035 7618 Email: sales6@weizhongmagnetics.com

Channel magnet with hinge PVC gripper

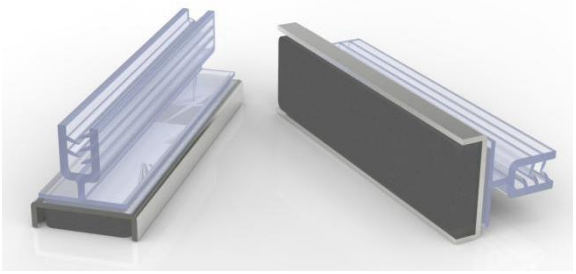

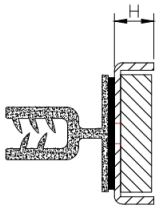

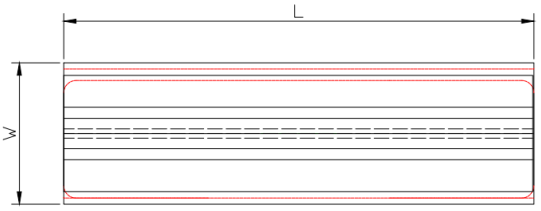

Item No.	L	W	H	Force		
	mm	mm	mm	Kg	N	Lbs
CHFL3-PVC-Y	76.2	22.86	6.38	10	98	22



Channel magnet with S PVC gripper

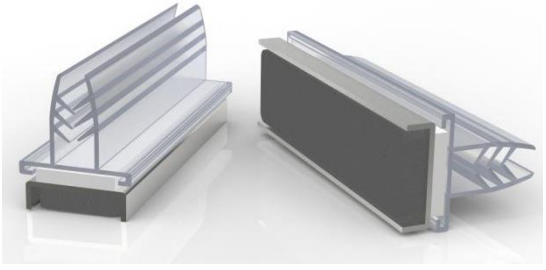

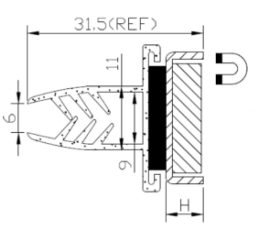

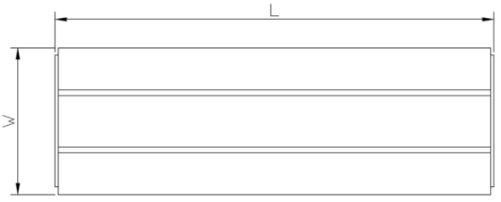

Item No.	L	W	H	Force		
	mm	mm	mm	Kg	N	Lbs
CHFL3-PVC-S	76.2	22.86	6.38	10	98	22



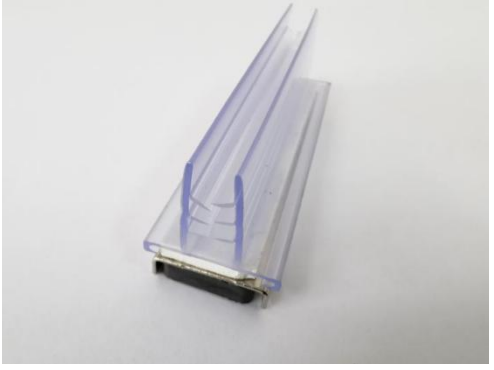

Address: RM 808 BLD#4, 99 Shangwu Dadao, Huaqiao Kunshan Jiangsu 215332 China
Tel: +86 512 5035 7618 Email: sales6@weizhongmagnetics.com

Channel magnet with vertical PVC gripper



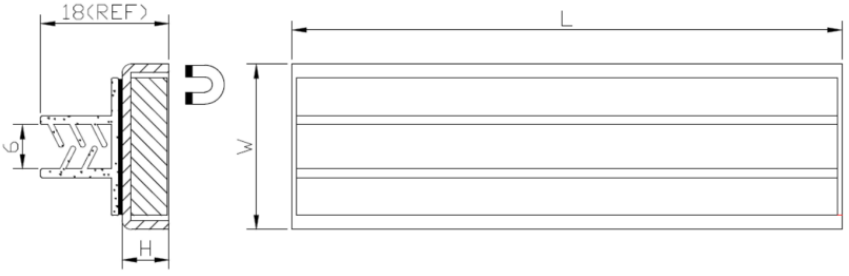

Item No.	L	W	H	Force		
	mm	mm	mm	Kg	N	Lbs
CHFL1-PVC	25.4	22.23	6.35	4	39	9
CHFL3-PVC	76.2	22.86	6.38	10	98	22

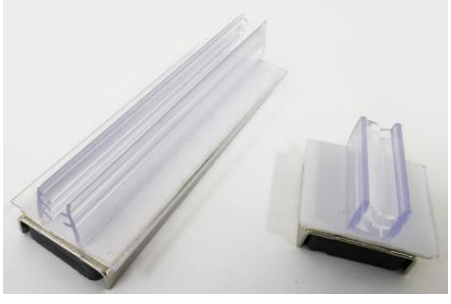

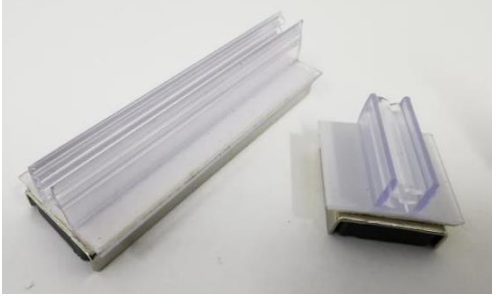

Ferrite channel magnet with horizon PVC gripper



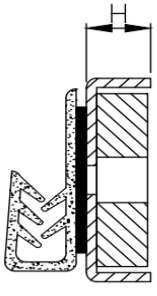

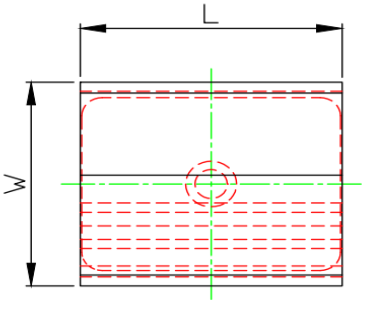

Item No.	L	W	H	Force		
	mm	mm	mm	Kg	N	Lbs
CHFL1-PC	25.4	22.23	6.35	4	39	9
CHFL3-PC	76.2	22.86	6.38	10	98	22





Address: RM 808 BLD#4, 99 Shangwu Dadao, Huaqiao Kunshan Jiangsu 215332 China
Tel: +86 512 5035 7618 Email: sales6@weizhongmagnetics.com

Magnetic sign base with horizon gripper



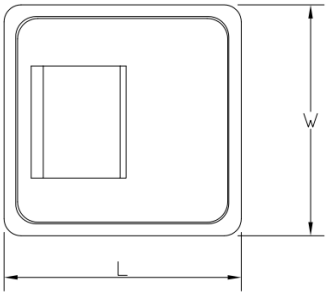

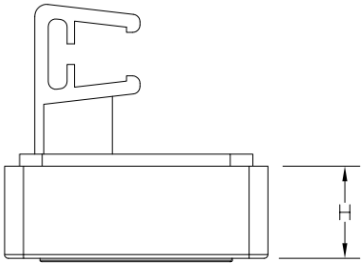

Item No.	Magnetic base(mm)			Total Height(mm)	Color
	L	W	H		
GIPOS E15	35	34	12	35	Beige
GIPOS E15B	35	34	12	35	Black



Magnetic sign base with vertical gripper

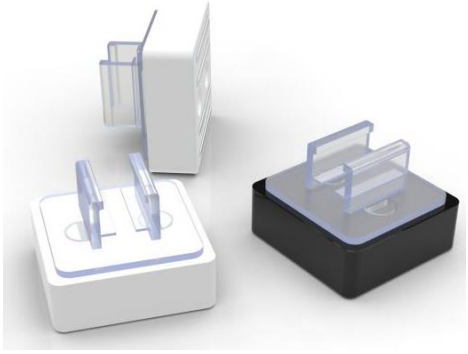

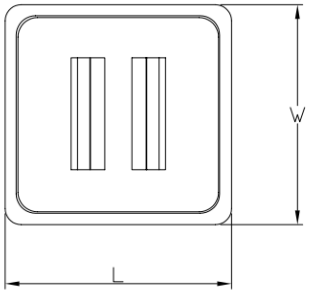

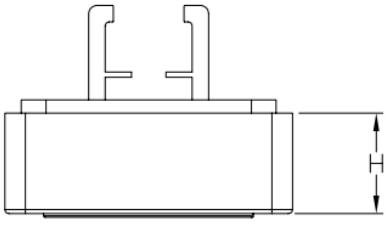

Item No.	Magnetic base(mm)			Total Height(mm)	Color
	L	W	H		
GIPOS E14	35	34	12	25	Beige
GIPOS E14B	35	34	12	25	Black



Address: RM 808 BLD#4, 99 Shangwu Dadao, Huaqiao Kunshan Jiangsu 215332 China
Tel: +86 512 5035 7618 Email: sales6@weizhongmagnetics.com

Magnetic sign base with a swivel gripper



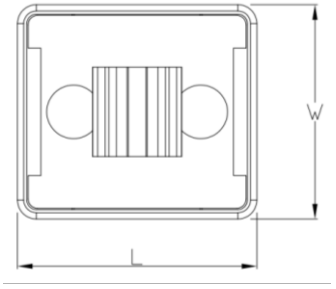

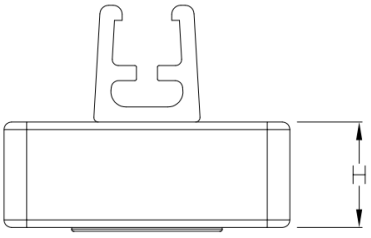

Item No.	Magnetic base(mm)			Total Height (mm)	Color	Gripper
	L	W	H			
GIPOS K21	38	34	14	30	Beige	Swivel
GIPOS K21B	38	34	14	30	Black	Swivel



Magnetic sign base with two swivel grippers



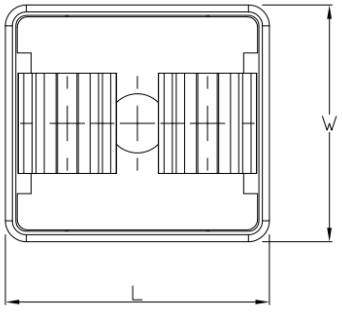

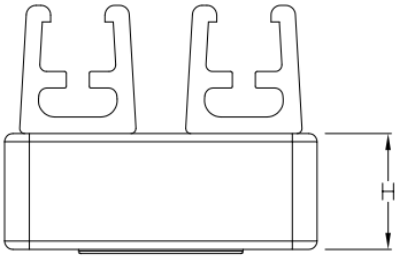

Item No.	Magnetic base(mm)			Total Height (mm)	Color	Gripper
	L	W	H			
GIPOS K21C	38	34	14	30	Beige	Swivel
GIPOS K21CB	38	34	14	30	Black	Swivel







Address: RM 808 BLD#4, 99 Shangwu Dadao, Huaqiao Kunshan Jiangsu 215332 China
Tel: +86 512 5035 7618 Email: sales6@weizhongmagnetics.com

Magnetic base with rotating frame holder



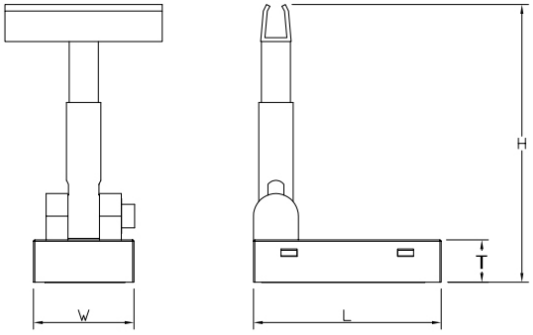

Item No.	L	W	T	H	Color
	mm	mm	mm	(mm)	
GIPOS C11	71	38	16	105	Beige
GIPOS C11B	71	38	16	105	Black



Plastic frame magnetic base with clip

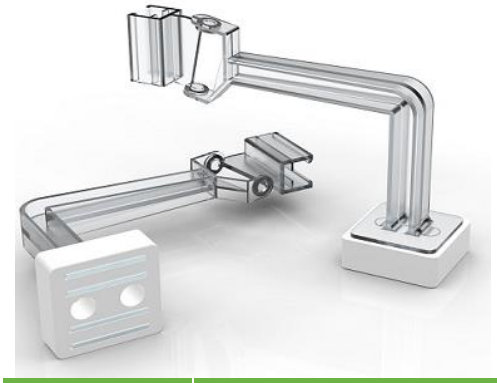

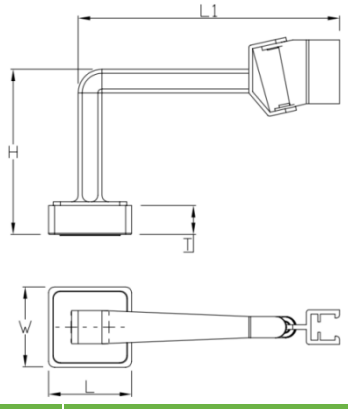

Item No.	Magnetic base(mm)			Total Height(mm)	Length(mm)
	L	W	T	H	L1
GIPOS S21	35	35	13	70	115



Address: RM 808 BLD#4, 99 Shangwu Dadao, Huaqiao Kunshan Jiangsu 215332 China
Tel: +86 512 5035 7618 Email: sales6@weizhongmagnetics.com

Rectangular magnetic base with L aluminum tube and hooks



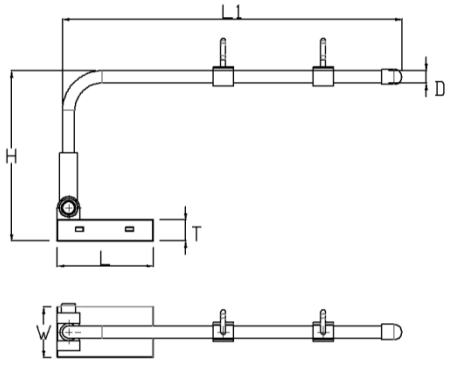

Item No.	Magnetic base(mm)			Aluminum Pole(mm)		Total Height (mm)	Weight
	L	W	T	D	L1	H	g
GIPOS R8-1	71	38	16	9.4	300	125	155



Magnetic sign holder with grey base and tube

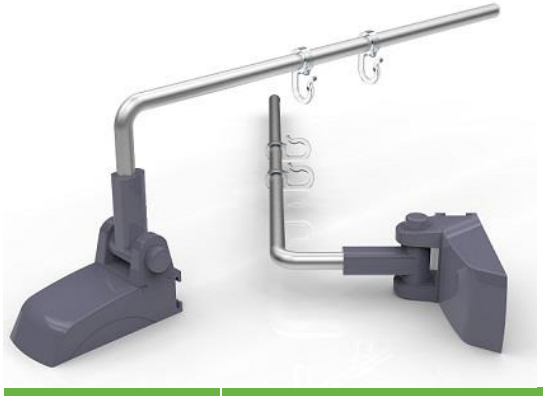

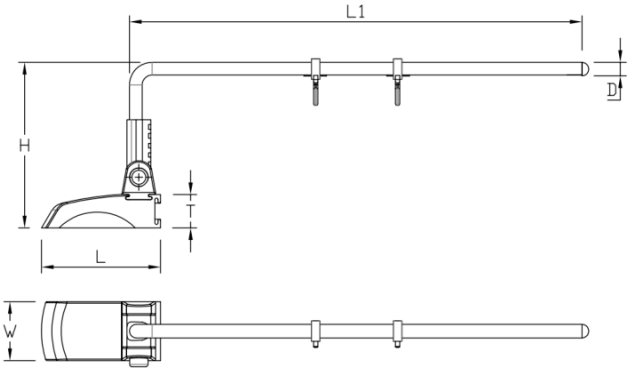

Item No.	Magnetic base(mm)			Aluminum Pole(mm)		Total Height (mm)	Weight
	L	W	T	D	L1	H	g
GIPOS G3	79	38	23	9	300	140	177



Address: RM 808 BLD#4, 99 Shangwu Dadao, Huaqiao Kunshan Jiangsu 215332 China
Tel: +86 512 5035 7618 Email: sales6@weizhongmagnetics.com

Magnetic sign holder with grey base and PVC gripper



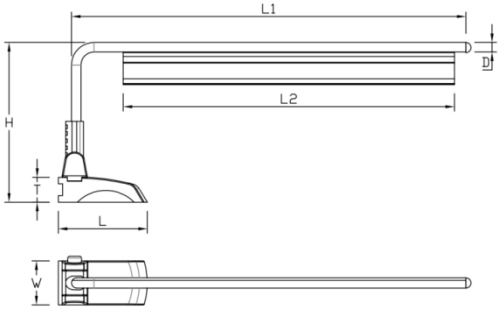

Item No.	Magnetic base(mm)			Aluminum Pole(mm)		PVC gripper Length(mm)	Total Height (mm)
	L	W	T	D	L1	L2	H
GIPOS G3-2	71	38	16	9	350	294	140
GIPOS G3-3	71	38	16	9	300	210	140





Magnetic sign holder with grey base and PVC gripper



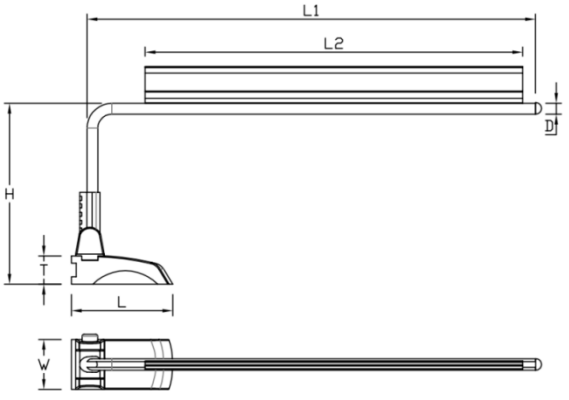

Item No.	Magnetic base(mm)			Aluminum Pole(mm)		PVC gripper Length(mm)	Total Height (mm)
	L	W	T	D	L1	L2	H
GIPOS G3-1	79	38	23	9	350	294	140





Address: RM 808 BLD#4, 99 Shangwu Dadao, Huaqiao Kunshan Jiangsu 215332 China
Tel: +86 512 5035 7618 Email: sales6@weizhongmagnetics.com

Magnetic sign holder with upright pole



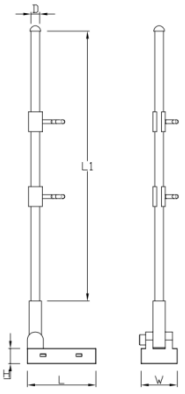

Item No.	Magnetic base(mm)			Aluminum Pole(mm)		Color
	L	W	H	D	L1	
GIPOS R8	71	38	16	9.2	285	Beige
GIPOS R8B	71	38	16	9.2	285	Black





Circular magnetic base with clip



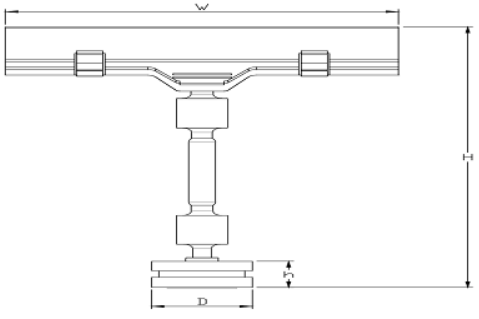

Item No.	Magnetic base(mm)		Width of Clip(mm)
	D	J	W
GIPOS J19	20	11	80



Address: RM 808 BLD#4, 99 Shangwu Dadao, Huaqiao Kunshan Jiangsu 215332 China
Tel: +86 512 5035 7618 Email: sales6@weizhongmagnetics.com

Boot shape magnetic base

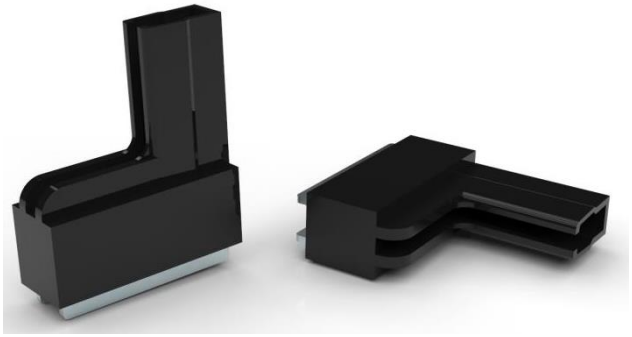

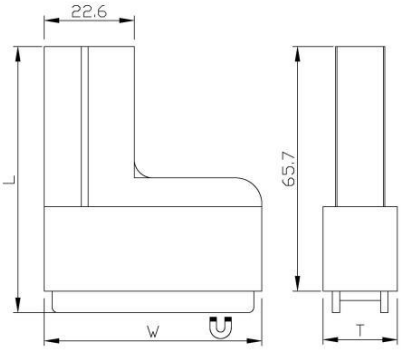

Item No.	L	W	T	Force			Color
	mm	mm	mm	Kg	N	Lbs	
G25	71.2	58.5	20.2	25	245	55	Beige
G25B	71.2	58.5	20.2	25	245	55	Black
G25C	71.2	58.5	20.2	25	245	55	Clear



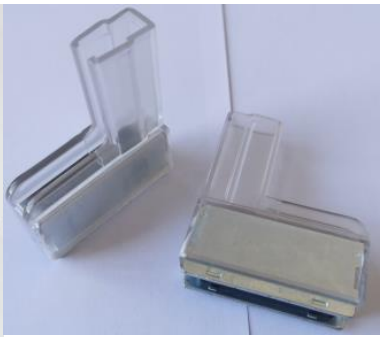

Address: RM 808 BLD#4, 99 Shangwu Dadao, Huaqiao Kunshan Jiangsu 215332 China
Tel: +86 512 5035 7618 Email: sales6@weizhongmagnetics.com

Ferrite plastic cased pot magnet



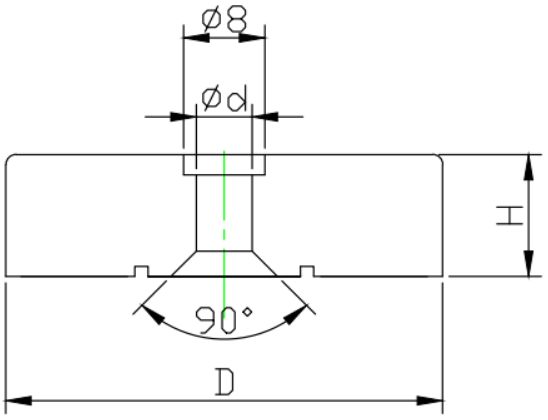



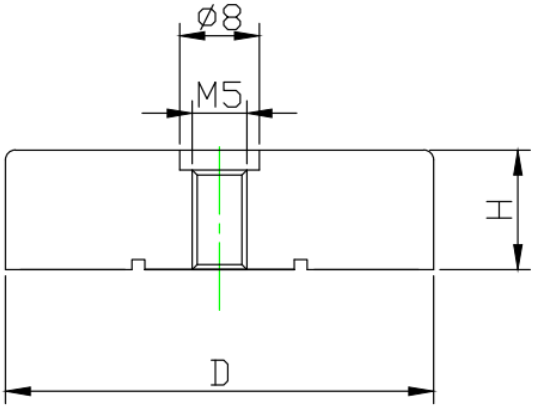

Item No.	D	H	d		Force			Weight
	mm	mm	mm		Kg	N	Lbs	g
PCFB43C-W	43	12	5.5	countersunk	12	120	27	76.3
PCFB43F-W-M5	43	12	/	M5	12	120	27	77





Address: RM 808 BLD#4, 99 Shangwu Dadao, Huaqiao Kunshan Jiangsu 215332 China
Tel: +86 512 5035 7618 Email: sales6@weizhongmagnetics.com

Plastic cased magnet with loop

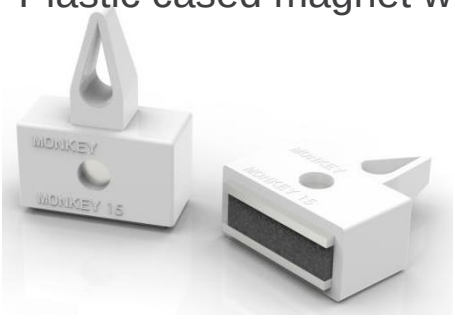

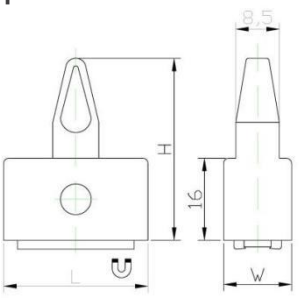

Item No.	L	W	H	Force		
	mm	mm	mm	Kg	N	Lbs
8FGPJF0015	28.2	13.3	35.5	9	88	20



Ferrite memo magnet with handle, white powder coated



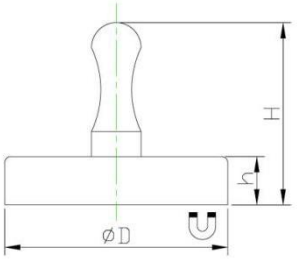

Item No	D	h	H	Force			Weight
	mm	mm	mm	Kg	N	Lbs	g
TFE25H-W	25	7	29	4	40	9	22
TFE32H-W	32	7	29	7	70	15	33.5
TFE36H-W	36	7.7	29	8	80	18	45
TFE40H-W	40	8	29	10	100	22	57.5



Address: RM 808 BLD#4, 99 Shangwu Dadao, Huaqiao Kunshan Jiangsu 215332 China
Tel: +86 512 5035 7618 Email: sales6@weizhongmagnetics.com

Ferrite white powder coated magnet with knob



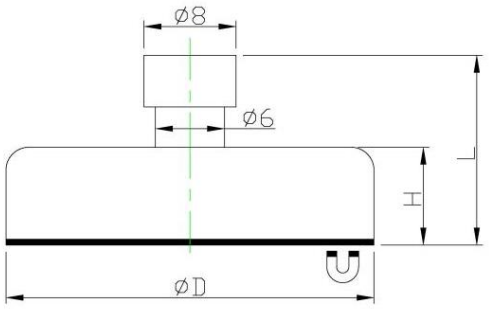

Item No.	D	H	L	Force (with protect film)		
	mm	mm	mm	Kg	N	Lbs
TFE32T-W	32	8	16	6	58	13



Ferrite pot magnet with metal rod

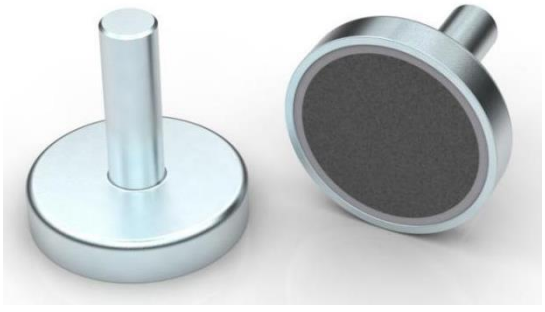

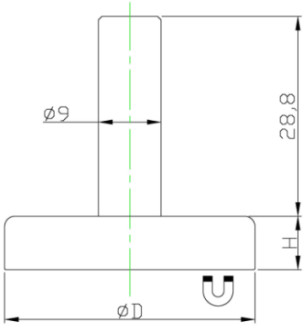

Item No.	D	H	ROD	Force		
	mm	mm	mm	Kg	N	Lbs
8FGPPY3617	36	7.7	D9x28.8mm	5	49	11



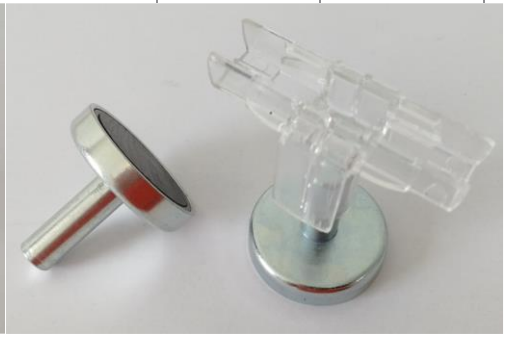

Address: RM 808 BLD#4, 99 Shangwu Dadao, Huaqiao Kunshan Jiangsu 215332 China
Tel: +86 512 5035 7618 Email: sales6@weizhongmagnetics.com

Plastic frame with PVC pocket



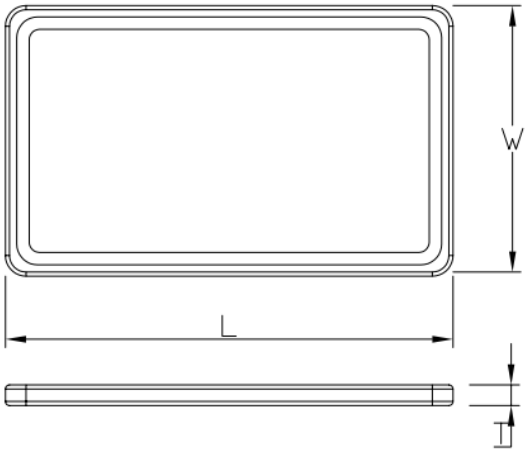

Item No.	L	W	T
	mm	mm	mm
POSD1A3-yellow	426	304	11
POSD1A3-red	426	304	11
POSD1A3-green	426	304	11
POSD1A3-black	426	304	11
POSD1A3-white	426	304	11
POSD1A4-yellow	215	305	11
POSD1A4-red	215	305	11
POSD1A4-green	215	305	11
POSD1A4-black	215	305	11
POSD1A4-white	215	305	11
POSD1A5-yellow	155	217	11
POSD1A5-red	155	217	11
POSD1A5-green	155	217	11
POSD1A5-black	155	217	11
POSD1A5-white	155	217	11



Address: RM 808 BLD#4, 99 Shangwu Dadao, Huaqiao Kunshan Jiangsu 215332 China
Tel: +86 512 5035 7618 Email: sales6@weizhongmagnetics.com

NdFeB self-adhesive magnets





Size	Grade	Coating	Quantity	Adhesive Material	Weight
mm			per Bag		g
D6x0.75	N35	NiCuNi	20	3M 467/PE FOAM	0.16
D8x0.75	N35	NiCuNi	20	3M 467/PE FOAM	0.29
D9.5x0.75	N35	NiCuNi	20	3M 467/PE FOAM	0.40
D10x0.6	N35	NiCuNi	20	3M 467/PE FOAM	0.36
D10x1	N35	NiCuNi	20	3M 467/PE FOAM	0.60
D13x1	N35	NiCuNi	20	3M 467/PE FOAM	1.00
D15x2	N35	NiCuNi	10	3M 467/PE FOAM	2.70
D20x1	N35	NiCuNi	10	3M 467/PE FOAM	2.40
D20x2	N35	NiCuNi	10	3M 467/PE FOAM	4.80
D25x2	N35	NiCuNi	10	3M 467/PE FOAM	7.50
L10x5x1	N35	NiCuNi	40	3M 467/PE FOAM	0.38
L10x10x1	N35	NiCuNi	20	3M 467/PE FOAM	0.76
L15x8x1	N35	NiCuNi	20	3M 467/PE FOAM	0.91
L20x10x1	N35	NiCuNi	20	3M 467/PE FOAM	1.50

Note: 1) The above table only shows some hot sellers, other dimensions are also possible.

2) Magnets with PE foam are suggested to pack in tubes to avoid deformation.



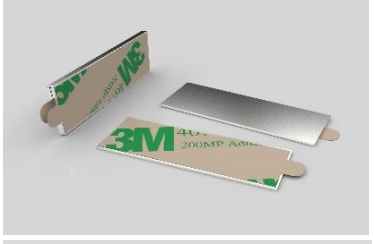



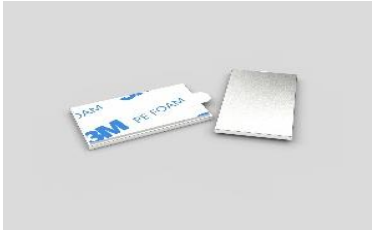



Address: RM 808 BLD#4, 99 Shangwu Dadao, Huaqiao Kunshan Jiangsu 215332 China
Tel: +86 512 5035 7618 Email: sales6@weizhongmagnetics.com

Magnetic detacher





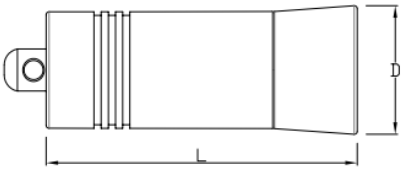

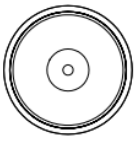

Item No.	D	L
	mm	mm
8NLXXY0215	21.5	53.2

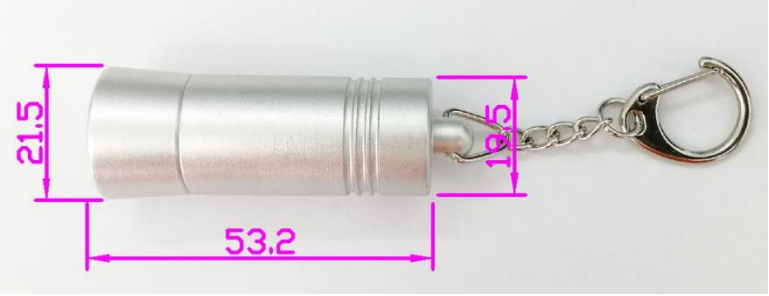

Pad lock

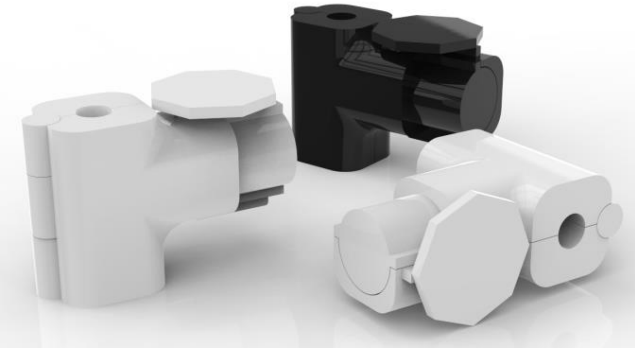

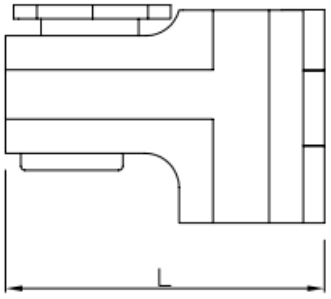

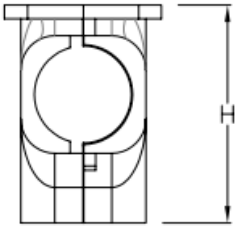

Item No.	L	H
	mm	mm
8XGABC0378	37.8	25.5

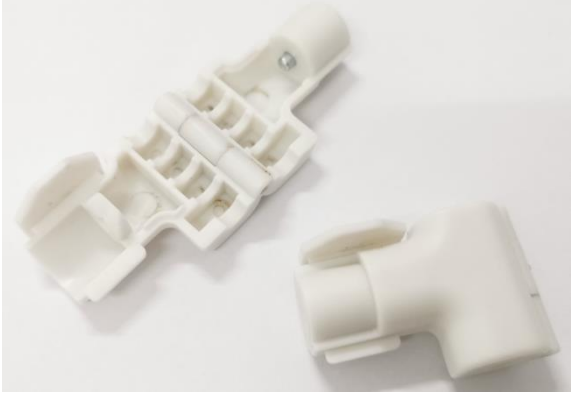

Address: RM 808 BLD#4, 99 Shangwu Dadao, Huaqiao Kunshan Jiangsu 215332 China
Tel: +86 512 5035 7618 Email: sales6@weizhongmagnetics.com

Flexible magnet tape with self-adhesive



Item No.	L	W	T	Magnetization way	UV coating	Self-adhesive
	mm	mm	mm		Yes	Yes
FeB30000X25XT1mm -1	30000	25	1	Isotropic	Yes	Chinese brand

Note: Standard length is 30M. Customized length is also available upon request.

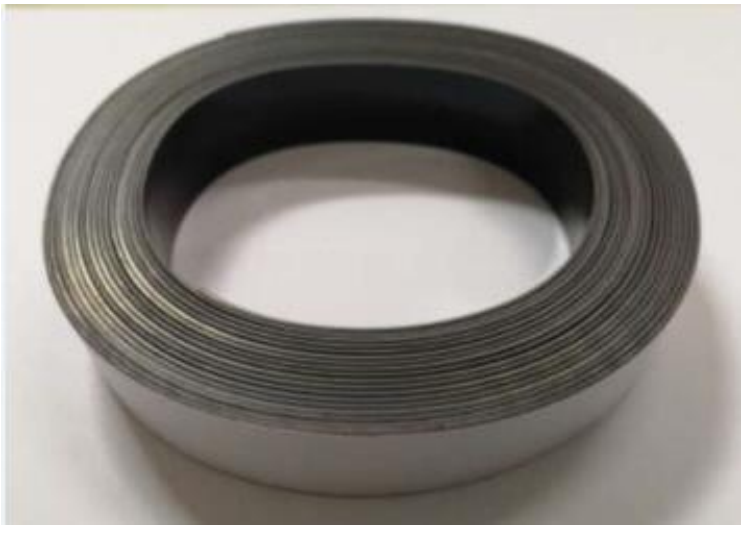



Address: RM 808 BLD#4, 99 Shangwu Dadao, Huaqiao Kunshan Jiangsu 215332 China
Tel: +86 512 5035 7618 Email: sales6@weizhongmagnetics.com

Magnetic C profile

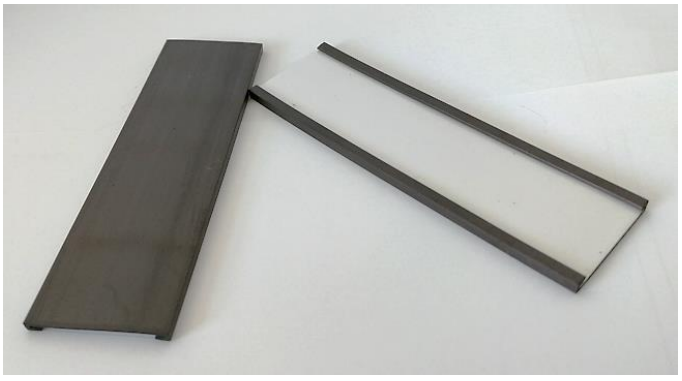

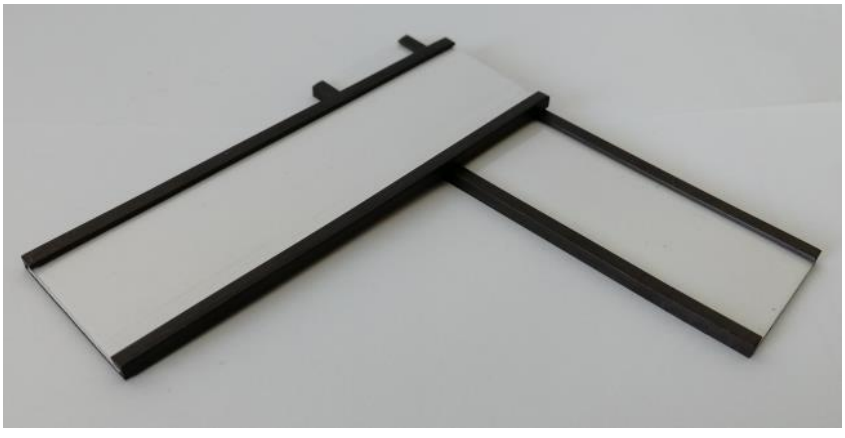

Item No.	Width(mm)	Thickness(mm)
GIC10	10	1
GIC15	15	1
GIC20	20	1
GIC25	25	1
GIC30	30	1
GIC40	40	1
GIC50	50	1

Magnetic property	Magnetic property Value							
	Br≥		Hcb≥		Hcj≥		BH(max)≥	
	mT	Gs	KA/m	Oe	KA/m	Oe	KJ/m³	MGOe
Isotropic	185	1850	112	1400	147	1850	5.97	0.75
Anisotropic	245	2450	167	2100	195	2450	11.54	1.45

Note: Standard length is 30M to 50M. Customized length is also available upon request.

Address: RM 808 BLD#4, 99 Shangwu Dadao, Huaqiao Kunshan Jiangsu 215332 China
Tel: +86 512 5035 7618 Email: sales6@weizhongmagnetics.com

08 Office Magnet

This group of products is mostly found being used in offices as stationery

There are kinds of decorative magnets for office. The office magnets like memo fridge magnets and round whiteboard magnets feature smaller size (mostly), more colorful or shining finish, more decorative.



PRODUCT INFORMATION

1) Used on whiteboards, fridges and memo-boards for attaching notes, messages, documents or paper in offices, classrooms, homes or factories.
2) Different strength, coating or colors can be offered. .
3) Retail blister package is possible.

Address: RM 808 BLD#4, 99 Shangwu Dadao, Huaqiao Kunshan Jiangsu 215332 China
Tel: +86 512 5035 7618 Email: sales6@weizhongmagnetics.com

NdFeB memo magnet with brushed finish



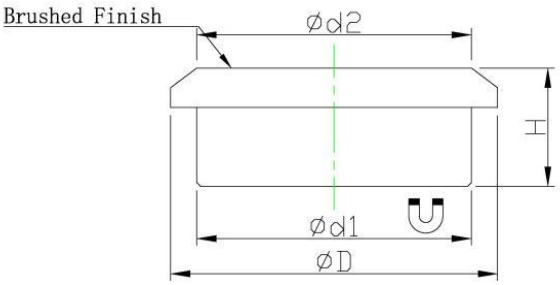

Item No.	D	H	d1	d2	Force			Weight
	mm	mm	mm	mm	Kg	N	Lbs	g
M-CAPN16	16	7	12.5	12.5	5	49	11	8
M-CAPN22	22	9	18	18	8	80	17	18.5
M-CAPN25	25	9	21	21	13	130	28	25
M-CAPN30	30	9	27	26	21	210	46	40

Note: Retail packing can be fulfilled.





Address: RM 808 BLD#4, 99 Shangwu Dadao, Huaqiao Kunshan Jiangsu 215332 China
Tel: +86 512 5035 7618 Email: sales6@weizhongmagnetics.com

Plastic handle memo magnet pick-up



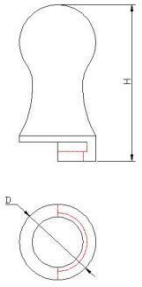

Item No.	D	H	Color
	mm	mm	
PCRD30-R	30	62	RED



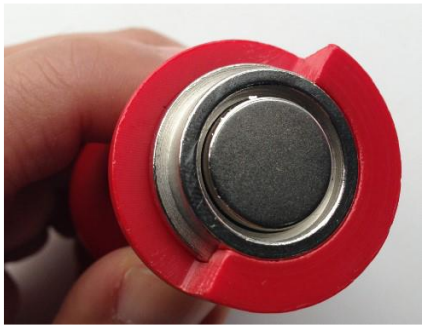

Memo magnet pick-up with key ring



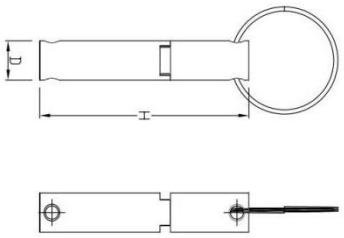

Item No.	D	H	STEEL
	mm	mm	
RDNE15X80R	15	80	430





Address: RM 808 BLD#4, 99 Shangwu Dadao, Huaqiao Kunshan Jiangsu 215332 China
Tel: +86 512 5035 7618 Email: sales6@weizhongmagnetics.com

NdFeB memo magnet with handle, lathe machined



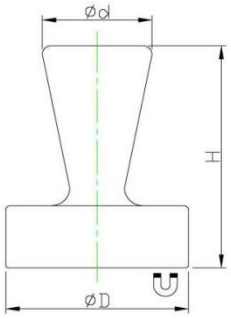

Item No.	D	H	d	Force			weight
	mm	mm	mm	Kg	N	Lbs	g
M-D12SEAL	12	16	8	1	10	2	9.5
M-D16SEAL	16	16	10	2	20	4	16
M-D20SEAL	20	25	12	4	40	9	33

NdFeB memo magnet with plastic case



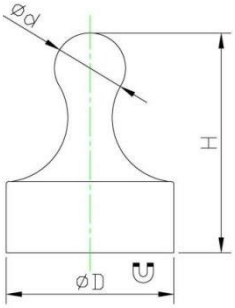

Item No.	D	H	d	Force			weight
	mm	mm	mm	Kg	N	Lbs	g
PC12SEAL	12	20	7	0.8	8	1.7	4
PC19SEAL	19	25.5	10	1.5	15	3	8
PC29SEAL	29	38.5	12	2.3	23	5	20.5



Address: RM 808 BLD#4, 99 Shangwu Dadao, Huaqiao Kunshan Jiangsu 215332 China
Tel: +86 512 5035 7618 Email: sales6@weizhongmagnetics.com

Ferrite flat pot magnet with clip



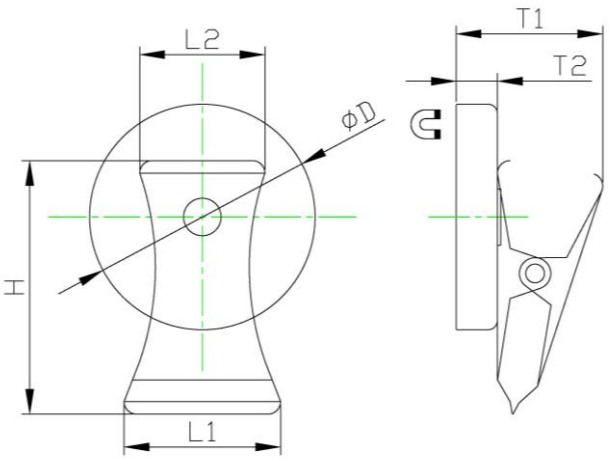

Item No.	D	H	L1	L2	T1	T2	Force			Weight
	mm	mm	mm	mm	mm	mm	Kg	N	Lbs	g
RBFB36C-S	36	40	25	20	23.5	6.6	7	66	15	40





Address: RM 808 BLD#4, 99 Shangwu Dadao, Huaqiao Kunshan Jiangsu 215332 China
Tel: +86 512 5035 7618 Email: sales6@weizhongmagnetics.com

Ferrite flat pot magnet with clip in different colors



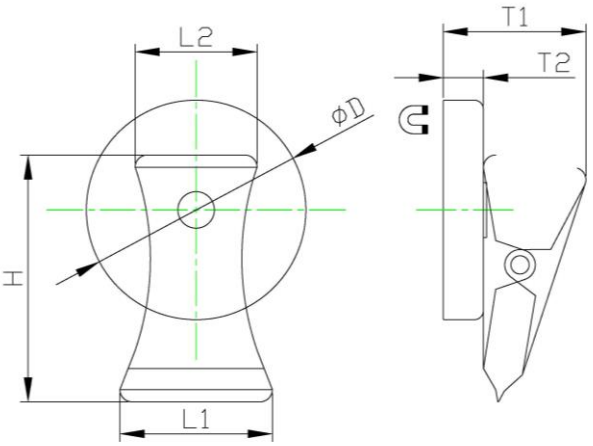

Item No.	D	H	L1	L2	T1	T2	Force			Weight	color
	mm	mm	mm	mm	mm	mm	Kg	N	Lbs	g	
RBFB36C-B	36	40	25	20	23.5	6.6	7	66	15	40	Black
RBFB36C-W	36	40	25	20	23.5	6.6	7	66	15	40	White
RBFB36C-R	36	40	25	20	23.5	6.6	7	66	15	40	Red
RBFB36C-Y	36	40	25	20	23.5	6.6	7	66	15	40	Yellow
RBFB36C-G	36	40	25	20	23.5	6.6	7	66	15	40	Green
RBFB36C-BL	36	40	25	20	23.5	6.6	7	66	15	40	Blue



Address: RM 808 BLD#4, 99 Shangwu Dadao, Huaqiao Kunshan Jiangsu 215332 China
Tel: +86 512 5035 7618 Email: sales6@weizhongmagnetics.com

NdFeB magnetic document holder

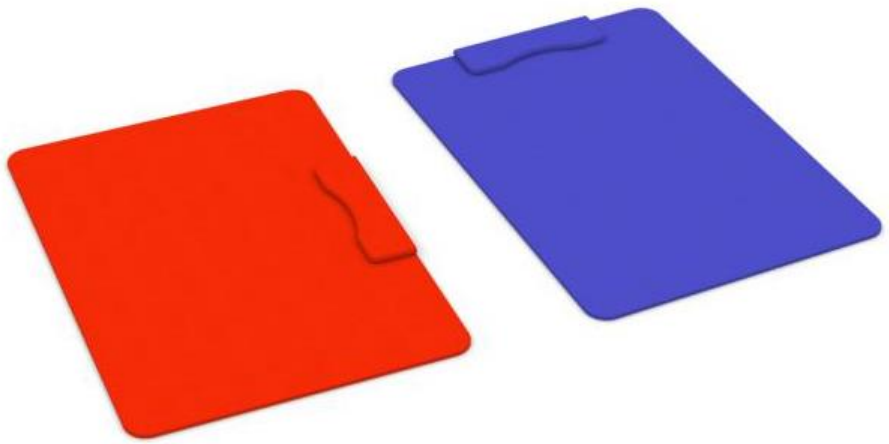

Item No.	Size	Orientation	Color
MG-3501BLH	A4	Landscape	Blue
MG-2501BH	A4	Landscape	Black
MG-3501BLV	A4	Portrait	Blue
MG-2501BV	A4	Portrait	Black

Note: Other colors are availalbe upon request





Address: RM 808 BLD#4, 99 Shangwu Dadao, Huaqiao Kunshan Jiangsu 215332 China
Tel: +86 512 5035 7618 Email: sales6@weizhongmagnetics.com

Magnetic foil with transparent sheet





Item No.	Size	Measurement	Opening
RML-A8W0.5mm	A8	99*66*0.5mm	upper side
RML-A6W0.5mm	A6	165*113*0.5mm	upper side
RML-A4W0.5mm	A4	314*224*0.5mm	upper and right-hand side
RML-A3W0.6mm	A3	438*314*0.6mm	upper and right-hand side





Address: RM 808 BLD#4, 99 Shangwu Dadao, Huaqiao Kunshan Jiangsu 215332 China
Tel: +86 512 5035 7618 Email: sales6@weizhongmagnetics.com

09 Accessories

As it is named, accessories are additional parts that are not essential, but they can be used with or added to pot magnets, channel magnets, rubber coated magnets etc. in order to make it more efficient, useful or convenient to use.



Address: RM 808 BLD#4, 99 Shangwu Dadao, Huaqiao Kunshan Jiangsu 215332 China
Tel: +86 512 5035 7618 Email: sales6@weizhongmagnetics.com

Rubber boot for ferrite pot magnet



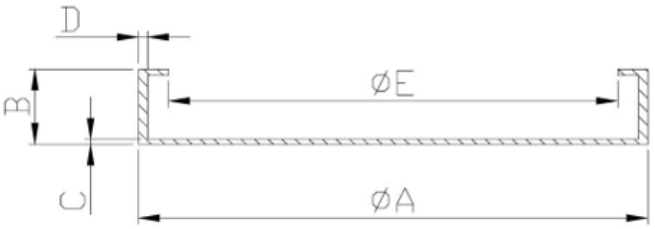

Item No.	A	B	C	D	E	Weight
	mm	mm	mm	mm	mm	g
RCF-21	33.4	6.5	0.8	1.27	23.88	2.1
RCF-41	38.6	8.0	0.9	1.27	30.73	3.6
RCF-51	53.6	9.2	0.9	1.27	43.70	4.2
RCF-61	63.5	10.8	0.9	1.5	53.34	7.8
RCF-71	70.0	11.0	0.9	1.5	61.60	8.5
RCF-81	84.3	12.5	0.8	1.5	73.66	12.0



Address: RM 808 BLD#4, 99 Shangwu Dadao, Huaqiao Kunshan Jiangsu 215332 China
Tel: +86 512 5035 7618 Email: sales6@weizhongmagnetics.com

Rubber boots for NdFeB pot magnets



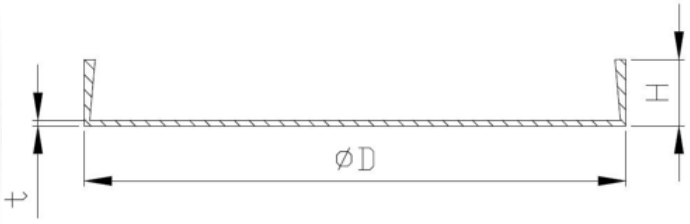

Item No.	D	t	H	Weight
	mm	mm	mm	g
RCN-11	11	0.5	3	0.16
RCN-14	14	0.5	3	0.2
RCN-17	17	0.5	3	0.3
RCN-21	21	0.5	5	0.5
RCN-26	26	0.5	5	0.7
RCN-33	33	0.5	5	1.0
RCN-41	41	0.5	6	1.6
RCN-49	49	0.5	6	2.0
RCN-51	51	0.5	6	2.2
RCN-61	61	0.5	6	3.0
RCN-64	64	0.5	6	3.5

Address: RM 808 BLD#4, 99 Shangwu Dadao, Huaqiao Kunshan Jiangsu 215332 China
Tel: +86 512 5035 7618 Email: sales6@weizhongmagnetics.com

Steel plate



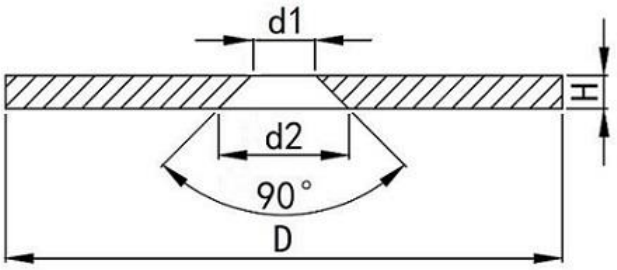

Item No.	D	d1	d2	H	Coating	Weight
	mm	mm	mm	mm		g
SDC-12	12	5.5	8.5	1.5	Ni	0.5
SDC-15	15	5.5	8.8	1.5	Ni	1.2
SDC-18	18	5.5	8.5	1.5	Ni	2.5
SDC-23	23	5.5	8.5	1.5	Ni	4
SDC-27	27	5.7	11.7	3	Ni	12
SDC-34	34	5.7	11.7	3	Ni	19
SDC-42	42	5.7	11.7	3	Ni	31
SDC-50	50	5.7	11.7	3	Ni	44
SDC-52	52	5.7	11.7	3	Ni	49
SDC-62	62	5.7	11.7	3	Ni	69

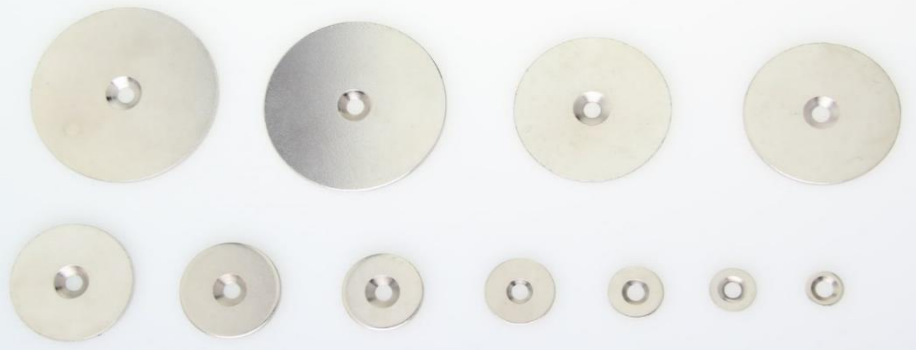

Address: RM 808 BLD#4, 99 Shangwu Dadao, Huaqiao Kunshan Jiangsu 215332 China
Tel: +86 512 5035 7618 Email: sales6@weizhongmagnetics.com

Hook and eyebolt



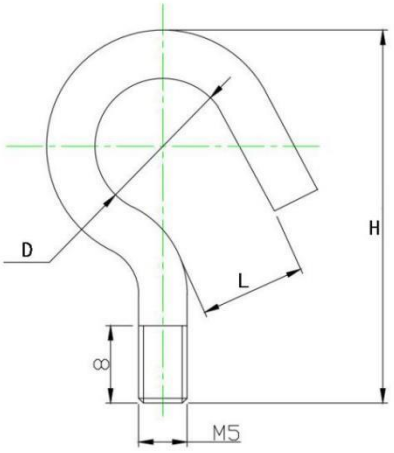

Item No.	D	L	H
	mm	mm	mm
M3 Hook	4	3	20
M4 Hook	5.5	4.5	22.5
M5 Hook	14	11	38.5
M6 Hook	26	19	50
M8 Hook	23	17	53
M4 Eyebolt	4.5	/	22.5
M5 Eyebolt	11	/	38.5
M6 Eyebolt	19	/	50



Address: RM 808 BLD#4, 99 Shangwu Dadao, Huaqiao Kunshan Jiangsu 215332 China
Tel: +86 512 5035 7618 Email: sales6@weizhongmagnetics.com

10 Magnetic latches

Magnetic latches provide diverse installation options and they are a perfect replacement of the standard latch hardware on doors, for a cleaner look and smoother operation.

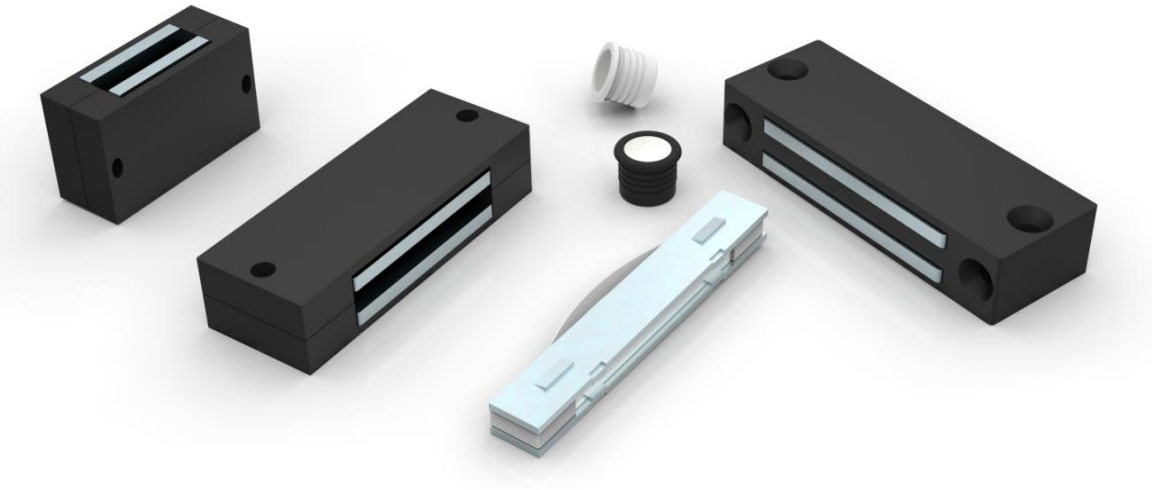

Address: RM 808 BLD#4, 99 Shangwu Dadao, Huaqiao Kunshan Jiangsu 215332 China
Tel: +86 512 5035 7618 Email: sales6@weizhongmagnetics.com

Magnetic latch



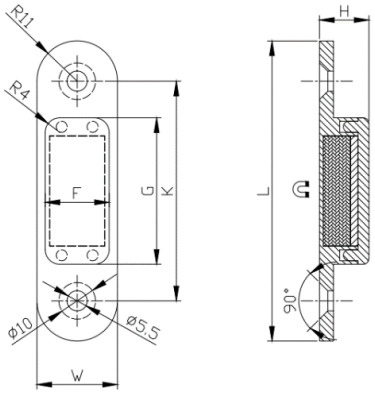

Item No	L	W	H	K	G	F	/	Force			Weight
	mm	mm	mm	mm	mm	mm		Lbs	Kg	N	g
PCNL82C-N	82	22	13.5	60	40	17.5	N	15.4	7	68	41.1
PCNL82C-W-N	82	22	13.5	60	40	17.5	N	15.4	7	68	41.1
PCNL82C-S	82	22	13.5	60	40	17.5	S	15.4	7	68	41.1
PCNL82C-W-S	82	22	13.5	60	40	17.5	S	15.4	7	68	41.1



Address: RM 808 BLD#4, 99 Shangwu Dadao, Huaqiao Kunshan Jiangsu 215332 China
Tel: +86 512 5035 7618 Email: sales6@weizhongmagnetics.com

Double sided magnetic latch



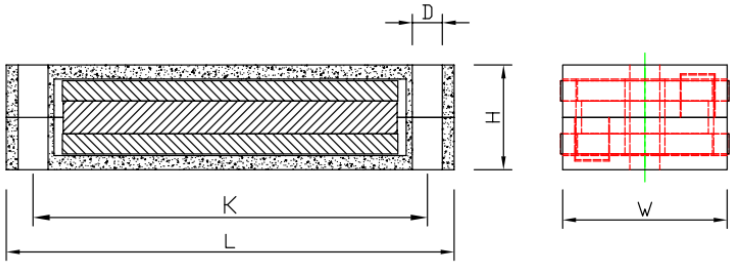

Item No	L	W	H	K	D	Force			Weight
	mm	mm	mm	mm	mm	Lbs	Kg	N	g
32735	42	25	16	33.5	4.5	15.4	8.1	80	47
32736	67	24.6	15.6	59	4.5	33.7	15.3	150	89.4



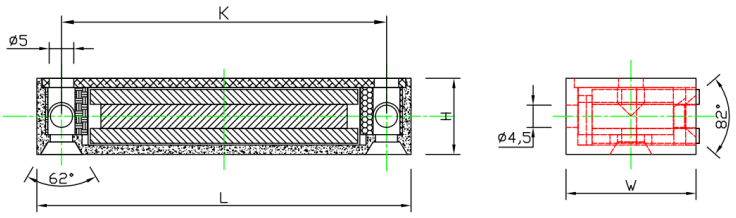

Item No	L	W	H	K	Force			Weight
	mm	mm	mm	mm	Lbs	Kg	N	g
32739	76	26.4	15.4	66	45	20.4	200	86.7

Address: RM 808 BLD#4, 99 Shangwu Dadao, Huaqiao Kunshan Jiangsu 215332 China
Tel: +86 512 5035 7618 Email: sales6@weizhongmagnetics.com

Round magnetic latch



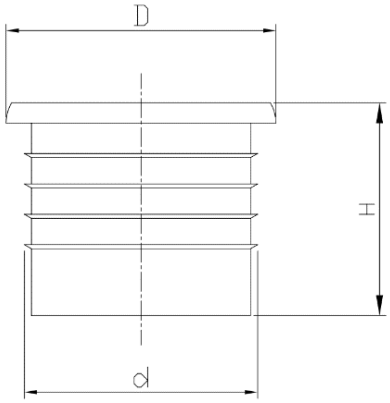

Item No	D	d	H	Force			Weight
	mm	mm	mm	Lbs	Kg	N	g
H-0050-1BK	13.5	11.75	10.5	4.5	2	20	4.2
H-0050-2W	13.5	11.75	10.5	4.5	2	20	4.2
H-0028-1BK	9.6	8.5	9.6	2.2	1	10	1.4
H-0028-1W	9.6	8.5	9.6	2.2	1	10	1.4





Address: RM 808 BLD#4, 99 Shangwu Dadao, Huaqiao Kunshan Jiangsu 215332 China
Tel: +86 512 5035 7618 Email: sales6@weizhongmagnetics.com

Steel cased magnetic latch

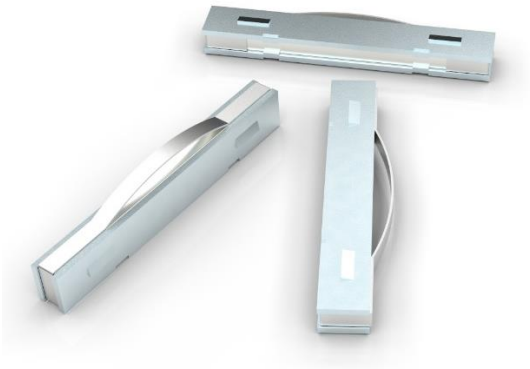

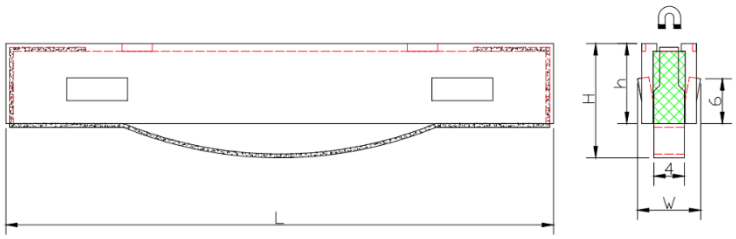

Item No	L	W	H	h	Force			Weight
	mm	mm	mm	mm	Lbs	Kg	N	g
SWNL70-1S	72	8.3	15	10.5	78.6	35.7	350	39.2





Address: RM 808 BLD#4, 99 Shangwu Dadao, Huaqiao Kunshan Jiangsu 215332 China
Tel: +86 512 5035 7618 Email: sales6@weizhongmagnetics.com



How to contact us:

Company: **Weizhong Magnetics Co.,Ltd**
Address: RM 808 BLD#4, 99 Shangwu Dadao,
Huaqiao Kunshan Jiangsu 215332 China
Tel: +86-512-50357618
Web: www.weizhongmagnetics.com
E-mail: sales6@weizhongmagnetics.com