SCREWTECH®

LINEAR MOTION SYSTEMS & SOLUTIONS

LINEAR ACTUATOR GTHA

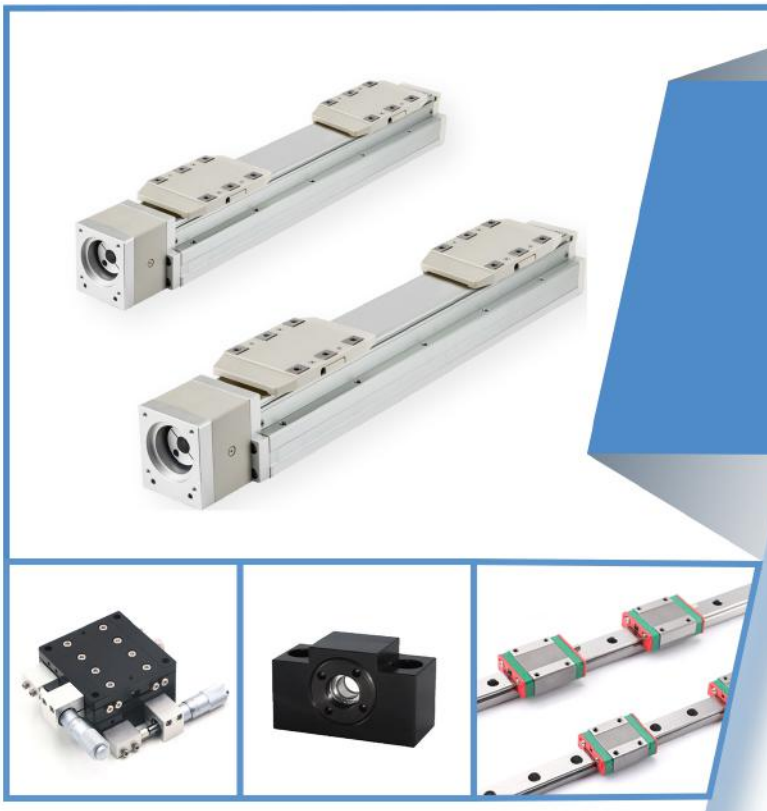

PRODUCT MANUAL

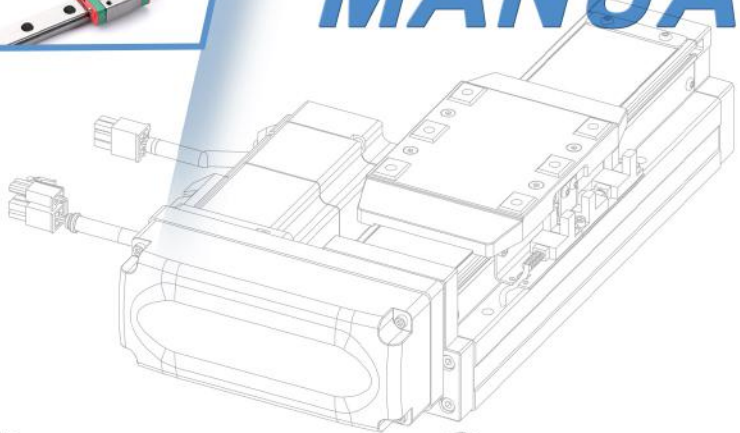

SCREW TECHNOLOGY CO.,LTD.

Transmission parts and supporting mechanical parts.
Linear transmission components, such as single-axis and multi-axis components.
Motors, controllers, sensors, encoders, etc.
Design, assembly and debugging of non-standard automation equipment, etc.

- Professional Customization
- Precision Machining
- High Quality Assurance

SMALL

GTHA4



Width：44mm
Max. stroke：800mm
Max. payload：25kg

P6

SMALL

GTHA5



Width：54mm
Max. stroke：800mm
Max. payload：30kg

P14

MEDIUM

GTHA8



Width：82mm
Max. stroke：1100mm
Max. payload：50kg

P18

LARGE

GTHA12



Width：120mm
Max. stroke：1250mm
Max. payload：110kg

P26

SMALL

GTHA5S



Width：54mm
Max. stroke：325mm
Max. payload：30kg

P30

SMALL

GTHA8S



Width：82mm
Max. stroke：450mm
Max. payload：50kg

P34

Built-in Electric Module GTHA
Linear Module

Spec Inde

GTHA Built-in LM Guide Electric Actuator - Slider Type

Environment	Driven Mode	Model	Motor Output (W)	Width(mm)	Repeatability (mm)	Ball Screw Spec（C7）		Maximum Payload(kg)		Maximum Speed (mm/s)
						Outer Diameter (mm)	Lead(mm)	Horizontal	Vertical	
Standard	Ball Screw	GTHA4	50W	44	±0.01	10	2	25	8	100
							6	20	5	300
							12	12	2	600
			100W				2	25	8	100
							6	20	8	300
							12	12	3.5	600
		GTHA5	100W	54	±0.01	12	2	30	10	100
							5	30	10	250
							10	15	5	500
							20	10	2.5	1000
		GTHA8	200W	82	±0.01	16	5	50	15	250
							10	30	8	500
			400W				20	18	3	1000
		GTHA12	400W	120	±0.01	16	5	110	33	250
							10	88	22	500
							20	40	10	1000
							32	30	8	1600

Dual Carriage Synchronous Movement In Reverse Direction

Environment	Driven Mode	Model	Motor Output (W)	Width(mm)	Repeatability (mm)	Ball Screw Spec（C7）		Maximum Payload(kg) M		Maximum Speed (mm/s)
						Outer Diameter (mm)	Lead(mm)	Horizontal	Vertical	
Standard	Ball Screw	GTHA5S	100W	54	±0.01	12	2	30	10	100
		GTHA8S	200W	82	±0.01	16	5	50	15	250
			400W							

Stroke(mm) & Maximum Speed(mm/s) Speed

Stroke	50	100	150	200	250	300	350	400	450	500	550	600	650	700	750	800	850	900	950	1000	1050	1100	1150	1200	1250	1300	1350	Page
						100						90	80	70	60	50												
						300						270	240	210	180	150												
						600						540	480	420	360	300												
						100						90	80	70	60	50												
						300						270	240	210	180	150												
						600						540	480	420	360	300												
							100						90	80	70	60												
							250						270	200	175	150												
							500						450	400	350	300												
							1000						900	800	700	600												
								250								225	200	175	150	125	100	75						
								500								450	400	350	300	250	200	150						
								1000								900	800	700	600	500	400	300						
									250								225	200	175	167	158	150	133	125	117			
									500								450	400	350	333	317	300	267	250	233			
									1000								900	800	700	667	633	600	533	500	467			
									1600								1440	1280	1120	1067	1013	900	853	800	747			

Stroke(mm) & Maximum Speed(mm/s) Speed

	25	50	75	100	125	150	175	200	225	250	275	300	325	350	375	400	425	450	475	500	525	550	575	600	625	650	675	Page
							100																					
										250																		

Built-in Electric Module GTHA
Linear Module



Max. Stroke	800mm	Max. Speed	600mm/s	Motor Output	50W	Ball Screw	ϕ10mm

GTHA4 - L2 - 100 - BC - M05B - C4 - 0001

Model

Stroke

50-800mm
50mm Pitch

Customization Order No.

Ball Screw Lead

2	2mm
6	6mm
12	12mm

Motor Position

BC	Motor Exposed
BM	Motor Bottom Side
BL	Motor Left Side
BR	Motor Right Side

Motor Brand、Power Output

M	Mitsubishi	05	50W	B
P	Panasonic	10	-	
Y	Yaskawa	20	-	
T	Delta	40	-	
If No Brake, No Descripition				

Home Sensor

Outside	
C	Motor Side
D	Opposite Motor Side
NO SENSOR	
E	No Sensor

When the stroke is 50mm, the sensor installation has the following resrtictions:
1. Home sensor and limit sensor has to installed on the different side or body.
2. Both Sides of slider need to install the sensor trigger device.

Limit Sensor

Outside	
3	1 Pc
4	2 Pc
NO SENSOR	
5	No Sensor

Specification

Spec	Repeatability (mm)		±0.01		
	Ball Screw Lead (mm)		2	6	12
	Max. Speed (mm/s)		100	300	600
	Max. Payload	Horizontal (kg)	25	20	12
		Vertical (kg)	8	5	2
	Rated Thrust (N)		424	141	71
	Stroke/Pitch (mm)		50-800m/50mm Pitch		
Parts	AC Servo Motor Ouput (W)		50		
	Ball Screw ∅ (mm)		C7ϕ10		
	Coupling (mm)		7x8		
	Home Sensor	Outside	EE-SX674(NPN)		

Sensor Layout

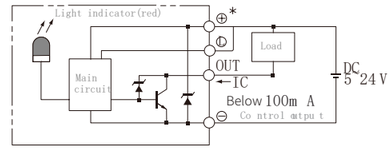

Allowable Moment

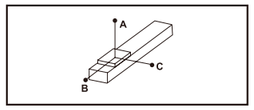

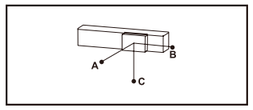

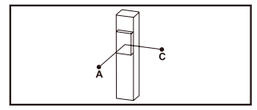

Horizontal Installation		A	B	C
Lead 2	12kg	1000	55	80
	18kg	750	35	50
	25kg	500	23	32
Lead 6	10kg	550	53	70
	15kg	350	32	45
	20kg	250	22	31
Lead 12	8kg	305	59	75
	10kg	240	45	57
	12kg	195	37	47

Wall Installation		A	B	C
Lead 2	12kg	80	55	1000
	18kg	50	35	750
	25kg	32	23	500
Lead 6	10kg	70	53	550
	15kg	45	32	350
	20kg	31	22	250
Lead 12	8kg	75	59	305
	10kg	57	45	240
	12kg	47	37	195

Vertical Installation		A	C
Lead 2	4kg	200	200
	8kg	100	100
	-	-	-
Lead 6	3kg	200	200
	5kg	120	120
	-	-	-
Lead 12	1.5kg	350	350
	2kg	260	260
	-	-	-

Static Loading Moment

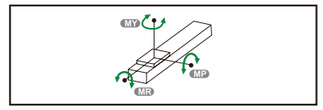

MY	79
MP	79
MR	116

The torque value in the chart indicate the center of gravity.
Operation life is 10,000km when the product is using under the specified conditions.
Data information is not for ceiling-mount inverse use.
Contact us for the details if you want to apply ceiling-mount inverse usage.

Suitable Motor Brand

Brand	Mark	Brake	Walt	AC-Voltage	Motor Model	Driver Model
Mitsubishi	M	No Brake (Horizontal Type)	50	220	HG-KR053	MR-J4-10A
		With Brake (Vertical Type)	50	220	HG-KR053B	MR-J4-10A
Panasonic	P	No Brake (Horizontal Type)	50	220	MSMD5A2G1U	MADHT1505
		With Brake (Vertical Type)	50	220	MSMD5A2G1V	MADHT1505
Delta	T	No Brake(Horizontal Type)	50	220	ECMA-C1040FES	ASD-B20121-B
		With Brake(Vertical Type)	50	220	ECMA-C1040FFS	ASD-B20121-B

Motor Exposed

Unit: mm

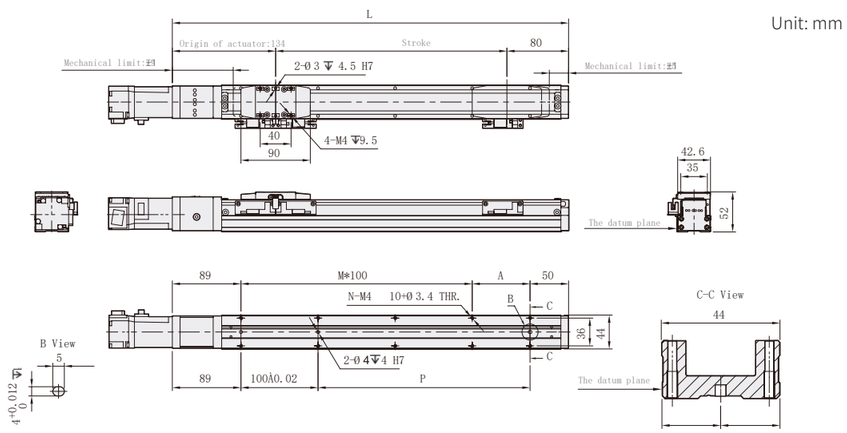

Stroke	50	100	150	200	250	300	350	400	450	500	550	600	650	700	750	800
L	264	314	364	414	464	514	564	614	664	714	764	814	864	914	964	1014
A	25	75	25	75	25	75	25	75	25	75	25	75	25	75	25	75
M	1	1	2	2	3	3	4	4	5	5	6	6	7	7	8	8
N	6	6	8	8	10	10	12	12	14	14	16	16	18	18	20	20
P	25	75	125	175	225	275	325	375	425	475	525	575	625	675	725	775
KG	0.95	1.12	1.29	1.47	1.65	1.83	2.01	2.19	2.37	2.55	2.73	2.91	3.09	3.27	3.45	3.63

Motor Bottom Side

Unit: mm

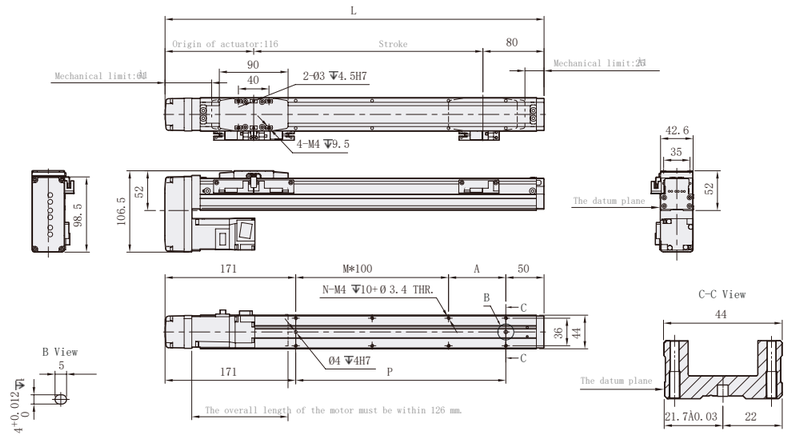

Stroke	50	100	150	200	250	300	350	400	450	500	550	600	650	700	750	800
L	246	296	346	396	446	496	546	596	646	696	746	796	846	896	946	996
A	25	75	25	75	25	75	25	75	25	75	25	75	25	75	25	75
M	1	1	2	2	3	3	4	4	5	5	6	6	7	7	8	8
N	6	6	8	8	10	10	12	12	14	14	16	16	18	18	20	20
P	25	75	125	175	225	275	325	375	425	475	525	575	625	675	725	775
KG	1.04	1.22	1.40	1.58	1.76	1.94	2.12	2.30	2.48	2.66	2.84	3.02	3.20	3.38	3.56	3.74

Motor Left Side

Unit: mm

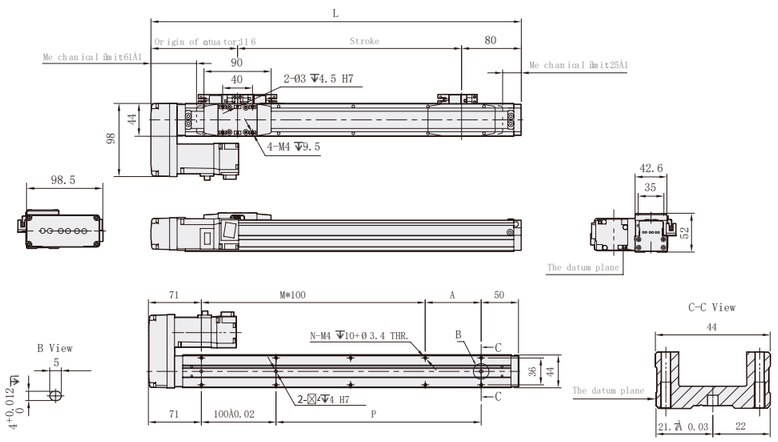

Stroke	50	100	150	200	250	300	350	400	450	500	550	600	650	700	750	800
L	246	296	346	396	446	496	546	596	646	696	746	796	846	896	946	996
A	25	75	25	75	25	75	25	75	25	75	25	75	25	75	25	75
M	1	1	2	2	3	3	4	4	5	5	6	6	7	7	8	8
N	6	6	8	8	10	10	12	12	14	14	16	16	18	18	20	20
P	25	75	125	175	225	275	325	375	425	475	525	575	625	675	725	775
KG	1.04	1.22	1.40	1.58	1.76	1.94	2.12	2.30	2.48	2.66	2.84	3.02	3.20	3.38	3.56	3.74

Motor Right Side

Unit: mm

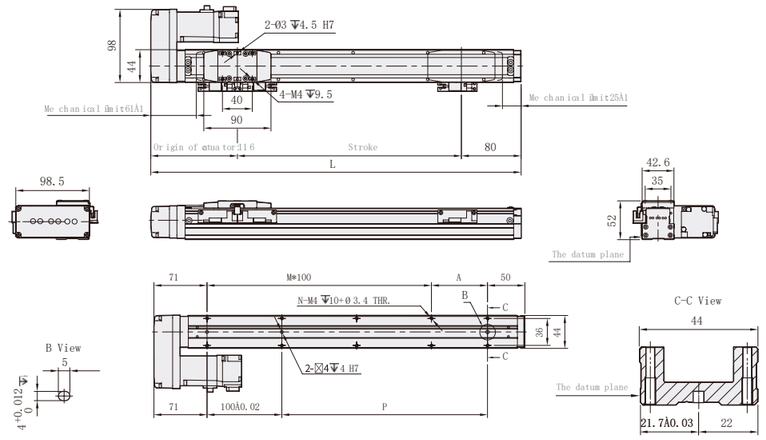

Stroke	50	100	150	200	250	300	350	400	450	500	550	600	650	700	750	800
L	246	296	346	396	446	496	546	596	646	696	746	796	846	896	946	996
A	25	75	25	75	25	75	25	75	25	75	25	75	25	75	25	75
M	1	1	2	2	3	3	4	4	5	5	6	6	7	7	8	8
N	6	6	8	8	10	10	12	12	14	14	16	16	18	18	20	20
P	25	75	125	175	225	275	325	375	425	475	525	575	625	675	725	775
KG	1.04	1.22	1.40	1.58	1.76	1.94	2.12	2.30	2.48	2.66	2.84	3.02	3.20	3.38	3.56	3.74

Built-in Electric Module GTHA
Linear Module



Max. Stroke	800mm

Max. Speed	600mm/s

Motor Output	100W

Ball Screw	ϕ10mm

GTHA4 - L2 - 100 - BC - M10B - C4 - 0001

Model

Stroke

50-800mm
50mm Pitch

Customization Order No.

Ball Screw Lead

2	2mm
6	6mm
12	12mm

Motor Position

BC	Motor Exposed
BM	Motor Bottom Side
BL	Motor Left Side
BR	Motor Right Side

Motor Brand、Power Output

M	Mitsubishi	05	-	B
P	Panasonic	10	100W	
Y	Yaskawa	20	-	
T	Delta	40	-	

If No Brake, No Descripition

Home Sensor

Outside	
C	Motor Side
D	Opposite Motor Side
NO SENSOR	
E	No Sensor

When the stroke is 50mm, the sensor installation has the following resrtictions:
1. Home sensor and limit sensor has to installed on the different side or body.
2. Both Sides of slider need to install the sensor trigger device.

Limit Sensor

Outside	
3	1 P c
4	2 P c
NO SENSOR	
5	No Sensor

Specification

Spec	Repeatability (mm)		±0.01		
	Ball Screw Lead (mm)		2	6	12
	Max. Speed (mm/s)		100	300	600
	Max. Payload	Horizontal (kg)	25	20	12
		Vertical (kg)	8	5	2
	Rated Thrust (N)		424	141	71
	Stroke/Pitch (mm)		50-800m/50mm Pitch		
Parts	AC Servo Motor Ouput (W)		100		
	Ball Screw ∅ (mm)		C7ϕ10		
	Coupling (mm)		7x8		
	Home Sensor	Outside	EE-SX674(NPN)		

Sensor Layout

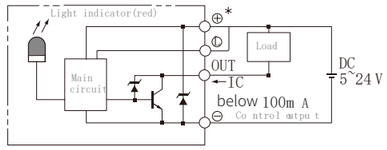

Allowable Moment

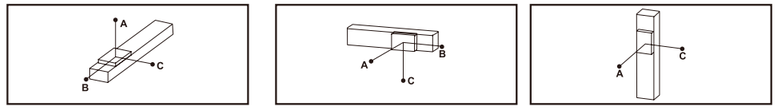

Horizontal Installation		A	B	C
Lead 2	12kg	1000	55	80
	18kg	750	35	50
	25kg	500	23	32
Lead 6	10kg	550	53	70
	15kg	350	32	45
	20kg	250	22	31
Lead 12	8kg	305	59	75
	10kg	240	45	57
	12kg	195	37	47

Wall Installation		A	B	C
Lead 2	12kg	80	55	1000
	18kg	50	35	750
	25kg	32	23	500
Lead 6	10kg	70	53	550
	15kg	45	32	350
	20kg	31	22	250
Lead 12	8kg	75	59	305
	10kg	57	45	240
	12kg	47	37	195

Vertical Installation		A	C
Lead 2	4kg	195	195
	8kg	100	100
	-	-	-
Lead 6	4kg	150	150
	8kg	75	75
	-	-	-
Lead 12	2kg	260	260
	3.5kg	150	150
	-	-	-

Static Loading Moment

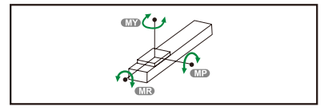

MY	79
MP	79
MR	116

The torque value in the chart indicate the center of gravity.
Operation life is 10,000km when the product is using under the specified conditions.
Data information is not for ceiling-mount inverse use.
Contact us for the details if you want to apply ceiling-mount inverse usage.

Suitable Motor Brand

Brand	Mark	Brake	Walt	AC-Voltage	Motor Model	Driver Model
Mitsubishi	M	No Brake (Horizontal Type)	100	220	HG-KR13	MR-J4-10A
		With Brake (Vertical Type)	100	220	HG-KR13B	MR-J4-10A
Panasonic	P	No Brake (Horizontal Type)	100	220	MSMD012G1U	MADHT1505
		With Brake (Vertical Type)	100	220	MSMD012G1V	MADHT1505
Delta	T	No Brake(Horizontal Type)	100	220	ECMA-C20401ES	ASD-B20121-B
		With Brake(Vertical Type)	100	220	ECMA-C20401FS	ASD-B20121-B

Motor Exposed

Unit: mm

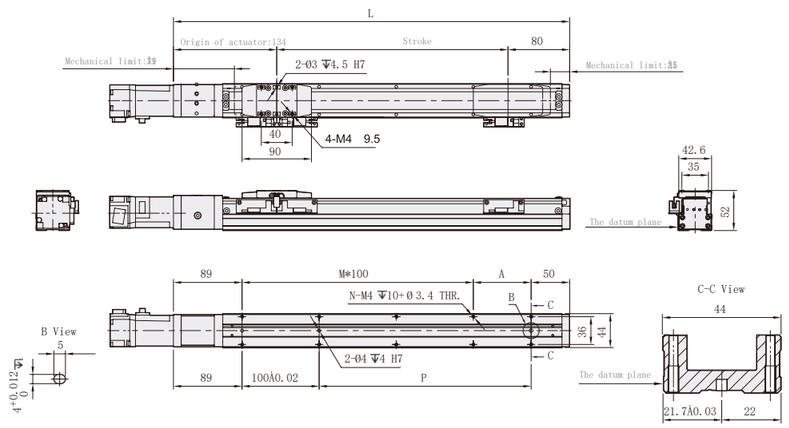

Stroke	50	100	150	200	250	300	350	400	450	500	550	600	650	700	750	800
L	264	314	364	414	464	514	564	614	664	714	764	814	864	914	964	1014
A	25	75	25	75	25	75	25	75	25	75	25	75	25	75	25	75
M	1	1	2	2	3	3	4	4	5	5	6	6	7	7	8	8
N	6	6	8	8	10	10	12	12	14	14	16	16	18	18	20	20
P	25	75	125	175	225	275	325	375	425	475	525	575	625	675	725	775
KG	0.95	1.12	1.29	1.47	1.65	1.83	2.01	2.19	2.37	2.55	2.73	2.91	3.09	3.27	3.45	3.63

Motor Bottom Side

Unit: mm

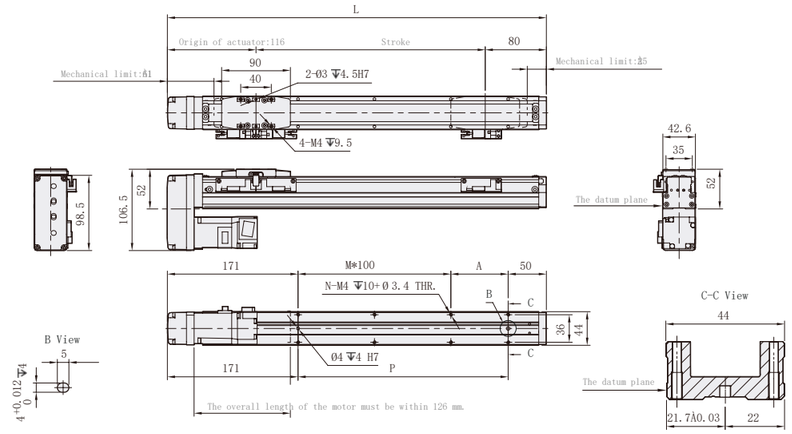

Stroke	50	100	150	200	250	300	350	400	450	500	550	600	650	700	750	800
L	246	296	346	396	446	496	546	596	646	696	746	796	846	896	946	996
A	25	75	25	75	25	75	25	75	25	75	25	75	25	75	25	75
M	1	1	2	2	3	3	4	4	5	5	6	6	7	7	8	8
N	6	6	8	8	10	10	12	12	14	14	16	16	18	18	20	20
P	25	75	125	175	225	275	325	375	425	475	525	575	625	675	725	775
KG	1.04	1.22	1.40	1.58	1.76	1.94	2.12	2.30	2.48	2.66	2.84	3.02	3.20	3.38	3.56	3.74

Motor Left Side

Unit: mm

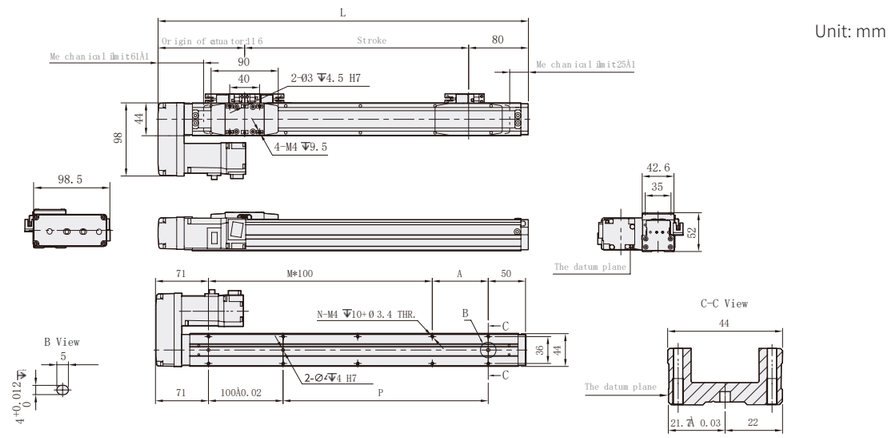

Stroke	50	100	150	200	250	300	350	400	450	500	550	600	650	700	750	800
L	246	296	346	396	446	496	546	596	646	696	746	796	846	896	946	996
A	25	75	25	75	25	75	25	75	25	75	25	75	25	75	25	75
M	1	1	2	2	3	3	4	4	5	5	6	6	7	7	8	8
N	6	6	8	8	10	10	12	12	14	14	16	16	18	18	20	20
P	25	75	125	175	225	275	325	375	425	475	525	575	625	675	725	775
KG	1.04	1.22	1.40	1.58	1.76	1.94	2.12	2.30	2.48	2.66	2.84	3.02	3.20	3.38	3.56	3.74

Motor Right Side

Unit: mm

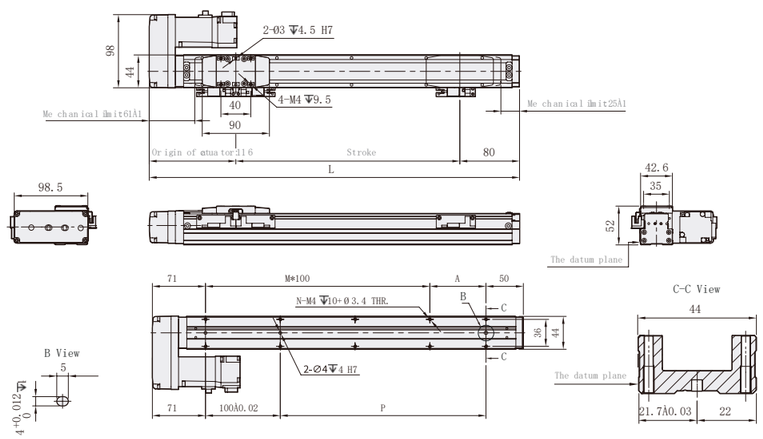

Stroke	50	100	150	200	250	300	350	400	450	500	550	600	650	700	750	800
L	246	296	346	396	446	496	546	596	646	696	746	796	846	896	946	996
A	25	75	25	75	25	75	25	75	25	75	25	75	25	75	25	75
M	1	1	2	2	3	3	4	4	5	5	6	6	7	7	8	8
N	6	6	8	8	10	10	12	12	14	14	16	16	18	18	20	20
P	25	75	125	175	225	275	325	375	425	475	525	575	625	675	725	775
KG	1.04	1.22	1.40	1.58	1.76	1.94	2.12	2.30	2.48	2.66	2.84	3.02	3.20	3.38	3.56	3.74

Built-in Electric Module GTHA
Linear Module



Max. Stroke	800mm

Max. Speed	1000mm/s

Motor Output	100W

Ball Screw	ϕ12mm

GTHA5 - L5 - 100 - BC - M10B - C4 - 0001

Model

Stroke

50-800mm
50mm Pitch

Customization Order No.

Ball Screw Lead

2	2mm
5	5mm
10	10mm
20	20mm

Motor Position

BC	Motor Exposed
BM	Motor Bottom Side
BL	Motor Left Side
BR	Motor Right Side

Motor Brand、Power Output

M	Mitsubishi	05	-	B
P	Panasonic	10	100W	
Y	Yaskawa	20	-	
T	Delta	40	-	
If No Brake, No Descripition				

Home Sensor

Outside	
C	Motor Side
D	Opposite Motor Side
NO SENSOR	
E	No Sensor

When the stroke is 50mm, the sensor installation has the following resrtictions:
1. Home sensor and limit sensor has to installed on the different side or body.
2. Both Sides of slider need to install the sensor trigger device.

Limit Sensor

Outside	
3	1 P c
4	2 P c
NO SENSOR	
5	No Sensor

Specification

Spec	Repeatability (mm)		±0.01			
	Ball Screw Lead (mm)		2	5	10	20
	Max. Speed (mm/s)		100	250	500	1000
	Max. Payload	Horizontal (kg)	30	30	15	10
		Vertical (kg)	10	10	5	2.5
	Rated Thrust (N)		854	341	170	85
	Stroke/Pitch (mm)		50-800m/50mm Pitch			
Parts	AC Servo Motor Ouput (W)		100			
	Ball Screw ∅ (mm)		C7ϕ12			
	Coupling (mm)		7x8			
	Home Sensor	Outside	EE-SX674(NPN)			

Sensor Layout

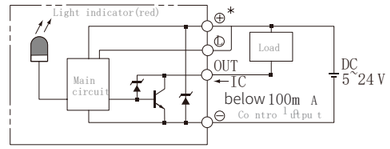

Allowable Moment

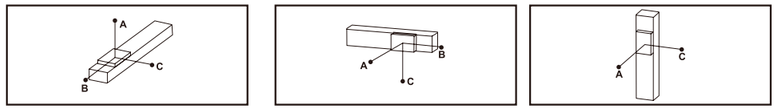

Static Loading Moment

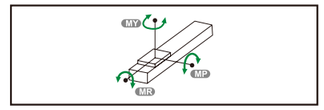

Horizontal Installation		A	B	C
Lead 2	10kg	900	100	135
	20kg	700	45	60
	30kg	550	25	35
Lead 5	10kg	650	75	100
	20kg	440	32	45
	30kg	270	19	25
Lead 10	5kg	600	145	185
	10kg	370	70	85
	15kg	250	42	52
Lead 20	5kg	320	120	130
	8kg	220	70	88
	10kg	175	55	60

Wall Installation		A	B	C
Lead 2	10kg	135	100	900
	20kg	60	45	700
	30kg	35	25	550
Lead 5	10kg	100	75	650
	20kg	45	32	440
	30kg	25	19	270
Lead 10	5kg	185	145	600
	10kg	85	70	370
	15kg	52	42	250
Lead 20	5kg	130	120	320
	8kg	88	70	220
	10kg	60	55	175

Vertical Installation		A	C
Lead 2	6kg	180	180
	8kg	135	135
	10kg	110	110
Lead 5	6kg	145	145
	8kg	110	110
	10kg	90	90
Lead 10	1kg	800	800
	3kg	260	260
	5kg	155	155
Lead 20	1kg	600	600
	2kg	300	300
	2.5kg	250	250

MY	103
MP	103
MR	144

力 The torque value in the chart indicate the center of gravity.
Operation life is 10,000km when the product is using under the specified conditions.
Data information is not for ceiling-mount inverse use. Contact us for the details if you want to apply ceiling-mount inverse usage.

Suitable Motor Brand

Brand	Mark	Brake	Walt	AC-Voltage	Motor Model	Driver Model
Mitsubishi	M	No Brake (Horizontal Type)	100	220	HG-KR13	MR-J4-10A
		With Brake (Vertical Type)	100	220	HG-KR13B	MR-J4-10A
Panasonic	P	No Brake (Horizontal Type)	100	220	MSMD012G1U	MADHT1505
		With Brake (Vertical Type)	100	220	MSMD012G1V	MADHT1505
Delta	T	No Brake(Horizontal Type)	100	220	ECMA-C20401ES	ASD-B20121-B
		With Brake(Vertical Type)	100	220	ECMA-C20401FS	ASD-B20121-B

Motor Exposed

Unit: mm

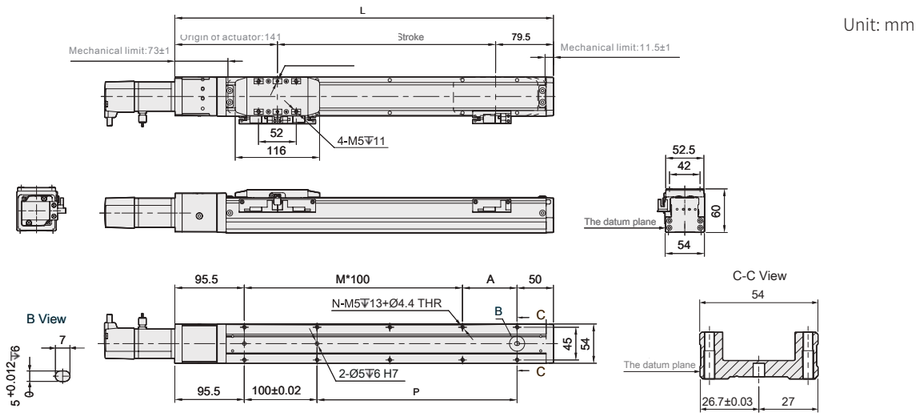

Stroke	50	100	150	200	250	300	350	400	450	500	550	600	650	700	750	800
L	270.5	320.5	370.5	420.5	470.5	520.5	570.5	620.5	670.5	720.5	770.5	820.5	870.5	920.5	970.5	1020.5
A	25	75	25	75	25	75	25	75	25	75	25	75	25	75	25	75
M	1	1	2	2	3	3	4	4	5	5	6	6	7	7	8	8
N	6	6	8	8	10	10	12	12	14	14	16	16	18	18	20	20
P	25	75	125	175	225	275	325	375	425	475	525	575	625	675	725	775
KG	1.65	1.79	1.92	2.11	2.39	2.50	2.52	2.75	2.86	2.95	3.15	3.28	3.44	3.58	3.71	4.09

Motor Bottom Side

Unit: mm

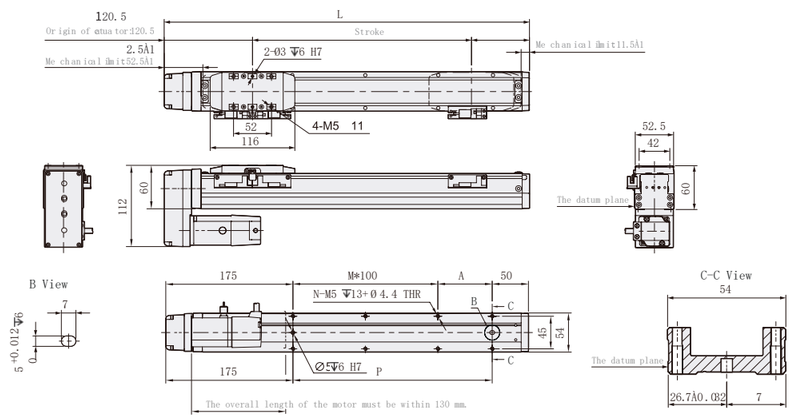

Stroke	50	100	150	200	250	300	350	400	450	500	550	600	650	700	750	800
L	250.5	300.5	350.5	400.5	450.5	500.5	550.5	600.5	650.5	700.5	750.5	800.5	850.5	900.5	950.5	100.5
A	25	75	25	75	25	75	25	75	25	75	25	75	25	75	25	75
M	0	0	1	1	2	2	3	3	4	4	5	5	6	6	7	7
N	4	4	6	6	8	8	10	10	12	12	14	14	16	16	18	18
P	25	75	125	175	225	275	325	375	425	475	525	575	625	675	725	775
KG	1.68	1.80	2.03	2.14	2.42	2.53	2.58	2.78	2.89	2.98	3.18	3.31	3.47	3.60	3.74	4.12

Motor Left Side

Unit: mm

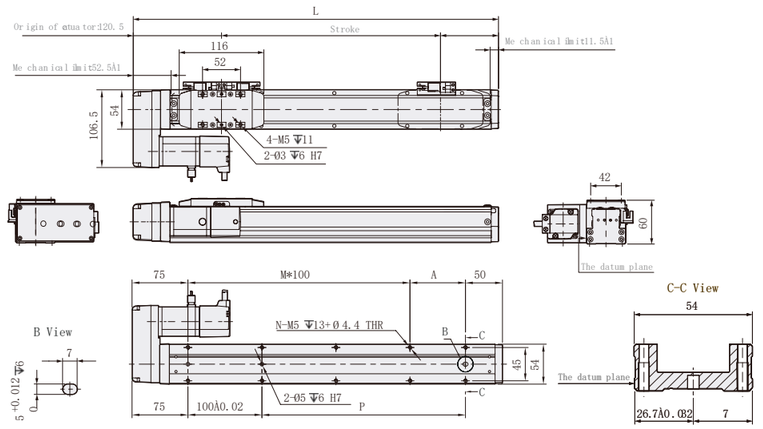

Stroke	50	100	150	200	250	300	350	400	450	500	550	600	650	700	750	800
L	250.5	300.5	350.5	400.5	450.5	500.5	550.5	600.5	650.5	700.5	750.5	800.5	850.5	900.5	950.5	100.5
A	25	75	25	75	25	75	25	75	25	75	25	75	25	75	25	75
M	0	0	1	1	2	2	3	3	4	4	5	5	6	6	7	7
N	4	4	6	6	8	8	10	10	12	12	14	14	16	16	18	18
P	25	75	125	175	225	275	325	375	425	475	525	575	625	675	725	775
KG	1.68	1.80	2.03	2.14	2.42	2.53	2.58	2.78	2.89	2.98	3.18	3.31	3.47	3.60	3.74	4.12

Motor Right Side

Unit: mm

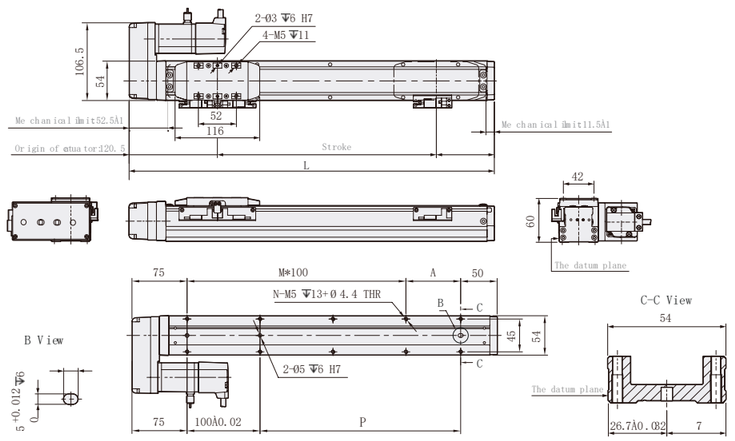

Stroke	50	100	150	200	250	300	350	400	450	500	550	600	650	700	750	800
L	250.5	300.5	350.5	400.5	450.5	500.5	550.5	600.5	650.5	700.5	750.5	800.5	850.5	900.5	950.5	100.5
A	25	75	25	75	25	75	25	75	25	75	25	75	25	75	25	75
M	0	0	1	1	2	2	3	3	4	4	5	5	6	6	7	7
N	4	4	6	6	8	8	10	10	12	12	14	14	16	16	18	18
P	25	75	125	175	225	275	325	375	425	475	525	575	625	675	725	775
KG	1.68	1.80	2.03	2.14	2.42	2.53	2.58	2.78	2.89	2.98	3.18	3.31	3.47	3.60	3.74	4.12

Built-in Electric Module GTHA
Linear Module



Max. Stroke	1100mm	Max. Speed	1000mm/s	Motor Output	200W	Ball Screw	ϕ16mm

GTHA8 - L10 - 100 - BC - M20B - C4 - 0001

Model

Stroke

50-1100mm
50mm Pitch

Customization Order No.

Ball Screw Lead

2	2mm
5	5mm
10	10mm
20	20mm

Motor Position

BC	Motor Exposed
BM	Motor Bottom Side
BL	Motor Left Side
BR	Motor Right Side

Motor Brand、Power Output

M	Mitsubishi	05	-	B
P	Panasonic	10	100W	
Y	Yaskawa	20	-	
T	Delta	40	-	
If No Brake, No Descripition				

Home Sensor

Outside	
C	Motor Side
D	Opposite Motor Side
NO SENSOR	
E	No Sensor

When the stroke is 50mm, the sensor installation has the following resrtictions:
1. Home sensor and limit sensor has to installed on the different side or body.
2. Both Sides of slider need to install the sensor trigger device.

Limit Sensor

Outside	
3	1 P c
4	2 P c
NO SENSOR	
5	No Sensor

Specification

Spec	Repeatability (mm)		±0.01		
	Ball Screw Lead (mm)		5	10	20
	Max. Speed (mm/s)		250	500	1000
	Max. Payload	Horizontal (kg)	50	30	18
		Vertical (kg)	15	8	3
	Rated Thrust (N)		683	341	174
	Stroke/Pitch (mm)		50-1100m/50 Pitch		
Parts	AC Servo Motor Ouput (W)		200		
	Ball Screw ∅ (mm)		C7ϕ16		
	Coupling (mm)		10x14/11		
	Home Sensor	Outside	EE-SX674(NPN)		

Sensor Layout

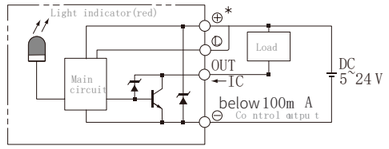

Allowable Moment

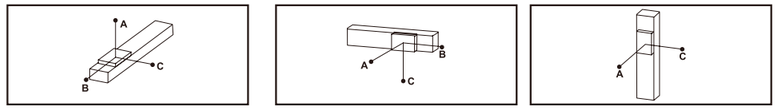

Static Loading Moment

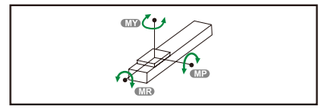

Horizontal Installation		A	B	C
Lead 5	20kg	1560	153	237
	35kg	890	81	126
	50kg	550	53	82
Lead 10	10kg	1730	286	412
	20kg	839	136	196
	30kg	541	86	124
Lead 20	6kg	1213	403	493
	9kg	800	264	323
	18kg	592	194	238

Wall Installation		A	B	C
Lead 5	20kg	214	153	1435
	35kg	113	81	845
	50kg	74	53	506
Lead 10	10kg	370	286	1400
	20kg	176	136	800
	30kg	112	86	495
Lead 20	6kg	444	403	760
	9kg	292	264	277
	18kg	214	194	544

Vertical Installation		A	C
Lead 5	10kg	331	331
	15kg	220	220
	-	-	-
Lead 10	5kg	589	589
	8kg	368	368
	-	-	-
Lead 20	3kg	935	935
	-	-	-
	-	-	-

MY	318
MP	318
MR	626

The torque value in the chart indicate the center of gravity.
Operation life is 10,000km when the product is using under the specified conditions.
Data information is not for ceiling-mount inverse use. Contact us for the details if you want to apply ceiling-mount inverse usage.

Suitable Motor Brand

Brand	Mark	Brake	Walt	AC-Voltage	Motor Model	Driver Model
Mitsubishi	M	No Brake (Horizontal Type)	200	220	HG-KR23	MR-J4-20A
		With Brake (Vertical Type)	200	220	HG-KR23B	MR-J4-20A
Panasonic	P	No Brake (Horizontal Type)	200	220	MSMD022G1U	MADHT1507
		With Brake (Vertical Type)	200	220	MSMD022G1V	MADHT1507
Delta	T	No Brake(Horizontal Type)	200	220	ECMA-C20601ES	ASD-B20221-B
		With Brake(Vertical Type)	200	220	ECMA-C20601FS	ASD-B20221-B

Motor Exposed

Unit: mm

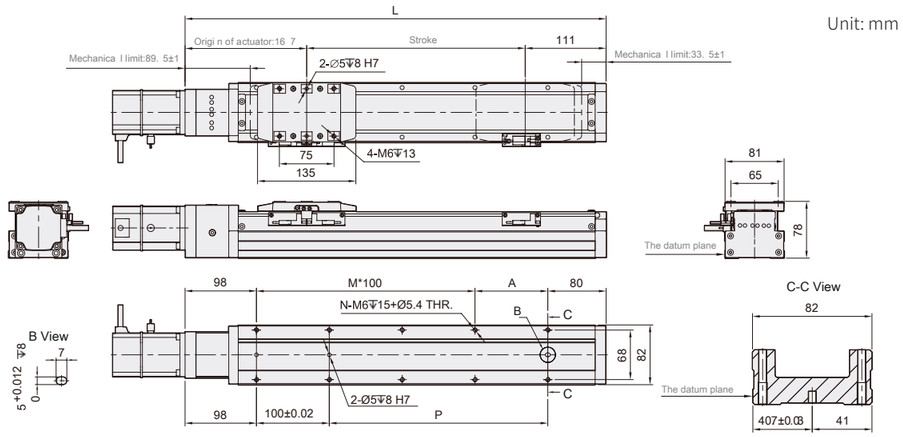

Stroke	50	100	150	200	250	300	350	400	450	500	550	600	650	700	750	800	850	900	950	1000	1050	1100
L	328	378	428	478	528	578	628	678	728	778	828	878	928	978	1028	1078	1128	1178	1228	1278	1328	1378
A	50	100	50	100	50	100	50	100	50	100	50	100	50	100	50	100	50	100	50	100	50	100
M	1	1	2	2	3	3	4	4	5	5	6	6	7	7	8	8	9	9	10	10	11	11
N	6	6	8	8	10	10	12	12	14	14	16	16	18	18	20	20	22	22	24	24	26	26
P	50	100	150	200	250	300	350	400	450	500	550	600	650	700	750	800	850	900	950	1000	1050	1100
KG	3.91	4.29	4.70	5.00	5.35	5.68	6.00	6.35	6.64	6.97	7.41	7.71	8.12	8.41	8.65	8.96	9.37	9.62	10.01	10.28	10.70	11.12

Motor Bottom Side

Unit: mm

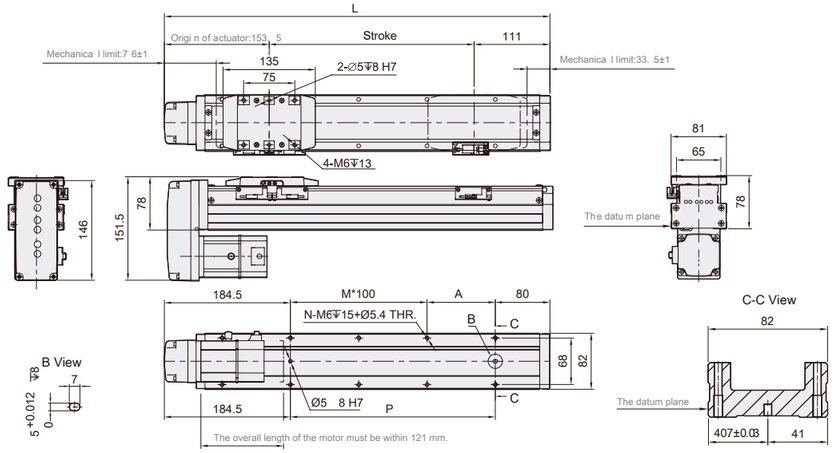

Stroke	50	100	150	200	250	300	350	400	450	500	550	600	650	700	750	800	850	900	950	1000	1050	1100
L	314.5	364.5	414.5	464.5	514.5	564.5	614.5	664.5	714.5	764.5	814.5	864.5	914.5	964.5	1014.5	1064.5	1114.5	1164.5	1214.5	1264.5	1314.5	1364.5
A	50	100	50	100	50	100	50	100	50	100	50	100	50	100	50	100	50	100	50	100	50	100
M	0	0	1	1	2	2	3	3	4	4	5	5	6	6	7	7	8	8	9	9	10	10
N	4	4	6	6	8	8	10	10	12	12	14	14	16	16	18	18	20	20	22	22	24	24
P	50	100	150	200	250	300	350	400	450	500	550	600	650	700	750	800	850	900	950	1000	1050	1100
KG	3.95	4.33	4.74	5.04	5.39	5.72	6.04	6.39	6.68	7.01	7.45	7.75	8.16	8.45	8.69	9.00	9.41	9.66	10.05	10.32	10.74	11.16

Motor Left Side

Unit: mm

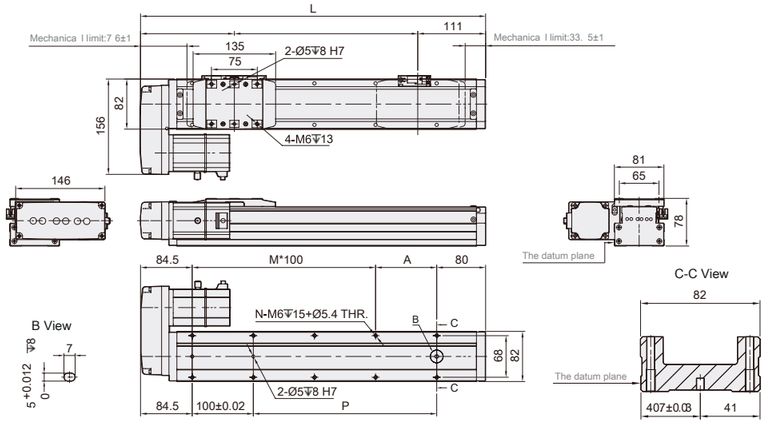

Stroke	50	100	150	200	250	300	350	400	450	500	550	600	650	700	750	800	850	900	950	1000	1050	1100
L	314.5	364.5	414.5	464.5	514.5	564.5	614.5	664.5	714.5	764.5	814.5	864.5	914.5	964.5	1014.5	1064.5	1114.5	1164.5	1214.5	1264.5	1314.5	1364.5
A	50	100	50	100	50	100	50	100	50	100	50	100	50	100	50	100	50	100	50	100	50	100
M	0	0	1	1	2	2	3	3	4	4	5	5	6	6	7	7	8	8	9	9	10	10
N	4	4	6	6	8	8	10	10	12	12	14	14	16	16	18	18	20	20	22	22	24	24
P	50	100	150	200	250	300	350	400	450	500	550	600	650	700	750	800	850	900	950	1000	1050	1100
KG	3.95	4.33	4.74	5.04	5.39	5.72	6.04	6.39	6.68	7.01	7.45	7.75	8.16	8.45	8.69	9.00	9.41	9.66	10.05	10.32	10.74	11.16

Motor Right Side

Unit: mm

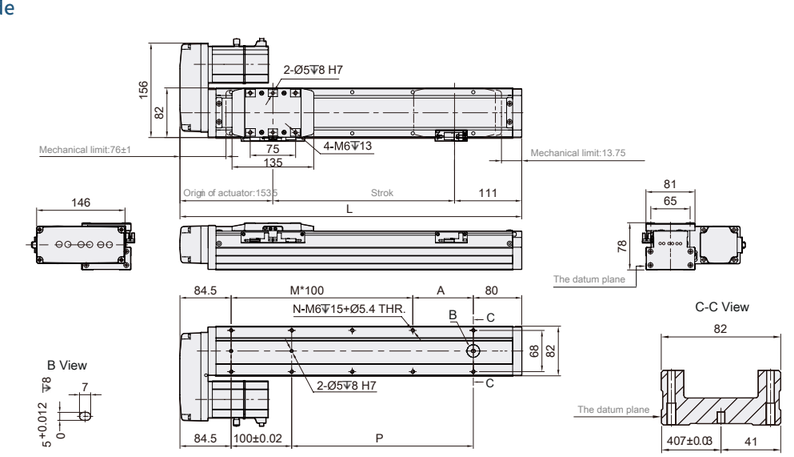

Stroke	50	100	150	200	250	300	350	400	450	500	550	600	650	700	750	800	850	900	950	1000	1050	1100
L	314.5	364.5	414.5	464.5	514.5	564.5	614.5	664.5	714.5	764.5	814.5	864.5	914.5	964.5	1014.5	1064.5	1114.5	1164.5	1214.5	1264.5	1314.5	1364.5
A	50	100	50	100	50	100	50	100	50	100	50	100	50	100	50	100	50	100	50	100	50	100
M	0	0	1	1	2	2	3	3	4	4	5	5	6	6	7	7	8	8	9	9	10	10
N	4	4	6	6	8	8	10	10	12	12	14	14	16	16	18	18	20	20	22	22	24	24
P	50	100	150	200	250	300	350	400	450	500	550	600	650	700	750	800	850	900	950	1000	1050	1100
KG	3.95	4.33	4.74	5.04	5.39	5.72	6.04	6.39	6.68	7.01	7.45	7.75	8.16	8.45	8.69	9.00	9.41	9.66	10.05	10.32	10.74	11.16

Built-in Electric Module GTHA
Linear Module



Max. Stroke	1100mm	Max. Speed	1000mm/s	Motor Output	400W	Ball Screw	ϕ16mm

GTHA8 - L10 - 100 - BC - M40B - C4 - 0001

Model

Stroke

50-1100mm
50mm Pitch

Customization Order No.

Ball Screw Lead

2	2mm
5	5mm
10	10mm
20	20mm

Motor Position

BC	Motor Exposed
BM	Motor Bottom Side
BL	Motor Left Side
BR	Motor Right Side

Motor Brand、Power Output

M	Mitsubishi	05	-	B
P	Panasonic	10	100W	
Y	Yaskawa	20	-	
T	Delta	40	-	
If No Brake, No Descripition				

Home Sensor

Outside	
C	Motor Side
D	Opposite Motor Side
NO SENSOR	
E	No Sensor

When the stroke is 50mm, the sensor installation has the following resrtictions:
1. Home sensor and limit sensor has to installed on the different side or body.
2. Both Sides of slider need to install the sensor trigger device.

Limit Sensor

Outside	
3	1 P c
4	2 P c
NO SENSOR	
5	No Sensor

Specification

Spec	Repeatability (mm)		±0.01		
	Ball Screw Lead (mm)		5	10	20
	Max. Speed (mm/s)		250	500	1000
	Max. Payload	Horizontal (kg)	50	30	18
		Vertical (kg)	15	8	3
	Rated Thrust (N)		1388	694	347
	Stroke/Pitch (mm)		50-1100m/50 Pitch		
Parts	AC Servo Motor Ouput (W)		400		
	Ball Screw ∅ (mm)		C7ϕ16		
	Coupling (mm)		10x14		
	Home Sensor	Outside	EE-SX674(NPN)		

Sensor Layout

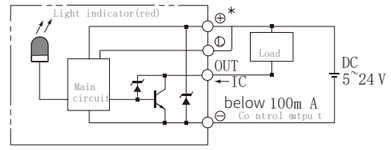

Allowable Moment

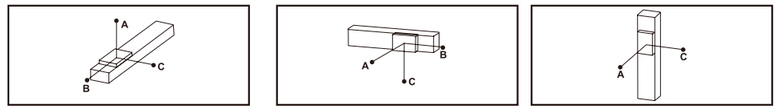

Horizontal Installation		A	B	C
Lead 5	20kg	1560	153	237
	35kg	890	81	126
	50kg	550	53	82
Lead 10	10kg	1730	286	412
	20kg	839	136	196
	30kg	541	86	124
Lead 20	6kg	1213	403	493
	9kg	800	264	323
	18kg	592	194	238

Wall Installation		A	B	C
Lead 5	20kg	214	153	1435
	35kg	113	81	845
	50kg	74	53	506
Lead 10	10kg	370	286	1400
	20kg	176	136	800
	30kg	112	86	495
Lead 20	6kg	444	403	760
	9kg	292	264	277
	18kg	214	194	544

Vertical Installation		A	C
Lead 5	10kg	331	331
	15kg	220	220
	-	-	-
Lead 10	5kg	589	589
	8kg	368	368
	-	-	-
Lead 20	3kg	935	935
	-	-	-
	-	-	-

Static Loading Moment

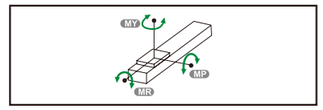

MY	318
MP	318
MR	626

The torque value in the chart indicate the center of gravity.
Operation life is 10,000km when the product is using under the specified conditions.
Data information is not for ceiling-mount inverse use.
Contact us for the details if you want to apply ceiling-mount inverse usage.

Suitable Motor Brand

Brand	Mark	Brake	Walt	AC-Voltage	Motor Model	Driver Model
Mitsubishi	M	No Brake (Horizontal Type)	400	220	HG-KR43	MR-J4-40A
		With Brake (Vertical Type)	400	220	HG-KR43B	MR-J4-40A
Panasonic	P	No Brake (Horizontal Type)	400	220	MSMD042G1U	MADHT2510
		With Brake (Vertical Type)	400	220	MSMD042G1V	MADHT2510
Delta	T	No Brake(Horizontal Type)	400	220	ECMA-C20604ES	ASD-B20421-B
		With Brake(Vertical Type)	400	220	ECMA-C20604FS	ASD-B20421-B

Motor Exposed

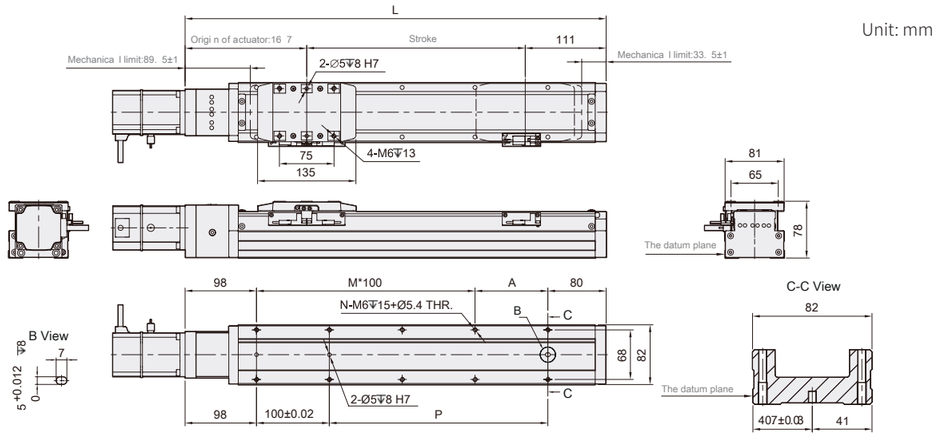

Unit: mm

Stroke	50	100	150	200	250	300	350	400	450	500	550	600	650	700	750	800	850	900	950	1000	1050	1100
L	328	378	428	478	528	578	628	678	728	778	828	878	928	978	1028	1078	1128	1178	1228	1278	1328	1378
A	50	100	50	100	50	100	50	100	50	100	50	100	50	100	50	100	50	100	50	100	50	100
M	1	1	2	2	3	3	4	4	5	5	6	6	7	7	8	8	9	9	10	10	11	11
N	6	6	8	8	10	10	12	12	14	14	16	16	18	18	20	20	22	22	24	24	26	26
P	50	100	150	200	250	300	350	400	450	500	550	600	650	700	750	800	850	900	950	1000	1050	1100
KG	3.91	4.29	4.70	5.00	5.35	5.68	6.00	6.35	6.64	6.97	7.41	7.71	8.12	8.41	8.65	8.96	9.37	9.62	10.01	10.28	10.70	11.12

Motor Bottom Side

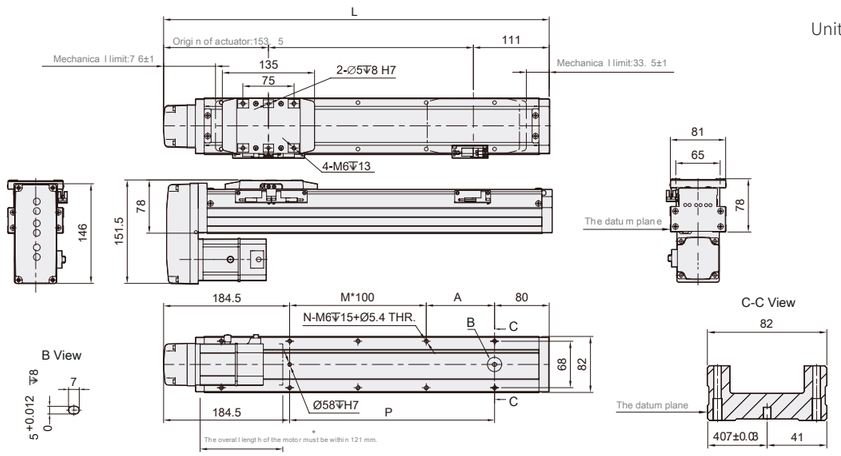

Unit: mm

Stroke	50	100	150	200	250	300	350	400	450	500	550	600	650	700	750	800	850	900	950	1000	1050	1100
L	314.5	364.5	414.5	464.5	514.5	564.5	614.5	664.5	714.5	764.5	814.5	864.5	914.5	964.5	1014.5	1064.5	1114.5	1164.5	1214.5	1264.5	1314.5	1364.5
A	50	100	50	100	50	100	50	100	50	100	50	100	50	100	50	100	50	100	50	100	50	100
M	0	0	1	1	2	2	3	3	4	4	5	5	6	6	7	7	8	8	9	9	10	10
N	4	4	6	6	8	8	10	10	12	12	14	14	16	16	18	18	20	20	22	22	24	24
P	50	100	150	200	250	300	350	400	450	500	550	600	650	700	750	800	850	900	950	1000	1050	1100
KG	3.95	4.33	4.74	5.04	5.39	5.72	6.04	6.39	6.68	7.01	7.45	7.75	8.16	8.45	8.69	9.00	9.41	9.66	10.05	10.32	10.74	11.16

Motor Left Side

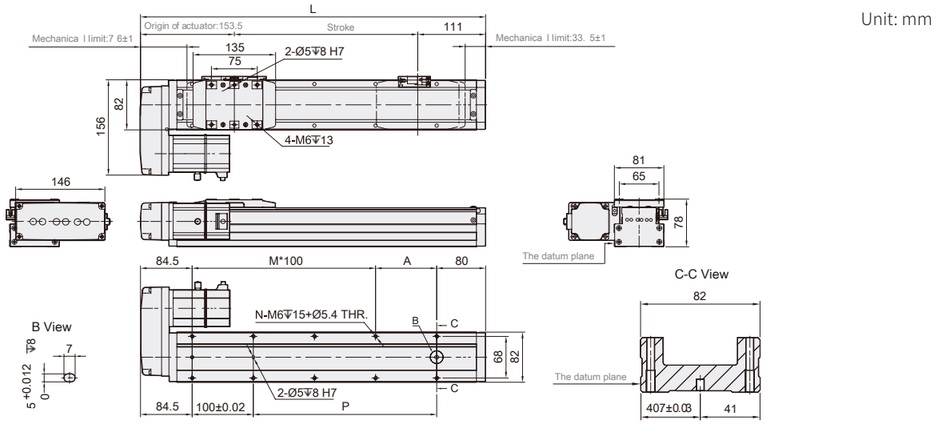

Unit: mm

Stroke	50	100	150	200	250	300	350	400	450	500	550	600	650	700	750	800	850	900	950	1000	1050	1100
L	314.5	364.5	414.5	464.5	514.5	564.5	614.5	664.5	714.5	764.5	814.5	864.5	914.5	964.5	1014.5	1064.5	1114.5	1164.5	1214.5	1264.5	1314.5	1364.5
A	50	100	50	100	50	100	50	100	50	100	50	100	50	100	50	100	50	100	50	100	50	100
M	0	0	1	1	2	2	3	3	4	4	5	5	6	6	7	7	8	8	9	9	10	10
N	4	4	6	6	8	8	10	10	12	12	14	14	16	16	18	18	20	20	22	22	24	24
P	50	100	150	200	250	300	350	400	450	500	550	600	650	700	750	800	850	900	950	1000	1050	1100
KG	3.95	4.33	4.74	5.04	5.39	5.72	6.04	6.39	6.68	7.01	7.45	7.75	8.16	8.45	8.69	9.00	9.41	9.66	10.05	10.32	10.74	11.16

Motor Right Side

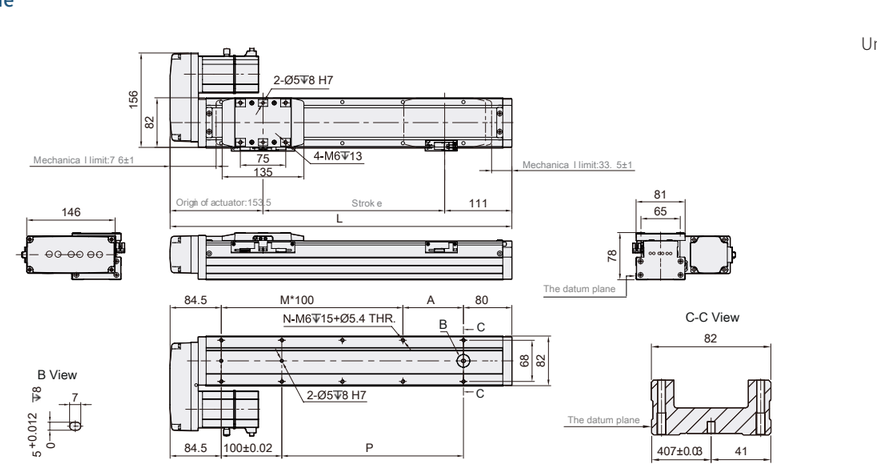

Unit: mm

Stroke	50	100	150	200	250	300	350	400	450	500	550	600	650	700	750	800	850	900	950	1000	1050	1100
L	314.5	364.5	414.5	464.5	514.5	564.5	614.5	664.5	714.5	764.5	814.5	864.5	914.5	964.5	1014.5	1064.5	1114.5	1164.5	1214.5	1264.5	1314.5	1364.5
A	50	100	50	100	50	100	50	100	50	100	50	100	50	100	50	100	50	100	50	100	50	100
M	0	0	1	1	2	2	3	3	4	4	5	5	6	6	7	7	8	8	9	9	10	10
N	4	4	6	6	8	8	10	10	12	12	14	14	16	16	18	18	20	20	22	22	24	24
P	50	100	150	200	250	300	350	400	450	500	550	600	650	700	750	800	850	900	950	1000	1050	1100
KG	3.95	4.33	4.74	5.04	5.39	5.72	6.04	6.39	6.68	7.01	7.45	7.75	8.16	8.45	8.69	9.00	9.41	9.66	10.05	10.32	10.74	11.16

Built-in Electric Module GTHA
Linear Module



Max. Stroke	1250mm

Max. Speed	1600mm/s

Motor Output	400W

Ball Screw	ϕ16mm

GTHA12 - L5 - 100 - BC - M40B - C4 - 0001

Model

Stroke

50-1100mm
50mm Pitch

Customization Order No.

Ball Screw Lead

2	2mm
5	5mm
10	10mm
20	20mm

Motor Position

BC	Motor Exposed
BM	Motor Bottom Side
BL	Motor Left Side
BR	Motor Right Side

Motor Brand、Power Output

M	Mitsubishi	05	-	B
P	Panasonic	10	100W	
Y	Yaskawa	20	-	
T	Delta	40	-	
If No Brake, No Description				

Home Sensor

Outside	
C	Motor Side
D	Opposite Motor Side
NO SENSOR	
E	No Sensor

When the stroke is 50mm, the sensor installation has the following resrtictions:
1. Home sensor and limit sensor has to installed on the different side or body.
2. Both Sides of slider need to install the sensor trigger device.

Limit Sensor

Outside	
3	1 P c
4	2 P c
NO SENSOR	
5	No Sensor

Specification

Spec	Repeatability (mm)		±0.01			
	Ball Screw Lead (mm)		5	10	20	32
	Max. Speed (mm/s)		250	500	1000	1600
	Max. Payload	Horizontal (kg)	110	88	40	30
		Vertical (kg)	33	22	10	8
	Rated Thrust (N)		1388	694	347	218
	Stroke/Pitch (mm)		50-1250m/50 Pitch			
Parts	AC Servo Motor Ouput (W)		400			
	Ball Screw ∅ (mm)		C7ϕ16			
	Coupling (mm)		10x14			
	Home Sensor	Outside	EE-SX674(NPN)			

Sensor Layout

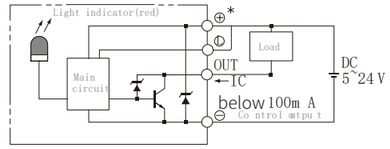

Allowable Moment

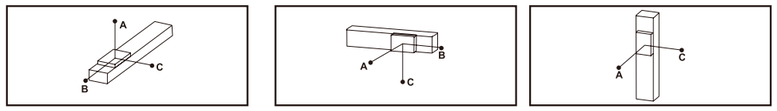

Static Loading Moment

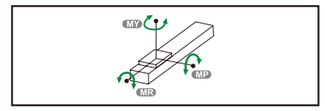

Horizontal Installation		A	B	C
Lead 5	60kg	2850	250	340
	80kg	2100	180	250
	110kg	1500	120	170
Lead 10	30kg	2850	490	600
	50kg	1700	280	350
	88kg	950	140	190
Lead 20	10kg	3400	1250	1400
	22kg	1650	550	620
	40kg	900	290	330
Lead 32	15kg	1100	570	550
	25kg	620	330	320
	30kg	520	270	260

Wall Installation		A	B	C
Lead 5	55kg	280	280	3300
	75kg	200	195	2400
	110kg	130	125	1550
Lead 10	35kg	400	410	2500
	55kg	245	250	1550
	88kg	150	150	950
Lead 20	12kg	900	1070	3000
	20kg	550	630	1800
	40kg	260	300	900
Lead 32	15kg	440	570	1050
	30kg	210	270	520
	-	-	-	-

Vertical Installation		A	C
Lead 5	15kg	1200	1200
	22kg	820	820
	33kg	550	550
Lead 10	10kg	1600	1600
	14kg	1150	1150
	22kg	730	760
Lead 20	7kg	1800	1800
	10kg	1250	1250
	-	-	-
Lead 32	5kg	1600	1600
	8kg	1000	1000
	-	-	-

MY	1168
MP	606
MR	606

The torque value in the chart indicate the center of gravity.
Operation life is 10,000km when the product is using under the specified conditions.
Data information is not for ceiling-mount inverse use.
Contact us for the details if you want to apply ceiling-mount inverse usage.

Suitable Motor Brand

Brand	Mark	Brake	Walt	AC-Voltage	Motor Model	Driver Model
Mitsubishi	M	No Brake (Horizontal Type)	400	220	HG-KR43	MR-J4-40A
		With Brake (Vertical Type)	400	220	HG-KR43B	MR-J4-40A
Panasonic	P	No Brake (Horizontal Type)	400	220	MSMD042G1U	MADHT2510
		With Brake (Vertical Type)	400	220	MSMD042G1V	MADHT2510
Delta	T	No Brake(Horizontal Type)	400	220	ECMA-C20604ES	ASD-B20421-B
		With Brake(Vertical Type)	400	220	ECMA-C20604FS	ASD-B20421-B

Motor Exposed

Unit: mm

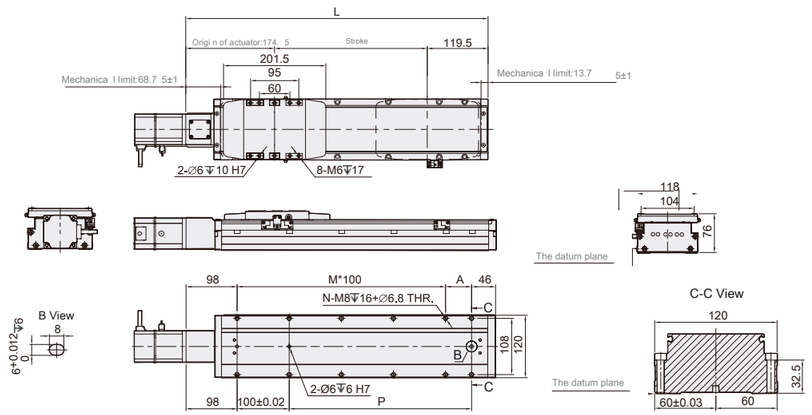

Stroke	50	100	150	200	250	300	350	400	450	500	550	600	650	700	750	800	850	900	950	1000	1050	1100	1150	1200	1250
L	344	394	444	494	544	594	644	694	744	794	844	894	944	994	1044	1094	1144	1194	1244	1294	1344	1394	1444	1494	1544
A	100	50	100	50	100	50	100	50	100	50	100	50	100	50	100	50	100	50	100	50	100	50	100	50	100
M	1	2	2	3	3	4	4	5	5	6	6	7	7	8	8	9	9	10	10	11	11	12	12	13	13
N	6	8	8	10	10	12	12	14	14	16	16	18	18	20	20	22	22	24	24	26	26	28	28	30	30
P	100	150	200	250	300	350	400	450	500	550	600	650	700	750	800	850	900	950	1000	1050	1100	1150	1200	1250	1300
KG	5.05	5.4	5.75	6.1	6.45	6.8	7.15	7.5	7.85	8.2	8.55	8.9	9.25	9.6	9.95	10.3	10.65	11	11.35	11.7	12.05	12.4	12.75	13.1	13.45

Motor Bottom Side

Unit: mm

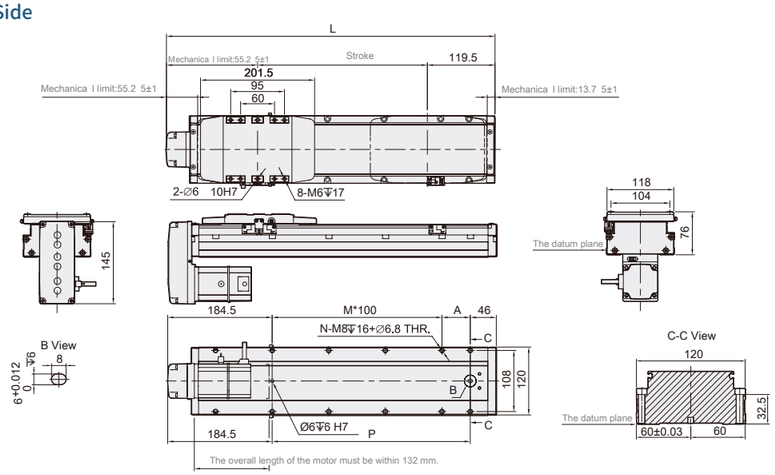

Stroke	50	100	150	200	250	300	350	400	450	500	550	600	650	700	750	800	850	900	950	1000	1050	1100	1150	1200	1250
L	330.5	380.5	430.5	480.5	530.5	580.5	630.5	680.5	730.5	780.5	830.5	880.5	930.5	980.5	1030.5	1080.5	1130.5	1180.5	1230.5	1280.5	1330.5	1380.5	1430.5	1480.5	1530.5
A	100	50	100	50	100	50	100	50	100	50	100	50	100	50	100	50	100	50	100	50	100	50	100	50	100
M	0	1	1	2	2	3	3	4	4	5	5	6	6	7	7	8	8	9	9	10	10	11	11	12	12
N	4	6	6	8	8	10	10	12	12	14	14	16	16	18	18	20	20	22	22	24	24	26	26	28	28
P	100	150	200	250	300	350	400	450	500	550	600	650	700	750	800	850	900	1000	1050	1100	1150	1200	1250	1300	1350
KG	5.21	5.56	5.91	6.26	6.61	6.96	7.31	7.66	8.01	8.36	8.71	9.06	9.41	9.76	10.11	10.46	10.81	11.16	11.51	11.86	12.21	12.56	12.91	13.26	13.61

Motor Left Side

Unit: mm

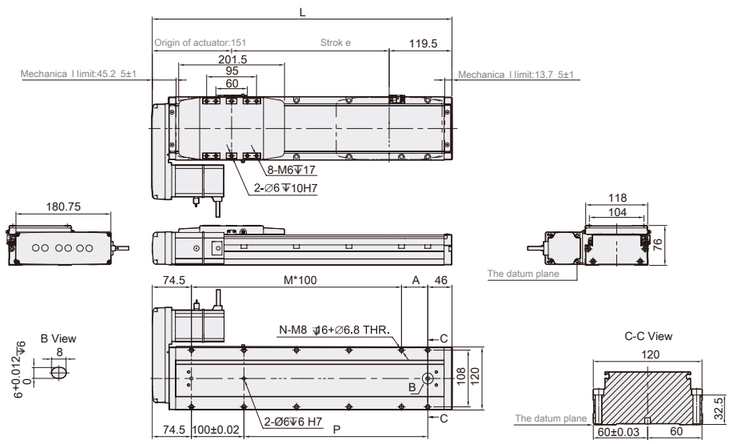

Stroke	50	100	150	200	250	300	350	400	450	500	550	600	650	700	750	800	850	900	950	1000	1050	1100	1150	1200	1250
L	330.5	380.5	430.5	480.5	530.5	580.5	630.5	680.5	730.5	780.5	830.5	880.5	930.5	980.5	1030.5	1080.5	1130.5	1180.5	1230.5	1280.5	1330.5	1380.5	1430.5	1480.5	1530.5
A	100	50	100	50	100	50	100	50	100	50	100	50	100	50	100	50	100	50	100	50	100	50	100	50	100
M	0	1	1	2	2	3	3	4	4	5	5	6	6	7	7	8	8	9	9	10	10	11	11	12	12
N	4	6	6	8	8	10	10	12	12	14	14	16	16	18	18	20	20	22	22	24	24	26	26	28	28
P	100	150	200	250	300	350	400	450	500	550	600	650	700	750	800	850	900	1000	1050	1100	1150	1200	1250	1300	1350
KG	5.21	5.56	5.91	6.26	6.61	6.96	7.31	7.66	8.01	8.36	8.71	9.06	9.41	9.76	10.11	10.46	10.81	11.16	11.51	11.86	12.21	12.56	12.91	13.26	13.61

Motor Right Side

Unit: mm

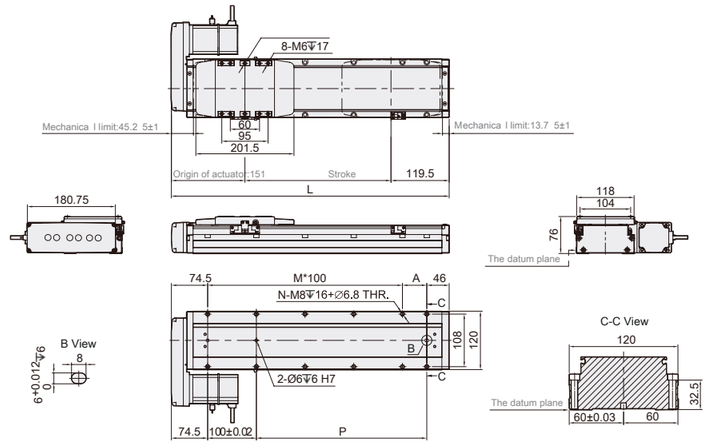

Stroke	50	100	150	200	250	300	350	400	450	500	550	600	650	700	750	800	850	900	950	1000	1050	1100	1150	1200	1250
L	330.5	380.5	430.5	480.5	530.5	580.5	630.5	680.5	730.5	780.5	830.5	880.5	930.5	980.5	1030.5	1080.5	1130.5	1180.5	1230.5	1280.5	1330.5	1380.5	1430.5	1480.5	1530.5
A	100	50	100	50	100	50	100	50	100	50	100	50	100	50	100	50	100	50	100	50	100	50	100	50	100
M	0	1	1	2	2	3	3	4	4	5	5	6	6	7	7	8	8	9	9	10	10	11	11	12	12
N	4	6	6	8	8	10	10	12	12	14	14	16	16	18	18	20	20	22	22	24	24	26	26	28	28
P	100	150	200	250	300	350	400	450	500	550	600	650	700	750	800	850	900	1000	1050	1100	1150	1200	1250	1300	1350
KG	5.21	5.56	5.91	6.26	6.61	6.96	7.31	7.66	8.01	8.36	8.71	9.06	9.41	9.76	10.11	10.46	10.81	11.16	11.51	11.86	12.21	12.56	12.91	13.26	13.61

Built-in Electric Module GTHA
Linear Module



Max. Stroke	1250mm	Max. Speed	1600mm/s	Motor Output	100W	Ball Screw	ϕ16mm

GTHA5S - L2 - 100 - BC - M10B - C4 - 0001

Model

Stroke

25-325mm
25mm Pitch

Ball Screw Lead

2	2mm
5	5mm
10	10mm
20	20mm

Motor Position

BC	Motor Exposed
BM	Motor Bottom Side
BL	Motor Left Side
BR	Motor Right Side

Motor Brand、Power Output

M	Mitsubishi	05	-	B
P	Panasonic	10	100W	
Y	Yaskawa	20	-	
T	Delta	40	-	
If No Brake, No Descripition				

Home Sensor

Outside	
C	Motor Side
D	Opposite Motor Side
NO SENSOR	
E	No Sensor

When the stroke is 50mm, the sensor installation has the following resrtictions:
1. Home sensor and limit sensor has to installed on the different side or body.
2. Both Sides of slider need to install the sensor trigger device.

Limit Sensor

Outside	
3	1 P c
4	2 P c
NO SENSOR	
5	No Sensor

Customization Order No.

Specification

Spec	Repeatability (mm)		±0.01
	Ball Screw Lead (mm)		2
	Max. Speed (mm/s)		100
	Max. Payload	Horizontal (kg)	30 (Daul carriage)
		Vertical (kg)	10 （Daul carriage)
	Rated Thrust (N)		854
	Stroke/Pitch (mm)		25-325m/25 Pitch
Parts	AC Servo Motor Ouput (W)		100
	Ball Screw ∅ (mm)		C7ϕ16
	Coupling (mm)		10x14
	Home Sensor	Outside	EE-SX674(NPN)

Sensor Layout

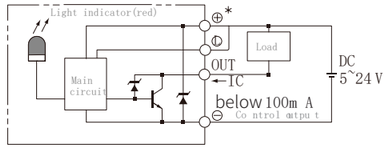

Allowable Moment

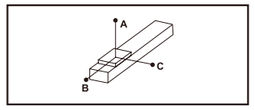

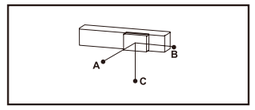

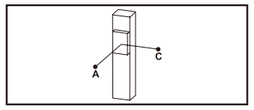

Horizontal Installation		A	B	C
Lead 5	10kg	900	100	135
	20kg	700	45	60
	30kg	550	25	35

Wall Installation		A	B	C
Lead 5	10kg	135	100	900
	20kg	60	45	700
	30kg	37	27	550

Vertical Installation		A	C
Lead 5	6kg	180	180
	8kg	135	135
	10kg	110	110

Static Loading Moment

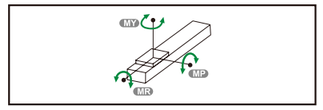

MY	103
MP	103
MR	144

The torque value in the chart indicate the center of gravity.
Operation life is 10,000km when the product is using under the specified conditions.
Data information is not for ceiling-mount inverse use.
Contact us for the details if you want to apply ceiling-mount inverse usage.

Suitable Motor Brand

Brand	Mark	Brake	Walt	AC-Voltage	Motor Model	Driver Model
Mitsubishi	M	No Brake (Horizontal Type)	100	220	HG-KR13	MR-J4-10A
		With Brake (Vertical Type)	100	220	HG-KR13B	MR-J4-10A
Panasonic	P	No Brake (Horizontal Type)	100	220	MSMD012G1U	MADHT1505
		With Brake (Vertical Type)	100	220	MSMD012G1V	MADHT1505
Delta	T	No Brake(Horizontal Type)	100	220	ECMA-C20401ES	ASD-B20121-B
		With Brake(Vertical Type)	100	220	ECMA-C20401FS	ASD-B20121-B

Motor Exposed

Unit: mm

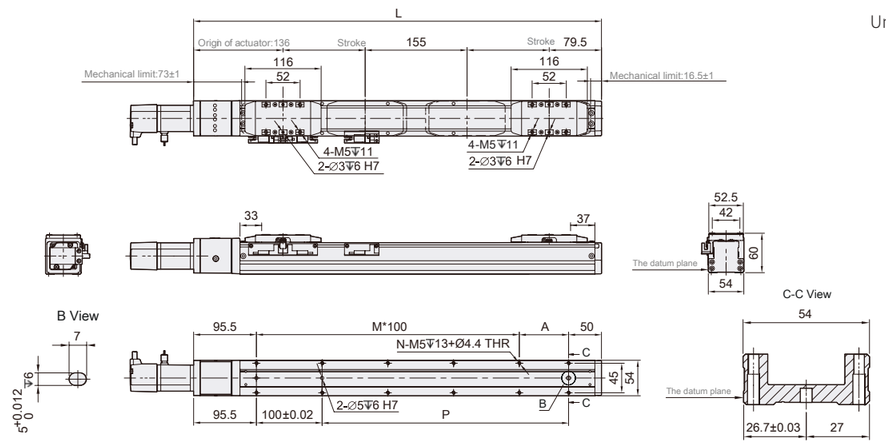

Stroke	25	50	75	100	125	150	175	200	225	250	275	300	325
L	420.5	470.5	520.5	570.5	620.5	670.5	720.5	770.5	820.5	870.5	920.5	970.5	1020.5
A	75	25	75	25	75	25	75	25	75	25	75	25	75
M	2	3	3	4	4	5	5	6	6	7	7	8	8
N	8	10	10	12	12	14	14	16	16	18	18	20	20
P	175	225	275	325	375	425	475	525	575	625	675	725	775
KG	2.82	3.01	3.21	3.41	3.6	3.8	4	4.19	4.39	4.59	4.78	4.98	5.18

Motor Bottom Side

Unit: mm

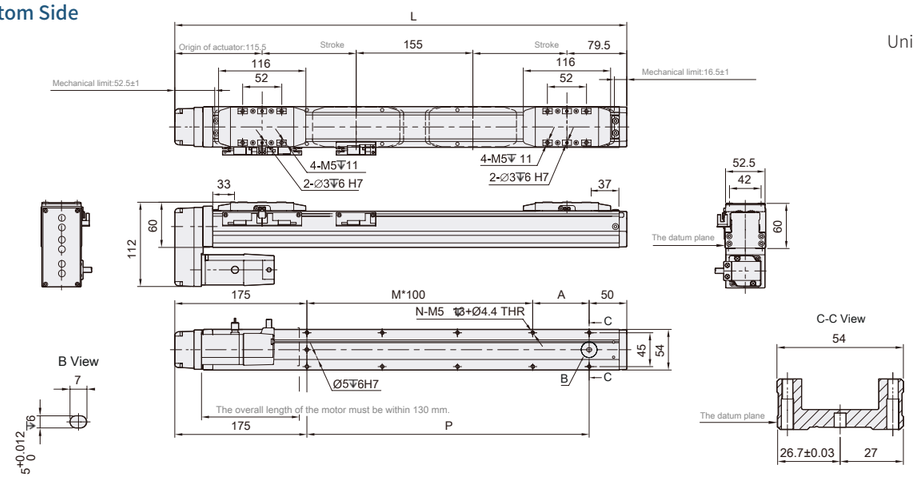

Stroke	25	50	75	100	125	150	175	200	225	250	275	300	325
L	400	450	500	550	600	650	700	750	800	850	900	950	1000
A	75	25	75	25	75	25	75	25	75	25	75	25	75
M	1	2	2	3	3	4	4	5	5	6	6	7	7
N	6	8	8	10	10	12	12	14	14	16	16	18	18
P	175	225	275	325	375	425	475	525	575	625	675	725	775
KG	2.99	3.18	3.38	3.58	3.77	3.97	4.17	4.36	4.56	4.76	4.95	5.15	5.35

Motor Left Side

Unit: mm

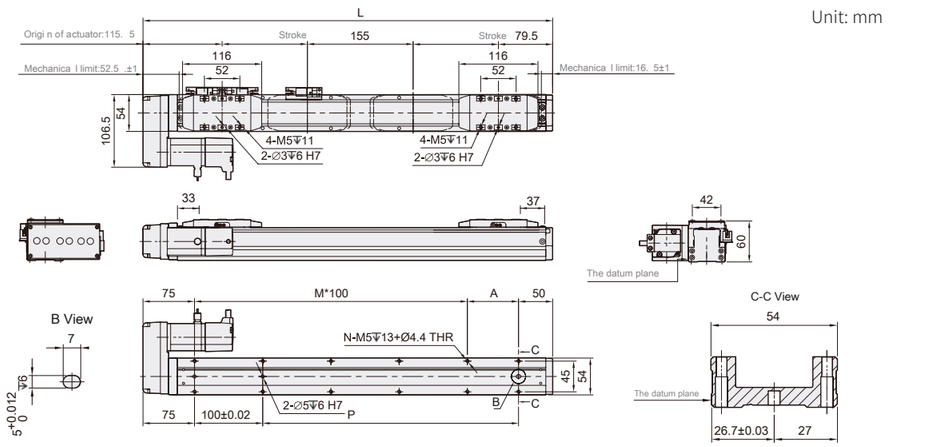

Stroke	25	50	75	100	125	150	175	200	225	250	275	300	325
L	400	450	500	550	600	650	700	750	800	850	900	950	1000
A	75	25	75	25	75	25	75	25	75	25	75	25	75
M	1	2	2	3	3	4	4	5	5	6	6	7	7
N	6	8	8	10	10	12	12	14	14	16	16	18	18
P	175	225	275	325	375	425	475	525	575	625	675	725	775
KG	2.99	3.18	3.38	3.58	3.77	3.97	4.17	4.36	4.56	4.76	4.95	5.15	5.35

Motor Right Side

Unit: mm

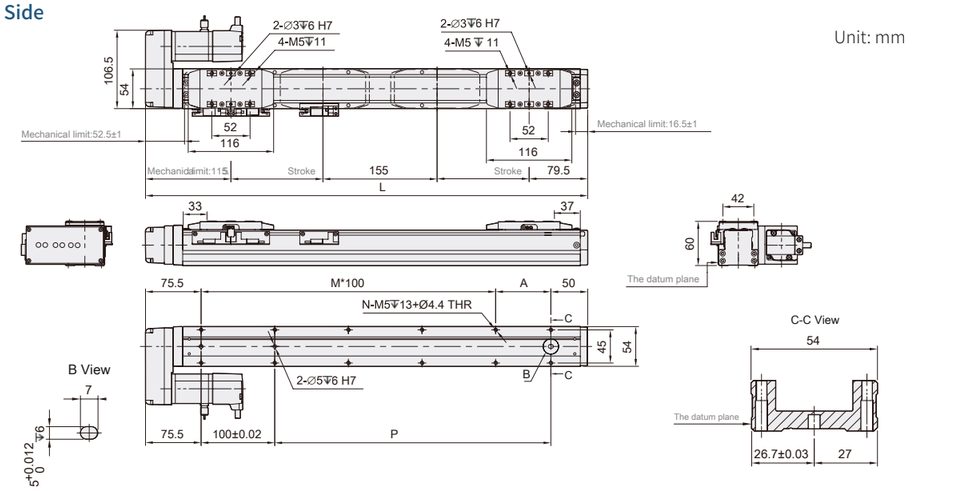

Stroke	25	50	75	100	125	150	175	200	225	250	275	300	325
L	400	450	500	550	600	650	700	750	800	850	900	950	1000
A	75	25	75	25	75	25	75	25	75	25	75	25	75
M	1	2	2	3	3	4	4	5	5	6	6	7	7
N	6	8	8	10	10	12	12	14	14	16	16	18	18
P	175	225	275	325	375	425	475	525	575	625	675	725	775
KG	2.99	3.18	3.38	3.58	3.77	3.97	4.17	4.36	4.56	4.76	4.95	5.15	5.35

Built-in Electric Module GTHA
Linear Module



Max. Stroke	450mm	Max. Speed	250mm/s	Motor Output	200W	Ball Screw	ϕ16mm

GTHA8S - L5 - 100 - BC - M20B - C4 - 0001

Model

Stroke

25-450mm
25mm Pitch

Customization Order No.

Ball Screw Lead

5	5mm

Motor Position

BC	Motor Exposed
BM	Motor Bottom Side
BL	Motor Left Side
BR	Motor Right Side

Motor Brand、Power Output

M	Mitsubishi	05	-	B
P	Panasonic	10	200W	
Y	Yaskawa	20	-	
T	Delta	40	-	

If No Brake, No Descripition

Home Sensor

Outside	
C	Motor Side
D	Opposite Motor Side
NO SENSOR	
E	No Sensor

When the stroke is 50mm, the sensor installation has the following resrtictions:
1. Home sensor and limit sensor has to installed on the different side or body.
2. Both Sides of slider need to install the sensor trigger device.

Limit Sensor

Outside	
3	1 P c
4	2 P c
NO SENSOR	
5	No Sensor

Specification

Spec	Repeatability (mm)		±0.01
	Ball Screw Lead (mm)		5
	Max. Speed (mm/s)		250
	Max. Payload	Horizontal (kg)	50 (Daul carriage)
		Vertical (kg)	15 (Daul carriage)
	Rated Thrust (N)		683
	Stroke/Pitch (mm)		25-450m/25 mm Pitch
Parts	AC Servo Motor Ouput (W)		200
	Ball Screw ∅ (mm)		C7ϕ16
	Coupling (mm)		10x14/11
	Home Sensor	Outside	EE-SX674(NPN)

Sensor Layout

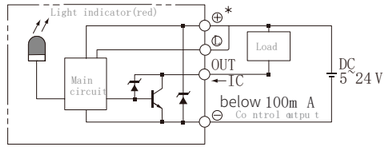

Allowable Moment

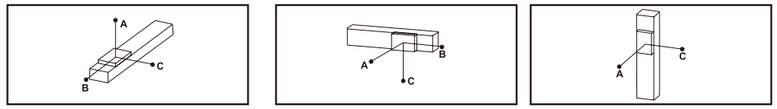

Horizontal Installation		A	B	C
Lead 5	20kg	1560	153	237
	35kg	890	81	126
	50kg	550	53	82

Wall Installation		A	B	C
Lead 5	20kg	214	153	1435
	35kg	113	81	845
	50kg	74	53	506

Vertical Installation		A	C
Lead 5	10kg	331	331
	15kg	220	220
	-	-	-

Static Loading Moment

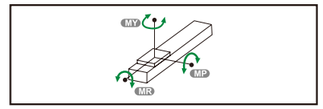

MY	318
MP	318
MR	626

The torque value in the chart indicate the center of gravity.
Operation life is 10,000km when the product is using under the specified conditions.
Data information is not for ceiling-mount inverse use.
Contact us for the details if you want to apply ceiling-mount inverse usage.

Suitable Motor Brand

Brand	Mark	Brake	Walt	AC-Voltage	Motor Model	Driver Model
Mitsubishi	M	No Brake (Horizontal Type)	200	220	HG-KR23	MR-J4-20A
		With Brake (Vertical Type)	200	220	HG-KR23B	MR-J4-20A
Panasonic	P	No Brake (Horizontal Type)	200	220	MSMD022G1U	MADHT1507
		With Brake (Vertical Type)	200	220	MSMD022G1V	MADHT1507
Delta	T	No Brake(Horizontal Type)	200	220	ECMA-C20602ES	ASD-B20221-B
		With Brake(Vertical Type)	200	220	ECMA-C20602FS	ASD-B20221-B

Motor Exposed

Unit: mm

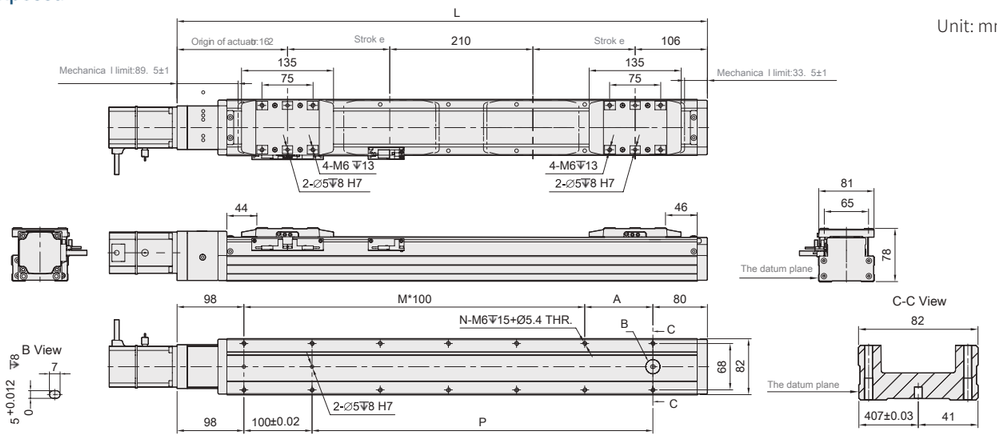

Stroke	25	50	75	100	125	150	175	200	225	250	275	300	325	350	375	400	425
L	528	578	628	678	728	778	828	878	928	978	1028	1078	1128	1178	1228	1278	1328
A	50	100	50	100	50	100	50	100	50	100	50	100	50	100	50	100	50
M	3	3	4	4	5	5	6	6	7	7	8	8	9	9	10	10	11
N	10	10	12	12	14	14	16	16	18	18	20	20	22	22	24	24	26
P	250	300	350	400	450	500	550	600	650	700	750	800	850	900	950	1000	1050
KG	6.64	7.00	7.37	7.73	8.10	8.46	8.83	9.19	9.56	9.92	10.29	10.65	11.02	11.38	11.75	12.11	12.48

Motor Bottom Side

Unit: mm

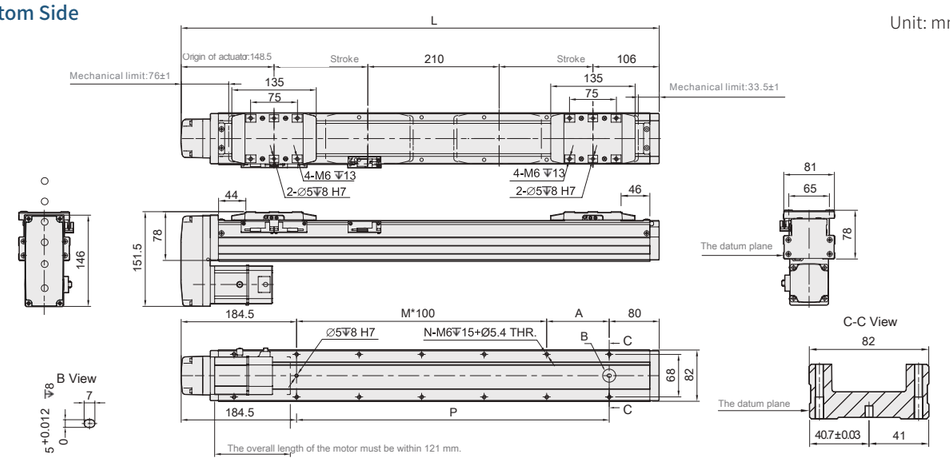

Stroke	25	50	75	100	125	150	175	200	225	250	275	300	325	350	375	400	425
L	514.5	564.5	614.5	664.5	714.5	764.5	814.5	864.5	914.5	964.5	1014.5	1064.5	1114.5	1164.5	1214.5	1264.5	1314.5
A	50	100	50	100	50	100	50	100	50	100	50	100	50	100	50	100	50
M	2	2	3	3	4	4	5	5	6	6	7	7	8	8	9	9	10
N	8	8	10	10	12	12	14	14	16	16	18	18	20	20	22	22	24
P	250	300	350	400	450	500	550	600	650	700	750	800	850	900	950	1000	1050
KG	7.16	7.68	8.2	8.72	9.24	9.76	10.28	10.8	11.32	11.84	12.36	12.88	13.4	13.92	14.44	14.96	15.48

Motor Left Side

Unit: mm

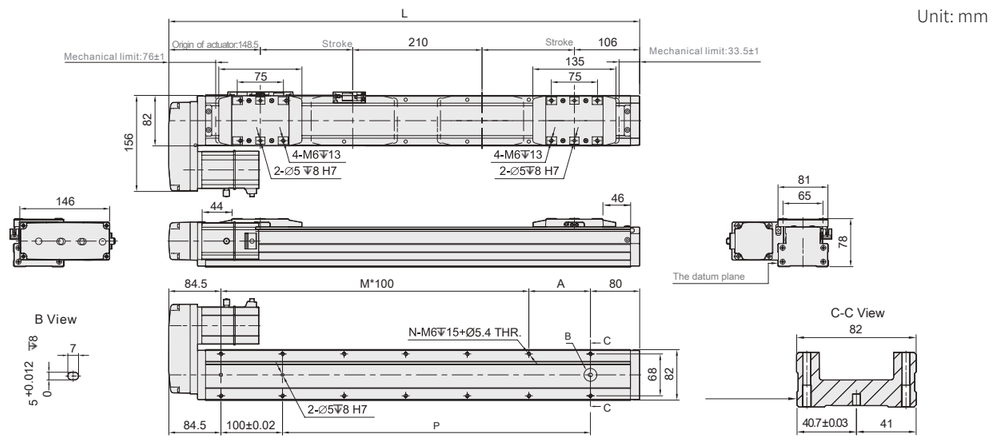

Stroke	25	50	75	100	125	150	175	200	225	250	275	300	325	350	375	400	425
L	514.5	564.5	614.5	664.5	714.5	764.5	814.5	864.5	914.5	964.5	1014.5	1064.5	1114.5	1164.5	1214.5	1264.5	1314.5
A	50	100	50	100	50	100	50	100	50	100	50	100	50	100	50	100	50
M	2	2	3	3	4	4	5	5	6	6	7	7	8	8	9	9	10
N	8	8	10	10	12	12	14	14	16	16	18	18	20	20	22	22	24
P	250	300	350	400	450	500	550	600	650	700	750	800	850	900	950	1000	1050
KG	7.16	7.68	8.2	8.72	9.24	9.76	10.28	10.8	11.32	11.84	12.36	12.88	13.4	13.92	14.44	14.96	15.48

Motor Right Side

Unit: mm

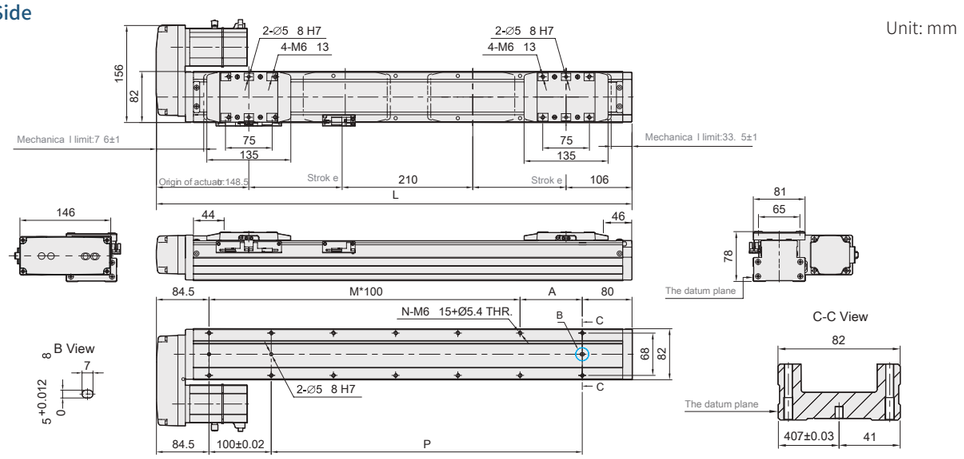

Stroke	25	50	75	100	125	150	175	200	225	250	275	300	325	350	375	400	425
L	514.5	564.5	614.5	664.5	714.5	764.5	814.5	864.5	914.5	964.5	1014.5	1064.5	1114.5	1164.5	1214.5	1264.5	1314.5
A	50	100	50	100	50	100	50	100	50	100	50	100	50	100	50	100	50
M	2	2	3	3	4	4	5	5	6	6	7	7	8	8	9	9	10
N	8	8	10	10	12	12	14	14	16	16	18	18	20	20	22	22	24
P	250	300	350	400	450	500	550	600	650	700	750	800	850	900	950	1000	1050
KG	7.16	7.68	8.2	8.72	9.24	9.76	10.28	10.8	11.32	11.84	12.36	12.88	13.4	13.92	14.44	14.96	15.48

Built-in Electric Module GTHA
Linear Module



Max. Stroke	450mm	Max. Speed	250mm/s	Motor Output	400W	Ball Screw	ϕ16mm

GTHA8S - L5 - 100 - BC - M40B - C4 - 0001

Model

Stroke

25-450mm
25mm Pitch

Ball Screw Lead

5	5mm

Motor Position

BC	Motor Exposed
BM	Motor Bottom Side
BL	Motor Left Side
BR	Motor Right Side

Motor Brand、Power Output

M	Mitsubishi	05	-	B
P	Panasonic	10	-	
Y	Yaskawa	20	-	
T	Delta	40	400W	
If No Brake, No Descripition				

Home Sensor

Outside	
C	Motor Side
D	Opposite Motor Side
NO SENSOR	
E	No Sensor

When the stroke is 50mm, the sensor installation has the following resrtictions:
1. Home sensor and limit sensor has to installed on the different side or body.
2. Both Sides of slider need to install the sensor trigger device.

Limit Sensor

Outside	
3	1 P c
4	2 P c
NO SENSOR	
5	No Sensor

Customization Order No.

Specification

Spec	Repeatability (mm)		±0.01
	Ball Screw Lead (mm)		5
	Max. Speed (mm/s)		250
	Max. Payload	Horizontal (kg)	50 (Daul carriage)
		Vertical (kg)	15 （Daul carriage)
	Rated Thrust (N)		1388
	Stroke/Pitch (mm)		25-450m/25 mm Pitch
Parts	AC Servo Motor Ouput (W)		400
	Ball Screw ∅ (mm)		C7ϕ16
	Coupling (mm)		10x14
	Home Sensor	Outside	EE-SX674(NPN)

Sensor Layout

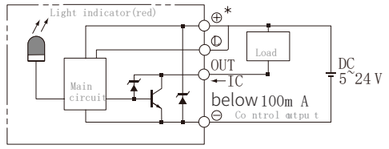

Allowable Moment

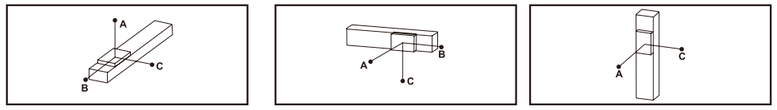

Horizontal Installation		A	B	C
Lead 5	20kg	1560	153	237
	35kg	890	81	126
	50kg	550	53	82

Wall Installation		A	B	C
Lead 5	20kg	214	153	1435
	35kg	113	81	845
	50kg	74	53	506

Vertical Installation		A	C
Lead 5	10kg	331	331
	15kg	220	220
	-	-	-

Static Loading Moment

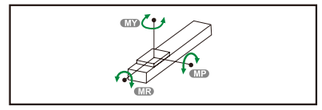

MY	318
MP	318
MR	626

The torque value in the chart indicate the center of gravity. Operation life is 10,000km when the product is using under the specified conditions.Data information is not for ceiling-mount inverse use. Contact us for the details if you want to apply ceiling-mount inverse usage.

Suitable Motor Brand

Brand	Mark	Brake	Walt	AC-Voltage	Motor Model	Driver Model
Mitsubishi	M	No Brake (Horizontal Type)	400	220	HG-KR43	MR-J4-40A
		With Brake (Vertical Type)	400	220	HG-KR43B	MR-J4-40A
Panasonic	P	No Brake (Horizontal Type)	400	220	MSMD042G1U	MADHT2510
		With Brake (Vertical Type)	400	220	MSMD042G1V	MADHT2510
Delta	T	No Brake(Horizontal Type)	400	220	ECMA-C20604ES	ASD-B20421-B
		With Brake(Vertical Type)	400	220	ECMA-C20604FS	ASD-B20421-B

Motor Exposed

Unit: mm

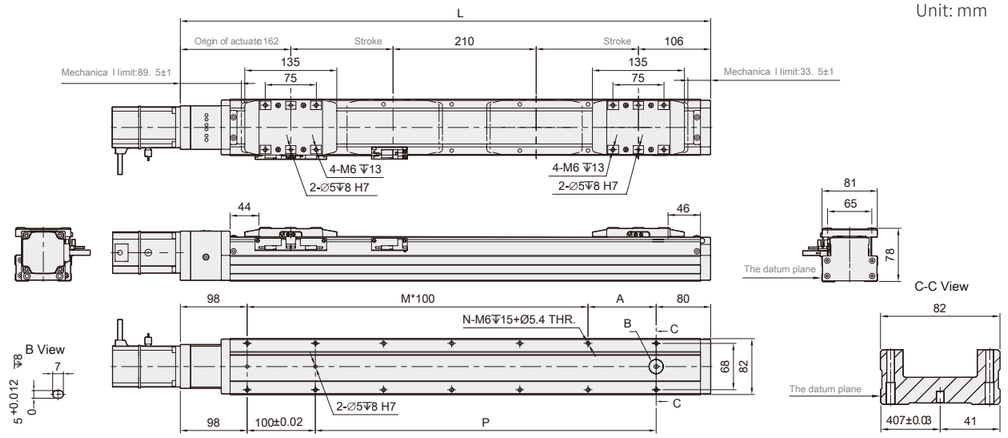

Stroke	25	50	75	100	125	150	175	200	225	250	275	300	325	350	375	400	425
L	528	578	628	678	728	778	828	878	928	978	1028	1078	1128	1178	1228	1278	1328
A	50	100	50	100	50	100	50	100	50	100	50	100	50	100	50	100	50
M	3	3	4	4	5	5	6	6	7	7	8	8	9	9	10	10	11
N	10	10	12	12	14	14	16	16	18	18	20	20	22	22	24	24	26
P	250	300	350	400	450	500	550	600	650	700	750	800	850	900	950	1000	1050
KG	6.64	7.00	7.37	7.73	8.10	8.46	8.83	9.19	9.56	9.92	10.29	10.65	11.02	11.38	11.75	12.11	12.48

Motor Bottom Side

Unit: mm

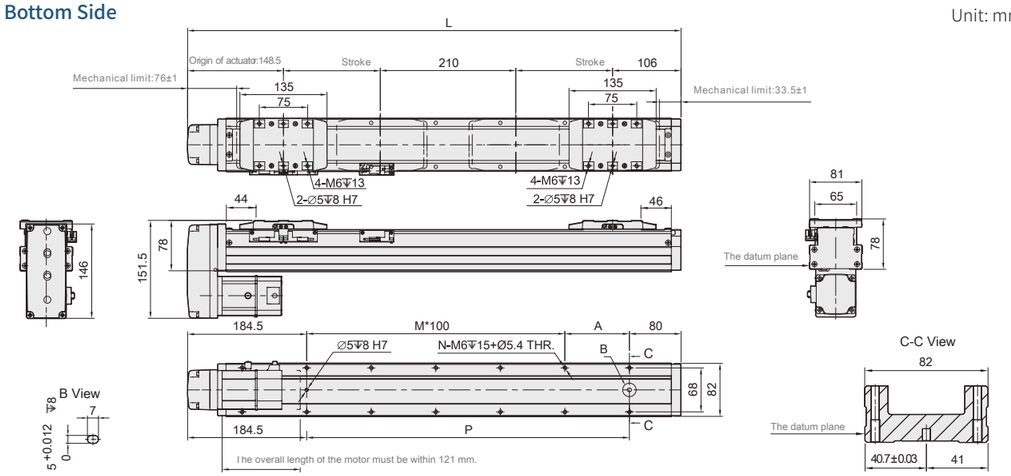

Stroke	25	50	75	100	125	150	175	200	225	250	275	300	325	350	375	400	425
L	514.5	564.5	614.5	664.5	714.5	764.5	814.5	864.5	914.5	964.5	1014.5	1064.5	1114.5	1164.5	1214.5	1264.5	1314.5
A	50	100	50	100	50	100	50	100	50	100	50	100	50	100	50	100	50
M	2	2	3	3	4	4	5	5	6	6	7	7	8	8	9	9	10
N	8	8	10	10	12	12	14	14	16	16	18	18	20	20	22	22	24
P	250	300	350	400	450	500	550	600	650	700	750	800	850	900	950	1000	1050
KG	7.16	7.68	8.2	8.72	9.24	9.76	10.28	10.8	11.32	11.84	12.36	12.88	13.4	13.92	14.44	14.96	15.48

Motor Left Side

Unit: mm

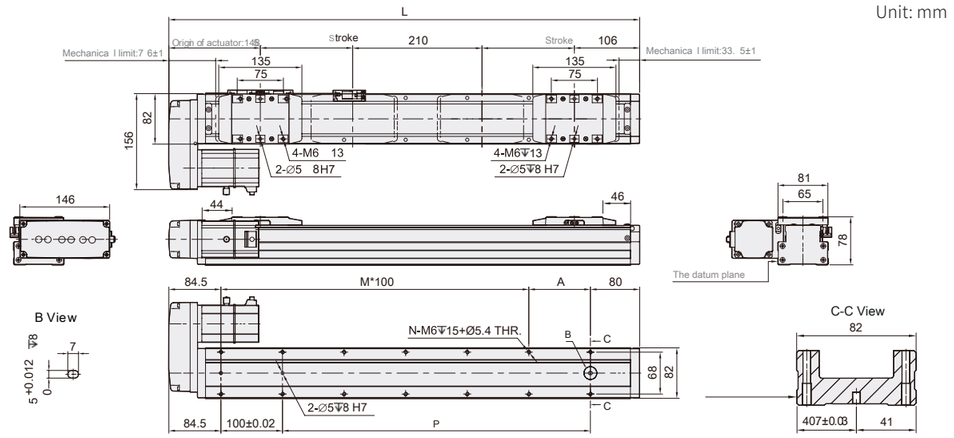

Stroke	25	50	75	100	125	150	175	200	225	250	275	300	325	350	375	400	425
L	514.5	564.5	614.5	664.5	714.5	764.5	814.5	864.5	914.5	964.5	1014.5	1064.5	1114.5	1164.5	1214.5	1264.5	1314.5
A	50	100	50	100	50	100	50	100	50	100	50	100	50	100	50	100	50
M	2	2	3	3	4	4	5	5	6	6	7	7	8	8	9	9	10
N	8	8	10	10	12	12	14	14	16	16	18	18	20	20	22	22	24
P	250	300	350	400	450	500	550	600	650	700	750	800	850	900	950	1000	1050
KG	7.16	7.68	8.2	8.72	9.24	9.76	10.28	10.8	11.32	11.84	12.36	12.88	13.4	13.92	14.44	14.96	15.48

Motor Right Side

Unit: mm

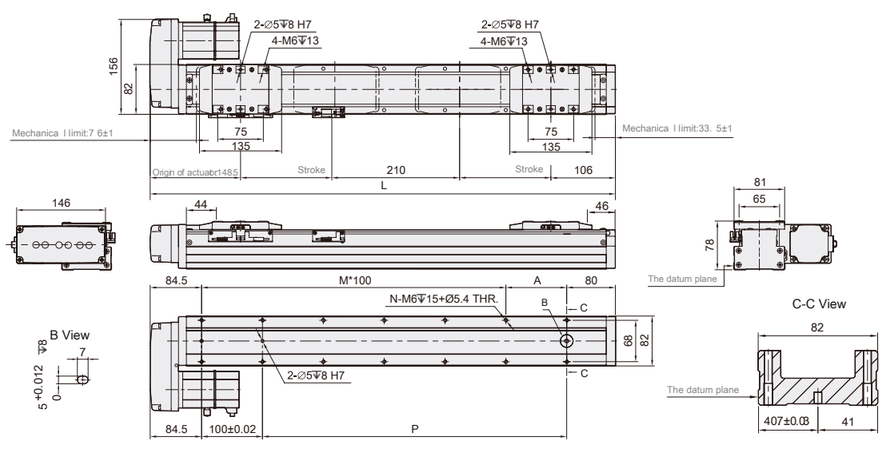

Stroke	25	50	75	100	125	150	175	200	225	250	275	300	325	350	375	400	425
L	514.5	564.5	614.5	664.5	714.5	764.5	814.5	864.5	914.5	964.5	1014.5	1064.5	1114.5	1164.5	1214.5	1264.5	1314.5
A	50	100	50	100	50	100	50	100	50	100	50	100	50	100	50	100	50
M	2	2	3	3	4	4	5	5	6	6	7	7	8	8	9	9	10
N	8	8	10	10	12	12	14	14	16	16	18	18	20	20	22	22	24
P	250	300	350	400	450	500	550	600	650	700	750	800	850	900	950	1000	1050
KG	7.16	7.68	8.2	8.72	9.24	9.76	10.28	10.8	11.32	11.84	12.36	12.88	13.4	13.92	14.44	14.96	15.48

SCREW TECHNOLOGY CO.,LTD.

Add:No 988,Wsong Road,Wuzhong Disrict,Suzhou,China
Tel:+86-0512-66903936,+86-0512-65073935
E-mail:IMD@screwtech.cn
Web:http://www.screw-tech.com/

V-6.1
20210624