DECK LIGHT FIXTURES



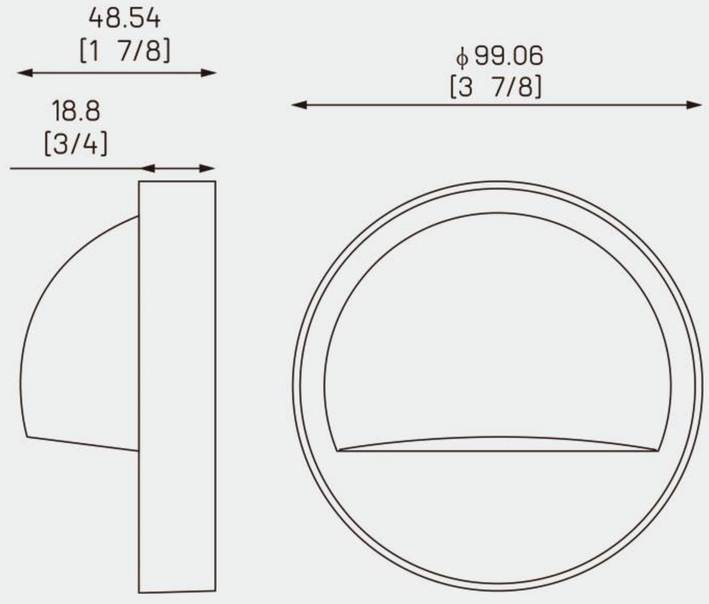

LT2601

Materials

Die-cast brass

Body

Fully cast brass

Shroud

Fully machined

Twist/lock shroud for esy relamping and dajusting

Lens

Shock resistant,frosted glass lens

Lamp

For use with a halogen lamp up to 50W
G4 Lamp.LT Tech LED G4 lamps are available
in 2W,3W and 4W,in 2700K and 3000K.

Warranty

5 years warranty

IP66

Lutou Technology Co,. LTD | info@lutou-tech.com | www.lutou-tech.com | +86-755-28716871