ADL200



General

ADL200 single-phase electric meter is designed for single-phase energy measurement on low voltage system.The meter meet the related technical requirements of electronic meter in the IEC62053-21、IEC62053-22 standards.

Functions

Function	Description	Provide
Measurement of kWh	kWh (positive and negative)	■
	kvarh (positive and negative)	■
Measurement of electrical parameters	U、I、P、Q、S、PF、Hz	■
LCD Display	8 digits	■
Key	3 keys	■
LED alarm	voltage loss and over voltage	■
Pulse output	kWh	■
Communication	Infrared	■
	RS485, MODBUS-RTU	■

Note:(■: means standard, □:means optional)

Parameters

■ Electric performance

Voltage	Reference voltage	AC 220V
	Reference frequency	50Hz
	Power consumption	<10VA
Current	Basic current	10A
	Maximum current	80A
	Consumption	<4VA
Energy accuracy	Accuracy measuring	1class
Clock	accuracy	≤0.5s/d
Active pulse	Pulse width	80±20ms
Active pulse	Pulse constant	1000imp/kWh
Communication	Interface	RS485
	Protocol	MODBUS-RTU

■ Working environment

Temperature	Working	-25℃~55℃
	Storing	-40℃~70℃
Humidity	≤95%(No condensation)	
Altitude	<2000m	

Dimension drawings (Unit: mm)

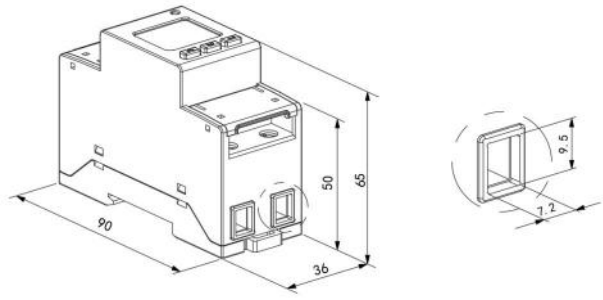

Note: The torque of direct connect should not be greater than 4.0N·m.

Wiring and installing

■ Wiring

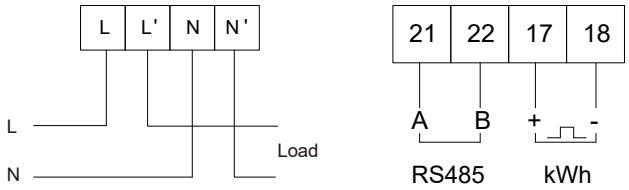

■ Installing



ADL200 installing

Note: DIN 35 mm rail installation.

Display examples

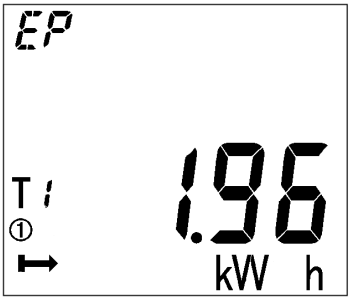

Total active energy

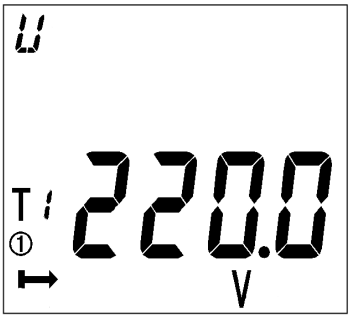

Voltage

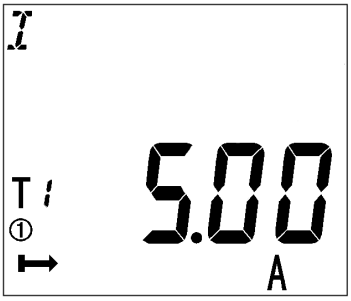

Current

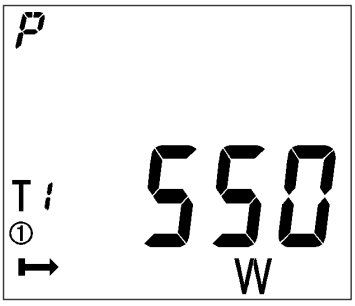

power