ADW2XX Series Wireless Energy Meter



The product is a rail type multi-loop power meter,including MCU module and power module, including metering module,current module and voltage input module.

Product Functions

Function	Description
LCD display	8 digits
Measurement of Energy	kWh (positive and negative)
	kvarh (positive and negative)
	A, B, C phase positive kWh
Electrical parameters	U、I、P、Q、S、PF、Hz
Harmonic	2~31ST voltage and current harmonic
Key programming	4 keys to communication and set parameters
Residual current	1-channel
LED alarm	Over-voltage、over-current、phase interrupt、DI
Data	Maximum demanded kWh and time happened
SOE	200

Technical Parameter

Input	Frequency	45 ~ 65Hz
	Nominal current	3×220V/380V
	Consumption	≤ 0.5VA
	Current	5A、100A
	Communication	RS485、Modbus-RTU
	Baud rate	1200 ~ 38400
Accuracy	Current	class 0.5
	Active power	class 1
	Reactive power	class 2

Auxiliary functions

(MK)	12 DI+4 DO
(MTL)	12 channels of temperature,4 channels of after-current
(AWT100-2G)	2G
(AWT100-4G)	4G
(AWT100-NB)	NB-IoT
(AWT100-LoRa)	LoRa
(AWT100-LW)	LoRaWAN

Modular parameter

MK	DI	12 channels
	DO	4 channels
MTL	Temperature measurement	-20 ~ 100℃
	After-current	10 ~ 3000mA
	Accuracy	±2℃、Class 1

Working Environment

Temperature	Operating	-25℃~55℃
	Storing	-40℃~70℃
Humidity	≤95%(No condensation)	
Altitude	<2000m	

Dimensions drawings

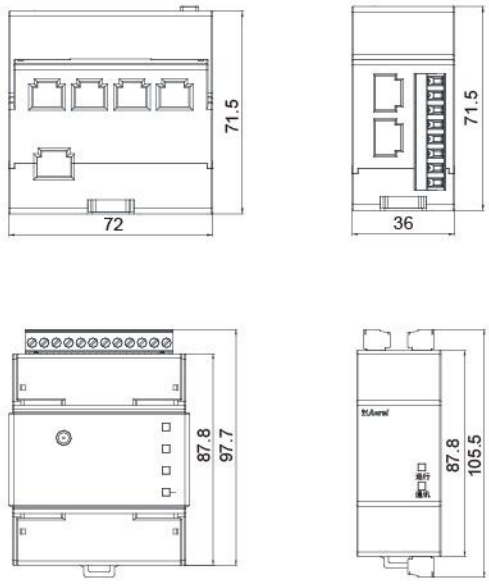

Wiring and installing

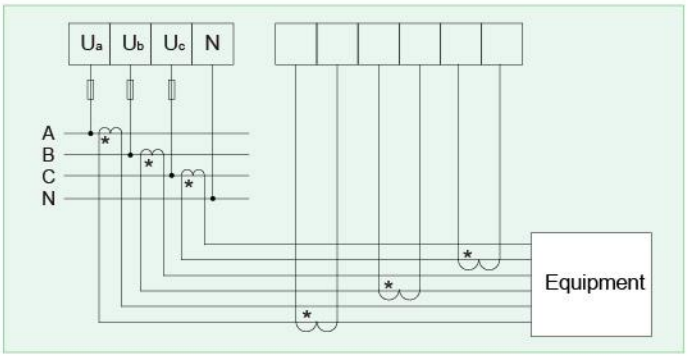

Three-phase four-wire

Voltage access via PT

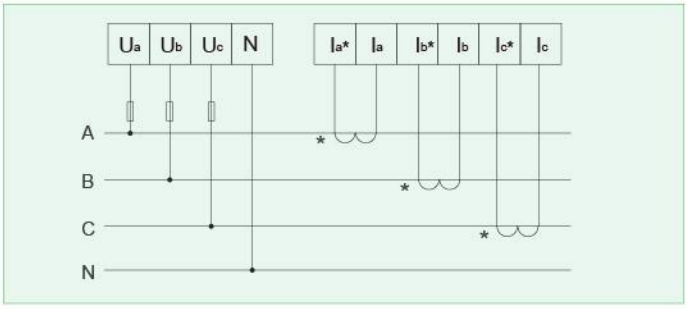

Three-phase four-wire

Voltage access via PT、ct

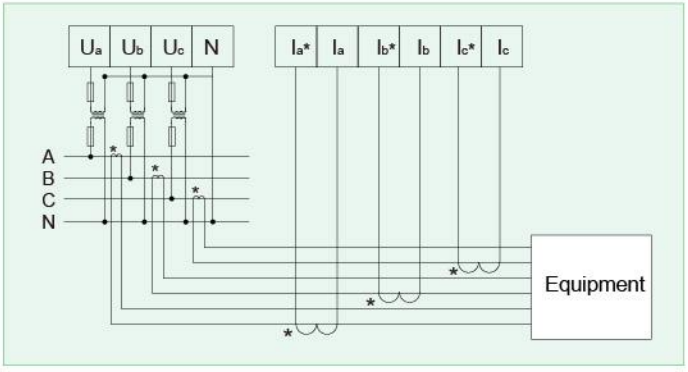

Three-phase three-wire

Voltage access via ct

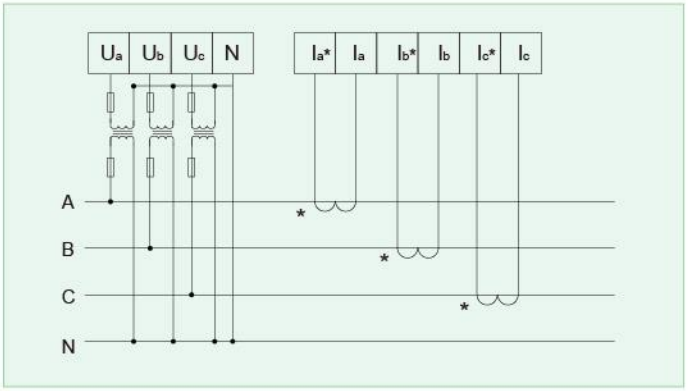

Three-phase four-wire

Voltage access via ct

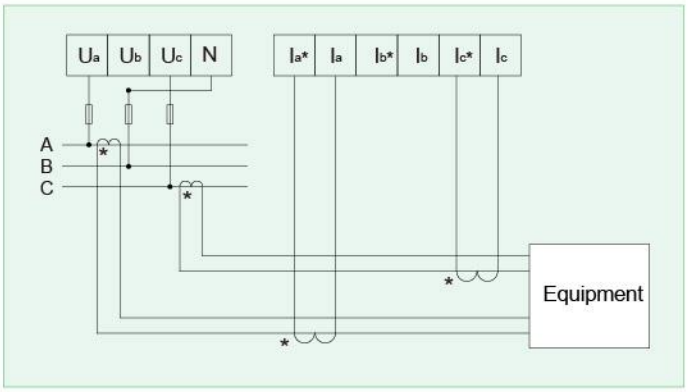

Three-phase four-wire

Voltage access via PT、ct

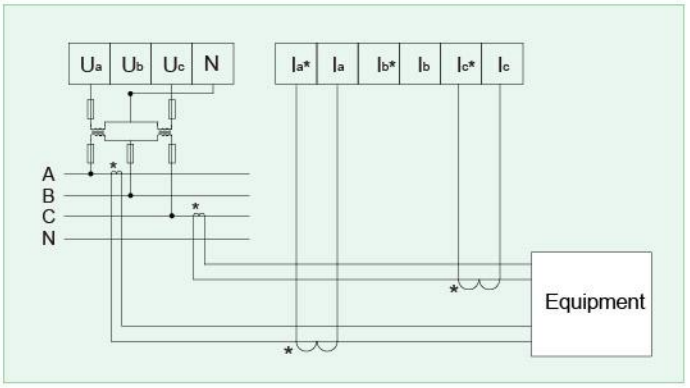

Three-phase three-wire

Voltage access via PT、ct

Display examples



■ Voltage

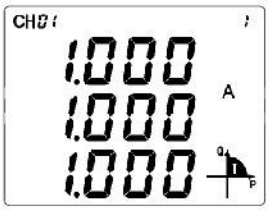

■ Current

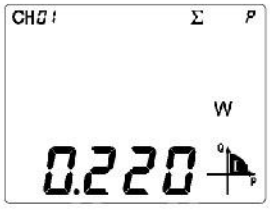

■ Power



■ Energy