ADW300 Wireless Energy Meter



ADW300 wireless meter is mainly used to measure three-phase active power in low-voltage network.

Technical Parameter

Input voltage	Nominal voltage	3*220/380V,3*380V,3*57.7/100V,3*100V
	Frequency	50Hz-60Hz
	Consumption	<10VA or 2W (A phase) 、 <0.5VA (B phase、C phase)
Input current	Maximum Current	6A
	Starting current	0.002A
	Consumption	<2VA
	Accuracy	Class 0.5S
	Temperature Accuracy	±2℃
Pulse	Width	80±20ms
	Constant	6400imp/kWh

Working Environment

Temperature	Operating	-25℃~55℃
	Storing	-40℃~70℃
Humidity	≤95%(No condensation)	
Altitude	<2000m	

Product Functions

Function	Description
LCD display	8 digits
Measurement of Energy	kWh (positive and negative)
	kvarh (positive and negative)
	A, B, C phase positive kWh
Electrical parameters	U、I、P、Q、S、PF、Hz
Harmonic	2~31ST voltage and current harmonic
Key programming	4 keys to communication and set parameters
Temperature measurement	A, B, C, N four-way temperature measurement (optional T)
DI /DO	4DI/2DO(Selection of K)
Residual current	1-channel
Communication	Infrared
	RS485 (Optional: C)
	470MHz Wireless Transmission (Optional: LR)
	GPRS Communication (Optional: 2G)
	NB-IOT Communication (Optional: NB)

Dimensions drawings

ADW300 Dimension Diagram

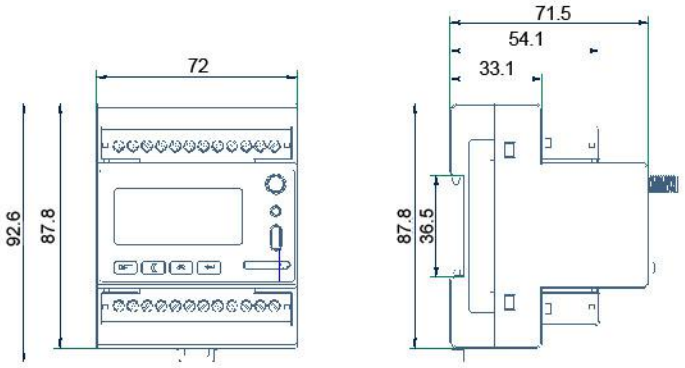

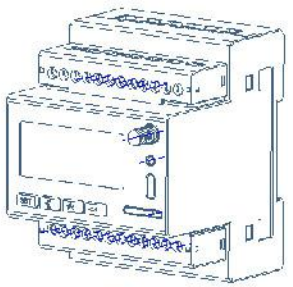

Wiring

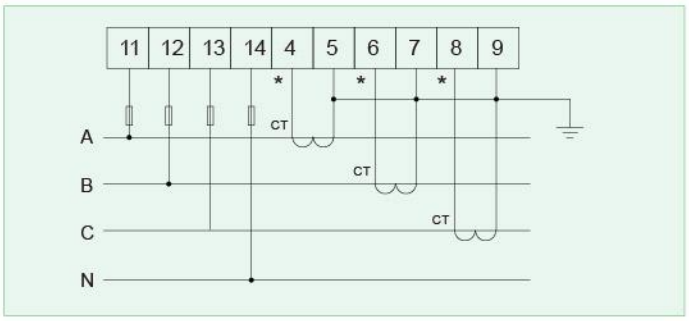

Three-phase four-wire

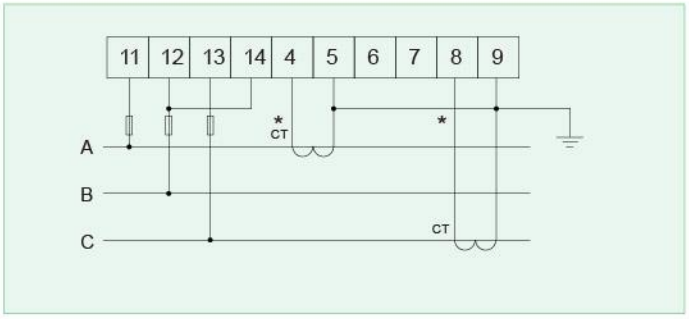

Three-phase three-wire

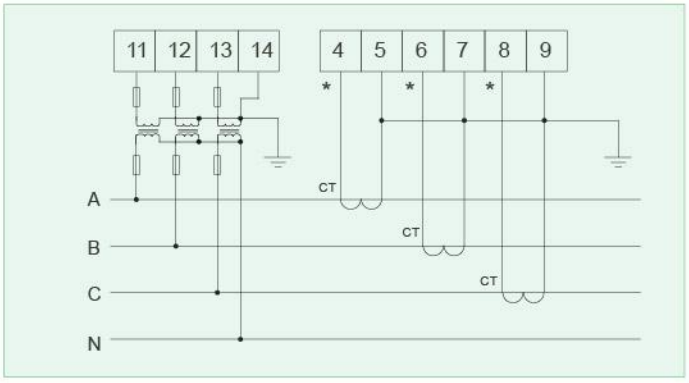

Three-phase four-wire
Voltage access via PT

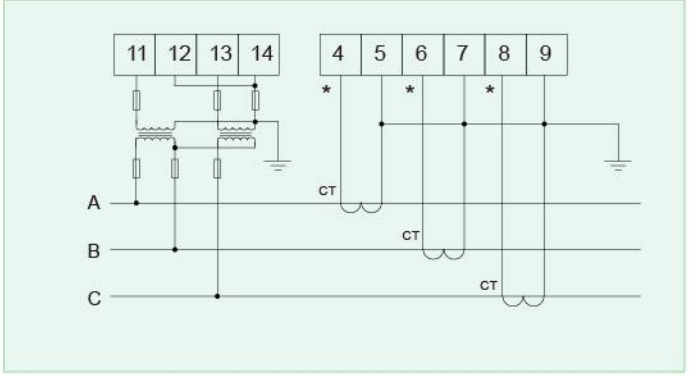

Three-phase three-wire

■ ADW300W Wiring instructions

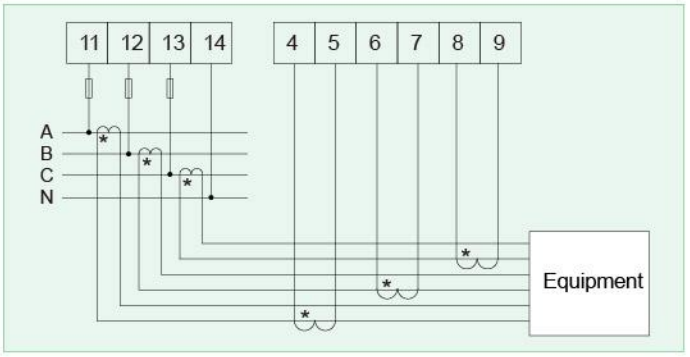

Three-phase four-wire

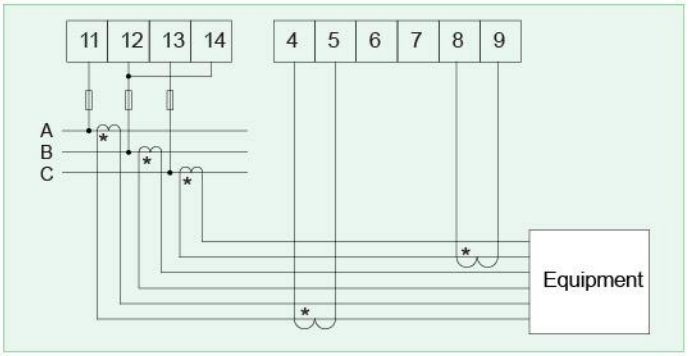

Three-phase three-wire

Display examples

■ Energy



■ Voltage



■ Current



■ Power

