AKH-0.66 II Current transformer

1.Product feature

Horizontal square hole type, they can pass through 1-6 bar bus and also pass through multiple cables. They are generally used with electrical measuring instruments, widely used in electrical sets.

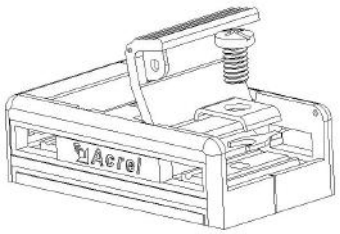

2. Explanation for type

AKH - 0.66 □ - II □ □

- Installation
- Rated current ratio
- Auxiliary Specifications
- Specifications
- Rated voltage,kV
- Code of product series

3. Spec. and size（mm，Tolerance ±1mm）

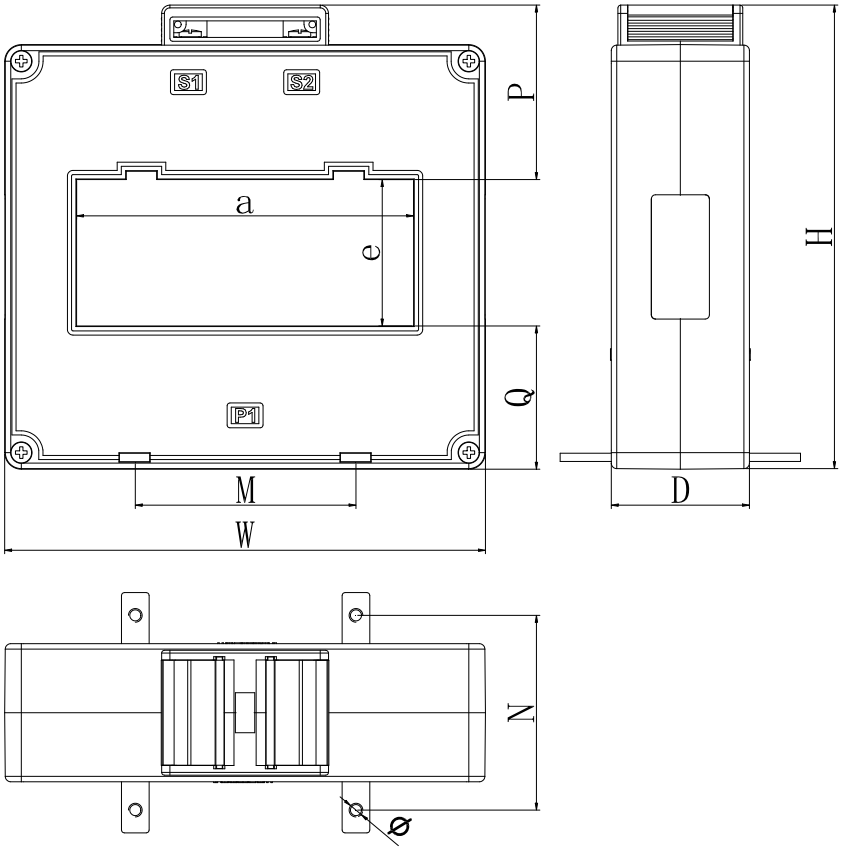

Acrel Co.,Ltd
Tel：0510-86179960 Fax：0510-86179835
Address：No31 HongtuRd,Nanzha Jiangyin Jiangsu E-mail：acrelct@email.acrel.cn

Size（mm） / Type	Outline size			Through size		Mounting size					Tolerance
	W	H	D	a	e	M	N	P	Q	Φ	
30II	62	98	45	32	32	28	57.5	36.5	29.5	5	±1
40II	79	103	45	43	31.5	48	57.5	43	28.5	5	
50II	87	113	45	52	32	30	57.5	45	36	5	
60II	102	125	45	61	33	42	57.5	50.5	41.5	5	
60×50II	102	142	45	62	51.5	42	57.5	51.5	39	5	
80II	117	119	45	82	32	60	57.5	48	39	5	
80×50II	120	141	45	82	52	60	57.5	49.5	39.5	5	
100II	145	125	45	103	35	80	57.5	49.5	40.5	5	
100×50II	145	155	50	103	55	80	70.5	57.5	42.5	5	
100×80II	152	190	55	104	85	80	70.5	59.5	45.5	5	
120×50II	174	168	50	122	53	80	70.5	63	52	5	
120×80II	160	193	60	122	72	54	70.5	68	53	5	
130×50II	176	160	50	135	55	85	70.5	59.5	45.5	5	
150×50II	210	176	55	155	55	103	70.5	70.5	50.5	5	
180×50II	240	181	60	185	55	40/40/40	83	70.5	55.5	5	
200×50II	247	172	55	205	60	102	83	63	49	5	
220×50II	280	190	60	225	55	65/55/65	83	73.5	61.5	5	
260×50II	320.5	191	60	264.5	54.5	65/55/65	83	75.5	61	5	
170×100II	227	230	60	172	105	103	83	70	55	5	
260×100II	308	226	63	265	103	181	83	69	54	5	

4. Cross-reference tables of spec. –parameter



Specification	Rated current ratio (A)	Precision degree and corresponding rated load (VA/Ω)			Straight-through tums	Bus spec(mm)/ number	Installation
		0.2	0.5	1			
30II	100/5(1)			1.5	1	30x10/1-2	A,C
	150/5(1)			1.5	1		
	200/5(1)		2.5		1		
	250/5(1)		3.75		1		
	300-450/5(1)		5		1		

Acrel Co.,Ltd
Tel：0510-86179960 Fax：0510-86179835
Address：No31 HongtuRd,Nanzha Jiangyin Jiangsu E-mail：acrelct@email.acrel.cn

	500/5(1)		10		1		
	600/5		10		1		
4011	100/5(1)			1.5	1	40×10/1-2	A,C
	150/5(1)			2.5	1		
	200/5(1)		2.5		1		
	250/5(1)		3.75		1		
	300-450/5(1)		5		1		
	500-800/5(1)		10		1		
	1000/5(1)	10			1		
5011	150			2.5	1	50×10/1-2	
	200-250/5(1)		2.5		1		
	300-450/5(1)		5		1		
	500-800/5(1)		10		1		
	1000-1250/5(1)	10			1		
	1500/5(1)	20			1		
6011	200-250/5(1)		2.5		1	60×10/1-2	C
	300-450/5(1)		5		1		
	500-800/5(1)		10		1		
	1000-1250/5(1)	10			1		
	1500-2000/5(1)	20			1		
	2500/5(1)	30			1		
60×5011	200-250/5(1)		2.5		1	60×10/1-3	D
	300-450/5(1)		5		1		
	500-800/5(1)		10		1		
	1000-1250/5(1)	10			1		
	1500-2000/5(1)	20			1		
	2500/5(1)	30			1		
8011	200-250/5(1)		2.5		1	80×10/1-2	
	300-450/5(1)		5		1		
	500-800/5(1)		10		1		
	1000-1250/5(1)	10			1		
	1500-2000/5(1)	20			1		
	2500-3000/5(1)	30			1		
80×5011	200-250/5(1)		2.5		1	80×10/1-3	
	300-450/5(1)		5		1		
	500-800/5(1)		10		1		
	1000-1250/5(1)	10			1		
	1500-2000/5(1)	20			1		
	2500-3000/5(1)	30			1		
10011	300-450/5(1)		5		1	100×10/1-2	
	500-800/5(1)		10		1		
	1000-1250/5(1)	10			1		
	1500-2000/5(1)	20			1		

Acrel Co.,Ltd
Tel：0510-86179960 Fax：0510-86179835
Address：No31 HongtuRd,Nanzha Jiangyin Jiangsu E-mail：acrelct@email.acrel.cn









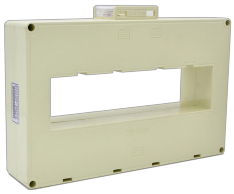

	2500-4000/5(1)	30			1		
100×50II	300-450/5(1)		5		1	100×10/1-3	
	500-800/5(1)		10		1		
	1000-1250/5(1)	10			1		
	1500-2000/5(1)	20			1		
	2500-4000/5(1)	30			1		
100×80II	600-800/5(1)		10		1	100×10/1-4	
	1000-1250/5(1)	10			1		
	1500-2000/5(1)	20			1		
	2500-4000/5(1)	30			1		
120×50II	500-800/5(1)		10		1	120×10/1-3	
	1000-1250/5(1)	10			1		
	1500-2000/5(1)	20			1		
	2500-5000/5(1)	30			1		
130×50II	600-800/5(1)		10		1	125×10/1-3 130×10/1-3 60×10/2-6	
	1000-1250/5(1)	10			1		
	1500-2000/5(1)	20			1		
	2500-5000/5(1)	30			1		
120×80II 150×50II	1000-1250/5(1)	10			1	120×10/1-4	D
	1500-2000/5(1)	20			1		
	2500-5000/5(1)	30			1		
170×100II	1500-2000/5(1)	15			1	170×10/1-3 100×10/3-6	
	2500-5000/5(1)	30			1		
180×50II	1200-2000/5(1)	10			1	180×10/1-3	
	2500-5000/5(1)	30			1		
200×50II 220×50II 260×50II	1500-2000/5(1)	20			1	200×10/1-3 100×10/4-6	
	2500-5000/5(1)	30			1		
260×100II	1200-1500/5(1)	10			1	250×10/2-5 125×10/4-10	
	1500-2000/5(1)	20			1		
	2500-6300/5(1)	30			1		

5. Technical indicators

- Rated operation voltage AC 0.66kV(Equivalent AC 0.69kV,GB156-2017)
- Rated frequency 50-60Hz
- Ambient air temperature -30℃-70℃
- Height above sea level≤3000m
- Power frequency withstand voltage 3000v/1min 50Hz
- Used in place without direct rain and snow,without severe pollution and acute shock

Acrel Co.,Ltd
Tel：0510-86179960 Fax：0510-86179835
Address：No31 HongtuRd,Nanzha Jiangyin Jiangsu E-mail：acrelct@email.acrel.cn

6. Installation

A:



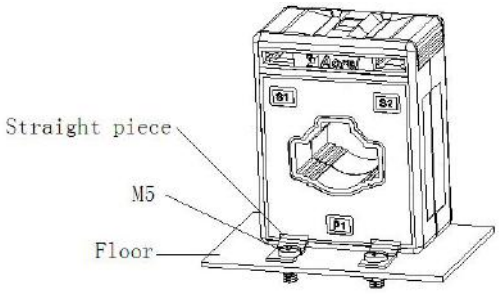

C:



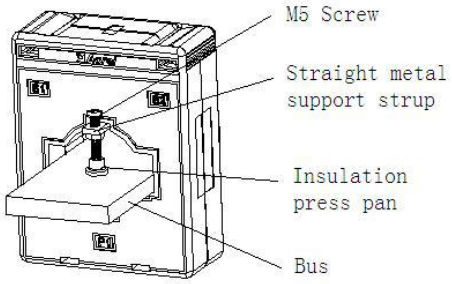

D:



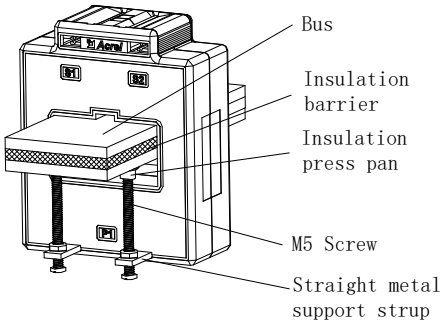

7. Design and test standards

No.	Name	Testing condition	Measuring instrument	Product Verification Cycle	Product testing standards
1	Surface, Terminal mark	Temperature: 20-25℃ Humidity: 50-65%	HLS-50G2 Standard Current Transformer、HES-1 Digital Transformer Verification FY47 Current Transformer Load Cases FY49Current Transformer Load Cases LK2673 Withstand Voltage Tester ZC25-4 Insulation Resistance Shaking Instrument	2 Years	GB 20840.2-2014 《Current Transformer》 JJG313-2010 Verification Procedure
2	Power frequence Withstand voltage				
3	Insulation resistance				
4	Error testing				

Acrel Co.,Ltd
Tel：0510-86179960 Fax：0510-86179835
Address：No31 HongtuRd,Nanzha Jiangyin Jiangsu E-mail：acrelct@email.acrel.cn