AKH-0.66 M8 型电流互感器规格书

AKH-0.66 M8 current transforemer

1. 产品特点 Product feature

一次电流较小，容量 2.5VA 及以下用于测量或保护，多用于低压抽屉柜等小空间场所。

Primary current is small,capacity 2.5VA and below for measuring or protection,and more used for small space such as low voltage draw-out cabinet etc.

2. 型号说明 Ecplanation for type

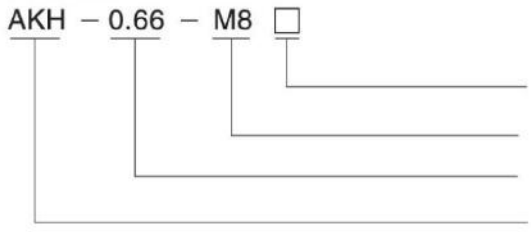

Rated current ratio
Auxiliary Specifications(direct)
Rated voltage,kV
Code of product series

3. 规格尺寸 Spec. and size(mm)

尺寸 Size / Type 规格型号	外形尺寸 Outline size			穿孔尺寸 Through size			安装尺寸 Mouting size		公差 Tolerance	图形 Figure
	W	H	D	Φ	a	e	M	N		
M8	67	86	30	/	/	/	70.8	80.5	±1	图 1 Fig.1
双 M8	67	86	56	/	/	/	70.8	80.5		图 2 Fig.2

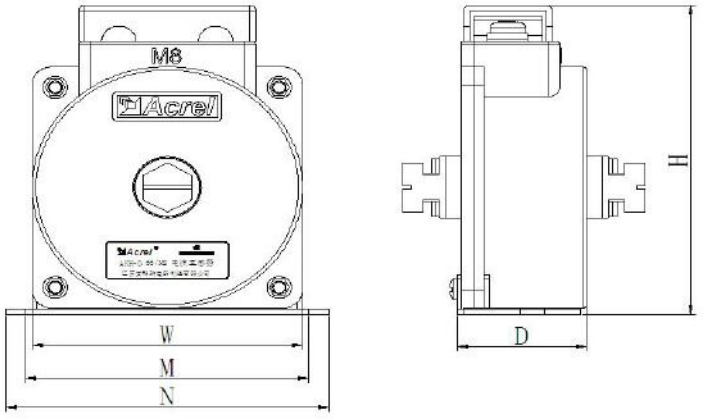

图 1
Fig.1

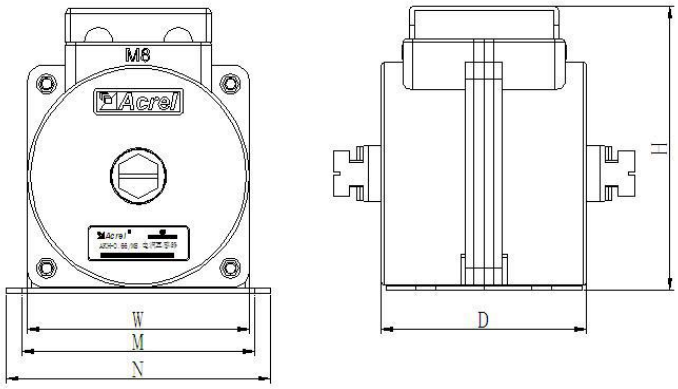

图 2
Fig.2

4. 规格参数 parameter



规格 Specification	ratio（A）	Precision degree and corresponding rated load (VA)					Straight-through tums	Installation
		0.2S	0.5S	0.2	0.5	1		
M8	5-100/5(1)					2.5	direct	H
双 M8	5-100/5	1.5	1.5	1.5				

5. Technical indicators

- Rated operation voltage AC 0.66kV
- Rated frequency 50-60Hz
- Ambient air temperature -30℃-70℃
- Height above sea level≤3000m
- Power frequency withstand voltage 3000v/1min 50Hz
- Used in place without direct rain and snow,without severe pollution and acute shock

6. 安装示意图 Installation

H：

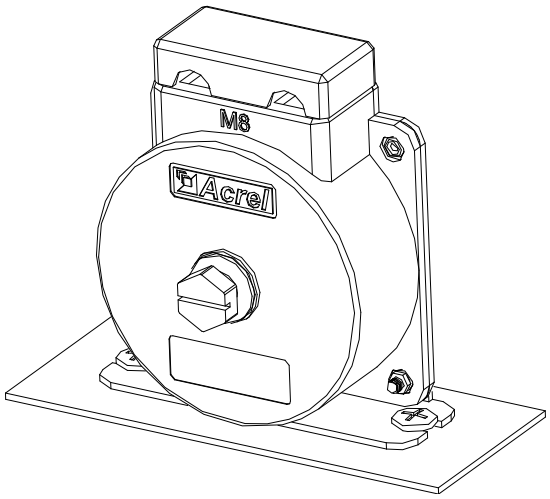

H:Fixed by fixed plate

7. Design and test standards

No.	Name	Testing condition	Measuring instrument	Product Verification Cycle	Product testing standards
1	Surface,Terminal mark	Temperature:20-25℃ Humidity: 50-65%	HLS-50G2 Standard Current Transformer、HES-1 Digital Transformer Verification FY47 Current Transformer Load Cases FY49Current Transformer Load Cases LK2673 Withstand Voltage Tester ZC25-4 Insulation Resistance Shaking Instrument	2 Years	IEC 61869-2:2012,MOD

总部：安科瑞电气股份有限公司
地址：上海市嘉定区育绿路 253 号 201801
传真：(86)021-69158303
服务热线：800-820-6632
Headquarter: Acrel Co., Ltd.
Addr：No. 253 Yulv Road, Jiading District, Shanghai (PC: 201801)

生产基地：江苏安科瑞电器制造有限公司
地址：江阴市南闸街道东盟路 5 号 214405
Production Base: Jiangsu Acrel Electrical Manufacture Co., Ltd.
Addr：No.5 Dongmeng Road Dongmeng Industrial Park Nanzha town Jiangyin (PC：214405)
Tel：(86) 0510-86179966
Fax：(86) 0510-86179975
E-mail: sales@email.acrel.cn