076

Medical IT System Insulation Monitoring Devices

(Five-Piece Set)

Installation and Operation Manual V2.5

Acrel Co., Ltd.

Declaration

Please read this manual carefully before using this series of products, in which the involved pictures, logos, symbols, etc. are all reserved by the Acrel Electric Co., Ltd. Personnel not inside the company shall not publicly reprint all or part of the contents without written authorization.

Before using the IT system which is made up of this series of products, please read the tips and precautions in this operation manual, and Acrel does not take responsibility for personal injuries or economic losses caused by ignoring tips of this manual;

Transformers and related insulation monitors are professional electrical equipment, and any relevant operation needs to be carried out by specialized electrical technicians. Acrel does not take responsibility for personal injuries or economic losses caused by improper operations of non-professionals.

The contents of the manual will be continuously updated and revised, thus the products functions in this manual may inevitably have a slight discrepancy with the real objects during the continuous upgrading process. Users should give first place to the purchased real products, and can search www. acrel.cn to downloads or through sales channels to obtain the latest version of the manual.

Revision history

Number of times	Revision date	Versions after revision	Reasons for revision
01	2016.1.20	V2.0	On the basis of the original insulation monitoring products, the contents of all five pieces of products are integrated to replace the instructions of each sub-product.
02	2016.10.25	V2.1	Some errors have been fixed
03	2016.11.7	V2.2	The overview added "products conform to Enterprise standards Q31/0114000129C013-2016 *IT System Insulation Monitoring Instrument"* .
04	2020.4.1	V2.3	Remove discontinued models from the five-piece set and make adjustments and updates where necessary
05	2020.6.11	V2.4	Added panel installation schematic for AID120/150
06	2020.8.14	V2.5	Correct errors and omissions, adjust the wording
Note:			

contents

1 Introduction.....1

2 Function features.....2

2.1 Function features of AITR series medical isolation transformer.....2

2.2 Function features of AIM-M100.....3

2.3 Function features of AID120/150.....3

2.4 Function features of ACLP10-24.....4

2.5 Function features of AKH-0.66P26 current transformer.....4

3.Reference standard.....4

4 Technical parameters.....4

4.1 Technical parameters of AITR series medical isolation transformer.....4

4.2 Technical parameters of AIM-M100 medical insulation monitor.....6

4.3 Technical parameters of AID120/AID150.....7

4.4 Technical parameters of ACLP10-24.....7

4.5 Technical parameters of AKH-0.66P26 current transformer.....8

5Installation and wiring.....8

5.1 Shape and mounting hole size.....8

5.2 Installation method.....10

5.3 Wiring method.....13

5.4 Typical wiring diagram.....16

5.5 Considerations.....17

6 Programming and application.....18

6.1 Panel description.....18

6.2 LED indicator instructions.....18

6.3 Button function descriptions.....19

6.4 Button operation descriptions.....20

7 Communication protocol.....28

7.1 Modbus-RTU communication protocol.....28

7.2 Introduction to the function code.....28
7.3 AIM-M10 parameter address table.....30
8 Typical applications.....32
8.1 Application of five-piece set of medical IT system insulation monitoring products in operating room.....32
9 Power on and debugging instructions.....33
9.1 Wiring check.....33
9.2 Common faults and eliminations.....34
9.3 Settings and debugging.....35

Medical IT System Insulation Monitoring Devices

1 Introduction

Medical IT systems are primarily used in critical medical 2 locations such as operating rooms, ICU/CCU intensive care units to provide safe, reliable, and continuous distribution of critical equipment in these locations. Medical insulation monitoring products are developed by Ankore Electric according to the special requirements of insulation resistance of distribution system in medical 2 type places with many years of design experience in the power meter industry. It can be used for isolating power system in various operating rooms and intensive care units in medical places, realizing real-time monitoring of system insulation, load, isolation transformer temperature and other operating conditions, as well as remote monitoring. Products comply with the enterprise standard Q31/0114000129C013-2016 *IT System Insulation Monitor* provisions.

Insulation monitoring products of medical IT system (five-piece set) include AITR series medical isolation transformer, AIM-M100 medical intelligent insulation monitor, AKH-0.66P26 current transformer, ACLP10-24 dc power module for instrument and AID series (AID120, AID150) external alarm and display instrument, etc., as shown in Table 1.

Table 1 Medical IT System Insulation Monitoring Products

Type	Picture	Description
AITR series medical isolation transformer		AITR series isolation transformer is specially used in medical IT system. The windings are treated with double insulation and have electrostatic shielding layer, which reduces electromagnetic interference between windings. The PT100 temperature sensor is installed in the wire bag to monitor the temperature of transformer. The whole body is treated with vacuum invasion paint, which increases mechanical strength and corrosion resistance. The product has good temperature rise performance and very low noise.
AIM-M100 medical intelligent insulation monitoring instrument		The AIM-M100 medical intelligent insulation monitor is compact in size, easy to install, intelligent, digital and networked, and is an ideal choice for insulation monitoring of isolation power supply systems in operating rooms, intensive care units and other medical places.

AKH-0.66P26 current transformer			The AKH-0.66P26 type current transformer is the protective current transformer supporting the AIM-M100 insulation monitor, of which the maximum measurable current is 60A and the transformation ratio is 2000:1. The current transformer is directly fixed inside cabinet by screwing, and the secondary side is leaded out by the terminal, which is convenient to install and use.
ACLP10-24 dc power module			Special DC module for instrument, stable output voltage. The module adopts the standard guide way to install, and can be installed on the same guide way with the insulation monitor, easy to install.
AID series external alarm and display instrument	AID120		It is suitable for wall installation embedded in operating room or nurse station and can monitor 1 AIM-M100 insulation monitor. It has sound and light alarm function of insulation, overload, overtemperature and equipment failure, digital tube display and RS485 communication
	AID150		LCD display, RS485 bus, centralized monitoring of up to 16 SETS of AIM-M100 medical intelligent insulation monitor data, sound and light alarm can be remote. The AID150 can also monitor data from multiple AIM-R100 residual current monitors.

2 Function features

2.1 Function features of AITR series medical isolation transformer

- The transformation ratio between the primary and secondary windings is 1:1.
- Double insulation treatment is adopted between the windings, and the electrostatic shielding layer is designed.
- The PT100 temperature sensor is installed in each wire packet to monitor the temperature of the isolation transformer.
- Used for the transformation of TN system into IT system (ungrounded system) after isolation transformer.

2.2 Function features of AIM-M100

- Functions of real-time monitoring and fault alarming of the ground insulation resistance, transformer load current and transformer winding temperature of the monitored IT system.
- Can be used with insulation fault locator, remotely starting fault-locating and displaying locating results when there are insulation faults.
- Real-time monitor the line disconnection fault, temperature sensor disconnection fault and the functional grounding line disconnection fault of the monitored system, and give the alarm indication when the fault occurs.
- Relay alarm output, LED alarm indication and other faults indication functions.
- Two kinds of fieldbus communication technology, which are used for centralized alarm and display instrument, test signal generator, insulation fault locator and upper computer management software communications, and can monitor the operation status of IT system in real time.
- With event recording function, it can record the time and fault type of the alarm, which is convenient for operators to analyze the system operation status and eliminate the fault in time.
-

2.3 Function features of AID120/150

- The insulation resistance alarm value, load current alarm value and transformer temperature alarm value of the system can be set remotely.
- When the system appears insulation fault, overload, transformer temperature over limit and wiring fault, alarm and display instrument gives out the corresponding sound and light alarm, and has the function of eliminating sound alarm.
- Using advanced fieldbus technology, the remote monitoring function can be realized by real-time data interaction with the insulation monitor.

Table 2 Functional Description of AID Series Products

Model	Selection Description
AID120	It can monitor one set of AIM-M100 insulation monitor and be used for installation by embedding into wall. It can be applied to monitor operating room or ICU only using single set of isolated power.
AID150	It can monitor 16 sets of AIM-M100 insulation monitoring instruments to the maximum and AIM-R100 residual current monitor which can be used for installation by embedding into wall. It is fit for the centralized monitoring on operating room or ICU or other medical sites.

2.4 Function features of ACLP10-24

- To employ isolated linear transformer with the characteristics of strong capacity of resisting disturbance and small ripple etc.
- AC 220V input, DC 24V output, with max output power of 3 W.
- Used for the DC 24V power supply for AID series centralized alarm and display instrument and other instruments.

2.5 Function features of AKH-0.66P26 current transformer

- The maximum measurable current is 60A, and the transformation change ratio is 2000:1.
- Work with the AIM-M100 insulation monitoring instrument to measure the load current of isolation transformer.

3. Reference standard

- IEC 60364-7-710: 2002 *Building electrical installations section 7-710: Requirements for special installations or locations----medical locations*;
- IEC 61557-8-2014 *Electrical safety of low voltage distribution system below AC 1000V and DC 1500V, Test, measurement or monitoring equipment for protection test section 8: Insulation monitoring device for IT systems*;
- IEC 61557-9-2014 *Electrical safety of low voltage distribution system below AC 1000V and DC 1500V, Test, measurement or monitoring equipment for protection test section 9: insulation fault positioning equipment for IT systems*;
- JGJ 16-2008 *Code for electrical design of civil buildings*;
- IEC61558-1: 2009 *Safety of power transformers, power supplies, reactors and similar products section 1: General requirements and tests*;
- IEC61558-2-15: 2011 *Safety of power transformers, power supplies and similar products section 16: Special requirements for isolation transformers for power supply in medical locations*.

4 Technical parameters

4.1 Technical parameters of AITR series medical isolation transformer

Refer to Table 3.

Table 3 Technical Parameters of AITR Series of Medical Isolation Transformer

Type	AITR10000	AITR8000	AITR6300	AITR5000	AITR3150
Insulation class	H	H	H	H	H
Protection class	IP00	IP00	IP00	IP00	IP00
Power / voltage					

/ current					
Rated power	10000VA	8000VA	6300VA	5000VA	3150VA
Rated frequency	50-60Hz	50-60Hz	50-60Hz	50-60Hz	50-60Hz
Rated input voltage	AC230V	AC230V	AC230V	AC230V	AC230V
Rated input current	45.3A	36A	28.5A	22.5	14.2A
Rated output voltage	AC230V/115V	AC230V/115V	AC230V/115V	AC230V/115V	AC230V/115V
Rated output current	43.5A	34.7A	27.4A	21.7	13.7A
Inrush current	<12In	<12In	<12In	<12In	<12In
Leakage current	<200μA	<200μA	<200μA	<200μA	<200μA
No load input current	1.359A	1.08A	0.855A	0.675A	0.426A
No load output voltage	235V±3%	235V±3%	235V±3%	235V±3%	235V±3%
Short circuit voltage	<6.9V	<6.9V	<6.9V	<6.9V	<7.5V
General parameters					
Fuse wire	80A	63A	50A	35A	25A
Primary winding resistance	<55mΩ	<64mΩ	<80mΩ	<131 mΩ	<245mΩ
Secondary winding resistance	<45mΩ	<64mΩ	<80mΩ	<116 mΩ	<228mΩ
Iron loss	<150W	<105W	<107W	<77W	<55W
Copper loss	<230W	<200W	<170W	<125W	<120W
Efficiency	>96%	>96%	>96%	>96%	>95%
Maximum ambient temperature	<40℃	<40℃	<40℃	<40℃	<40℃
No-load temperature rise	<36℃	<33℃	<31℃	<26℃	<22℃
Full load temperature rise	<65℃	<76℃	<67℃	<62℃	<55℃
Noise grade	<40dB	<40dB	<40dB	<40dB	<40dB

4.2 Technical parameters of AIM-M100 medical insulation monitor

Refer to Table 4.

Table 4 Technical Parameters of AIM-M100 Medical Intelligent Insulation Monitoring

Auxiliary power supply	Voltage	AC220V (fluctuating range±10%)	Temperature measurement	Thermistor	PT100
	Frequency	50/60Hz		Measuring range	-50—+200℃
	Maximum power consumption	<8W		Alarm value scope	0—+200℃
Insulation monitoring	Measuring range of insulation resistance	10-999kΩ	Alarm output	Output mode	2-route relay output(programmable)
	Absolute percentage error	0—±10%		Contact capacity	AC 250V/3A DC 30V/3A
	Alarm value scope	50—999kΩ	Environment	Operating temperature	-10—+55℃
	Response time	<2s		Storage temperature	-20—+70℃
	Measuring voltage	<12V		Relative humidity	5%-95%, non-condensate
	Measuring current	<50uA		Altitude	≤2500m
Load current	Measuring range	2.1-50A	Communication		RS485 interface, Modbus-RTU agreement

	Alarm value scope	5-50A	Rated impulse voltage/pollution degree	4KV/III
	Measuring accuracy	≤±5%	EMC electromagnetic compatibility/electromagnetic radiation	Conform to IEC 61326-2-4

4.3 Technical parameters of AID120/AID150

Refer to Table 5.

Table 5 Technical parameters of AID120/150

Parameter \ Type		AID120	AID150
Auxiliary power supply	Voltage	DC 24V	
	Consumption	< 0.6W	
Display range of insulation resistance		0—999kΩ	——
Insulation alarming range		50—999kΩ	——
Transformer load rate display		Percentage display	——
Load current alarm setting		14A、18A、22A、28A、35A、45A	
Temperature alarm setting range		0~+200℃	
Alarm method		Sound-light alarm	
Alarm type		Insulation failure, overload, overheat, equipment failure	
Communication mode		RS485, MODBUS-RTU	
Display mode		Digital display	128×64 LCD display

4.4 Technical parameters of ACLP10-24

Refer to Table 6.

Table 6 Technical parameters of ACLP10-24

Input voltage	AC 220V(fluctuating range±10%)
Frequency	50/60Hz
Power	3W
Output voltage	DC 24V±5%
Voltage regulation factor	≤30%
Temperature rise	≤20℃
Dielectric intensity	4000V AC/minute

4.5 Technical parameters of AKH-0.66P26 current transformer

Refer to Table 7.

Table 7 Technical Parameters of AKH-0.66P26 Current Transformer

Input current	0.5mA～50A		Frequency range	0.02-10 kHZ
Output current	0.025～25 mA		Loading resistance	<200Ω
Temperature coefficient	100 ppm/℃		Transient current (1s)	200A
Phase displacement	10′		Installation	Fixed with 4×10 screws
Operating temperature	-35～+70℃		Secondary wiring	Single core >0.75mm^2, Maximum length of 1 meter
Storage temperature	-40～+75℃			Single core twisted pair, 0.75mm^2, Maximum length of 10 meters
Secondary resistance range	95～120Ω		Isolation pressure	5000Vac
Accuracy	0.5%		Linearity	0.5%

5Installation and wiring

5.1 Shape and mounting hole size

5.1.1 External dimensions of AITR series medical isolation transformer (unit: mm)

Shape structure and size of AITR series medical isolation transformer are shown as below and in Table 9 (unit: mm)

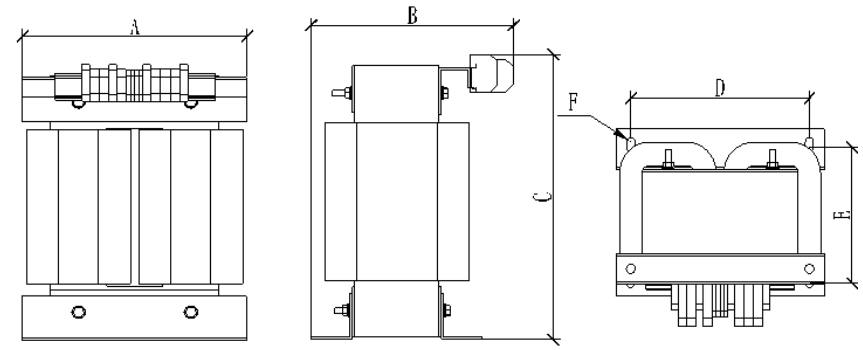

External dimensions of AITR series medical isolation transformer

Table 9 External Dimensions of AITR Series Medical Isolation Transformer

Type	Capacity (VA)	A(mm)	B(mm)	C(mm)	D(mm)	E(mm)	F(mm)	Total weight
AITR10000	10000	280	275	427	240	190	Φ11	92
AITR8000	8000	280	265	427	240	190	Φ11	90
AITR6300	6300	280	255	427	240	175	Φ11	75
AITR5000	5000	280	255	427	240	175	Φ11	73
AITR3150	3150	280	225	427	240	175	Φ11	53

5.1.2 External dimensions of AIM-M100 medical insulation monitor (unit: mm)

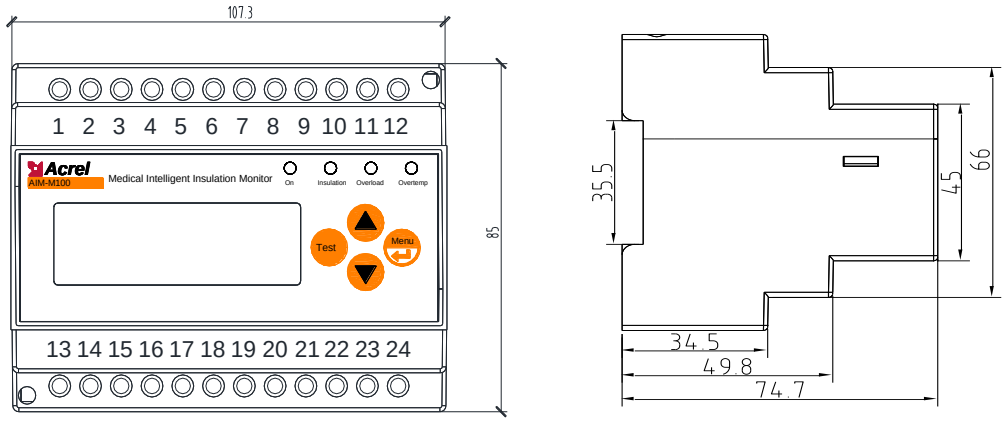

Front view Side view

5.1.3 External dimensions of ACLP10-24 (unit: mm)

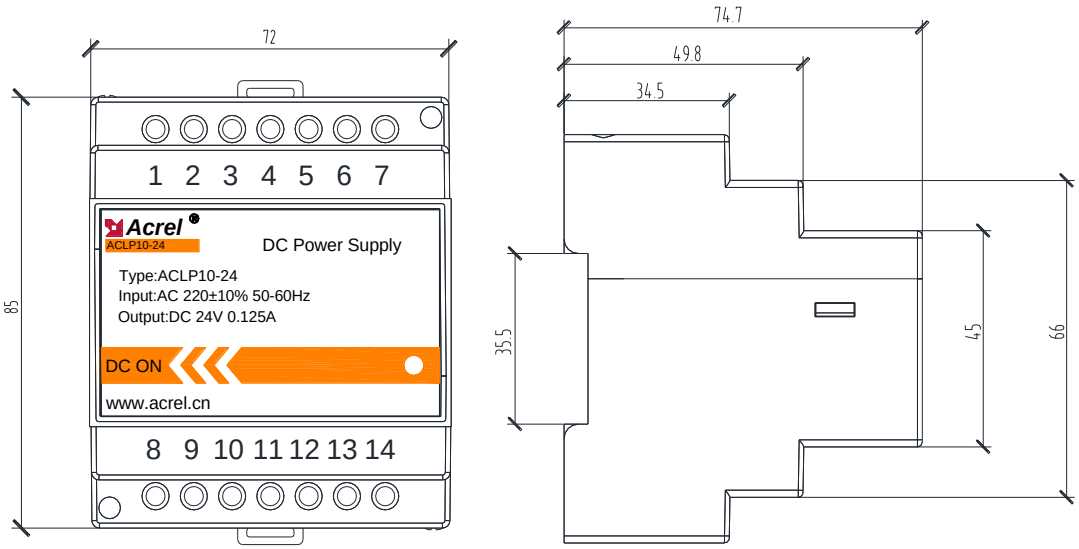

Front view Side view

5.1.4 External dimensions of AID120/AID150 (unit: mm)

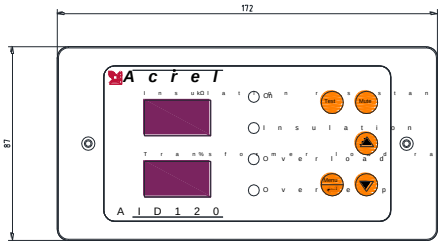

AID120 front view

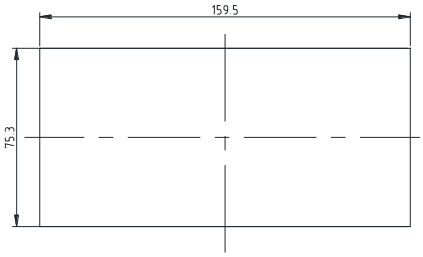

AID120 hole size

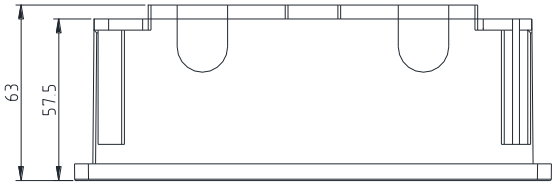

AID120 side view

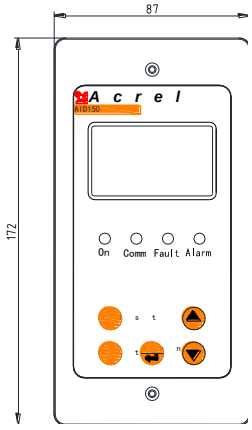

AID150 front view

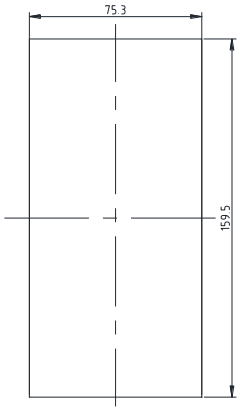

AID150 hole size

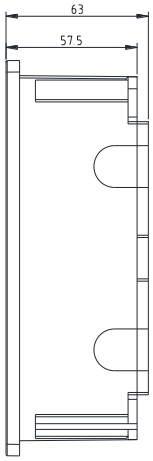

AID150 side view

5.1.5 External dimensions of AKH-0.66P26 current transformer (unit: mm)

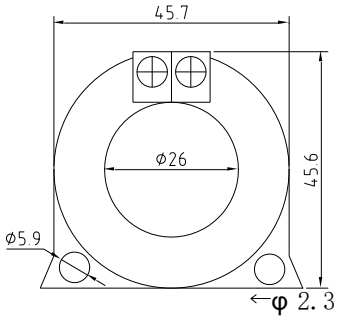

Front view

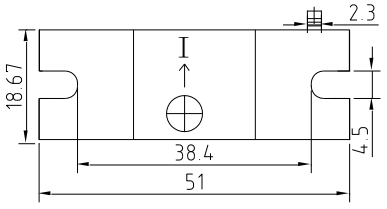

Bottom view

5.2 Installation method

In addition to the AID series external alarm and display instrument, the five-piece insulation monitoring products of medical IT system should be centrally installed in the distribution cabinet (isolated power cabinet). The isolation transformer should be installed at the bottom of the distribution cabinet, fixed with supporting bolts, and cooling fan should be installed. The instrument and circuit breaker are mounted on the upper panel. If the isolation transformer is

installed separately, it should not be too far from the AIM-M100 insulation monitor. When the AID120/150 external alarm and display instrument is used in the operating room, it can be embedded in the wall and installed next to the information panel in the operating room for the convenience of manual medical personnel. When AID150 is used in ICU/CCU and other intensive care units, it should be installed in the hand nurse station for the nurses on duty to check, and the RS485 communication between each insulation monitoring instrument, AID centralized alarm and display instrument under centralized monitoring should be connected hand in hand. The external wiring of the AID series external display device includes two 24V power lines and one RS485 communication line with 2-core shielded twisted pair. These three lines are drawn from the isolated power cabinet, and pipelines should be reserved during construction.

5.2.1 Installation mode of AIM-M100 medical insulation monitor

AIM-M100 insulation monitor adopts the installation method of the guide rail, and the fixation mode is the clip buckle type, as shown in the following figure:

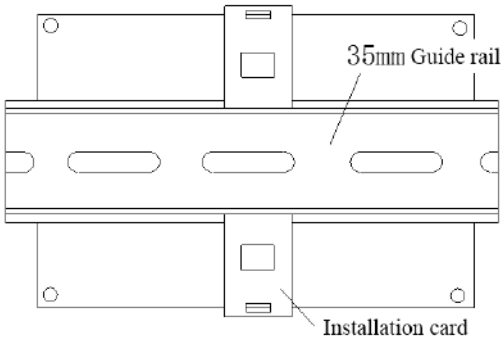

5.2.2 Installation method of ACLP10-24 power module

ACLP10-24 power module is installed by guide rail and fixed by clip-on, which can also be installed at the same guide rail as AIM-M100 monitoring instrument.

5.2.3 Installation mode of AID series alarm and display instrument

1) The shell of AID120/150 is the same. If you choose to embed the wall for installation, the installation diagram is as follows (taking AID150 as an example):

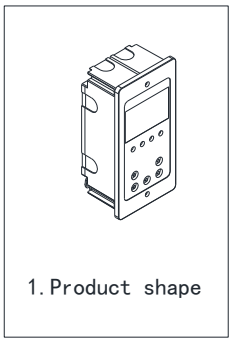

1. Product shape

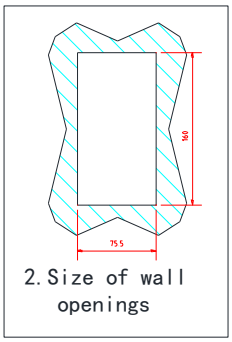

2. Size of wall openings

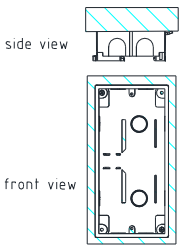

3. Insert the shell into the wall

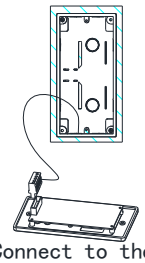

4. Connect to the LCD board through the terminal

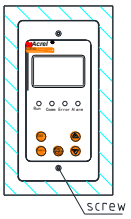

5. Fixed LCD board and Shell

Attention:

As our products are constantly updated, this drawing is for reference only until it has been confirmed by the relevant personnel.

During the decoration, firstly the AID120/150 shell should be embedded in the wall to be fixed and be close to the knockouts of the pipeline, so that the wires (two power cords + a two-core shielded twisted pair) can be drawn to the front cover, and then fix the cover on the shell with screws.

2) If the AID120/150 external alarm and display instrument is installed by opening the cabinet door, the installation diagram is as follows (taking AID150 as an example)

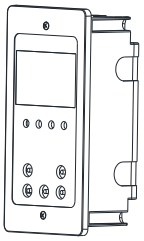

AID150 shape

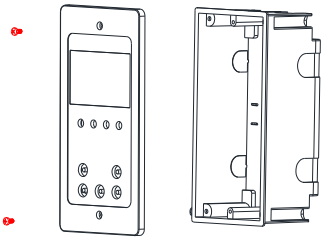

Separate the product body from the cassette

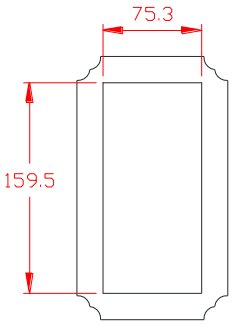

Hole size of door panel

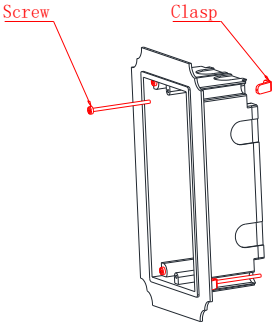

Install the cassette on the door panel

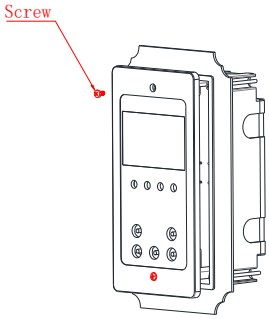

Fix the panel to the cassette

Attention:

As our products are constantly updated, this drawing is for reference only until it has been confirmed by the relevant personnel.

5.3 Wiring method

5.3.1 Wiring mode of AITR series medical isolation transformer

The input terminals at the transformer terminal blocks are labeled with “PM”, in which two terminals 0 and 230 are connected to the input 220V single-phase AC. The output terminals are labeled with “SEC”, in which the output voltage of two terminals 0 and 230 is AC 220V and is connected to external field load. The S terminal is connected to the PE bus bar on the spot (or the equipotential terminal line). Two ST terminals are temperature sensor interfaces, which are respectively connected to the No.11 and 12 terminals of AIM-M100 insulation monitoring instrument.

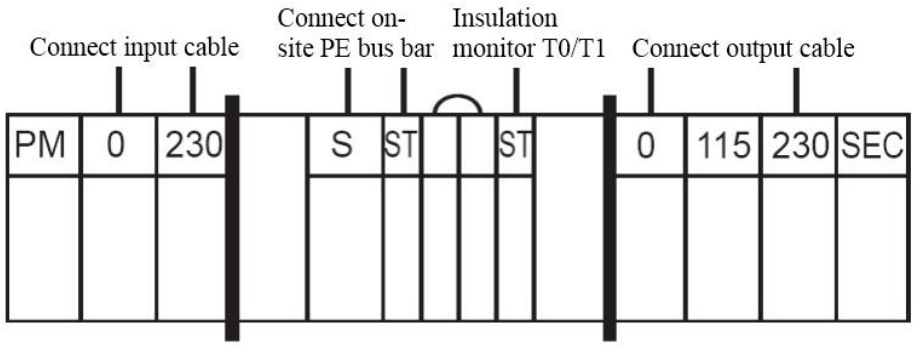

Figure 2 AITR series medical isolation transformer terminal blocks diagram

Note: The wirings of input and output terminals of the isolation transformer should select the copper wires matching the line diameter based on the isolation transformer rated input and output current (refer to tables in section 5.4). S terminal wiring can select 2×4mm^2 yellow-green wire. The wiring of two ST terminals can select 2×1.5mm^2 shielded twisted pairs, and the wiring should not be too long.

5.3.2 Wiring mode of AIM-M100

Upper row terminals: U1, U2 for the auxiliary power supply, and L1, L2 are connected to the monitored IT system (which can be connected with U1 and U2 in parallel, and then connected to the two output terminals of isolation transformer). I0, I1 for the current transformer signal input, and T0, T1 as the temperature sensor signal input.

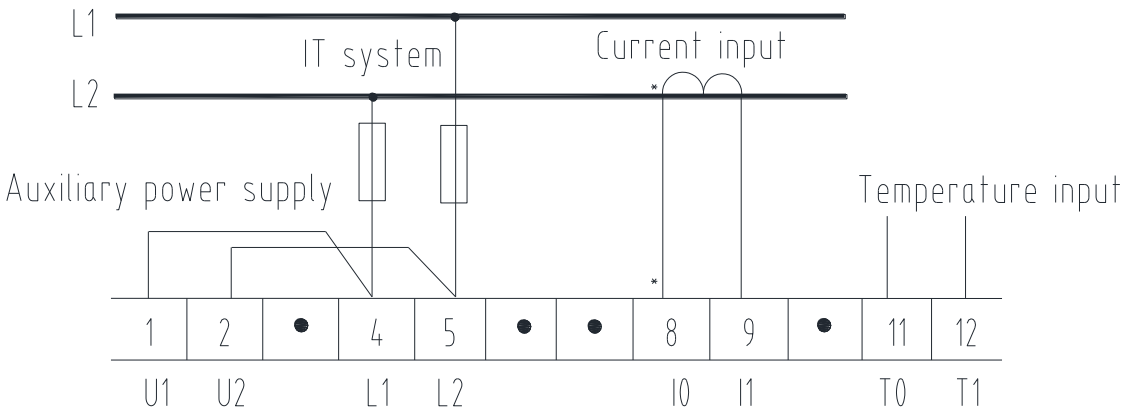

Lower row terminals: FE,KE are respectively connected to the field equipotential grounding terminal block, A1,B1 are the communication terminals with the upper computer, A2,B2 are the communication terminals with the external alarm and display instrument, J1 is the over temperature alarm output (used to control the cooling fan), and J2 is the output of the fault alarm relay.

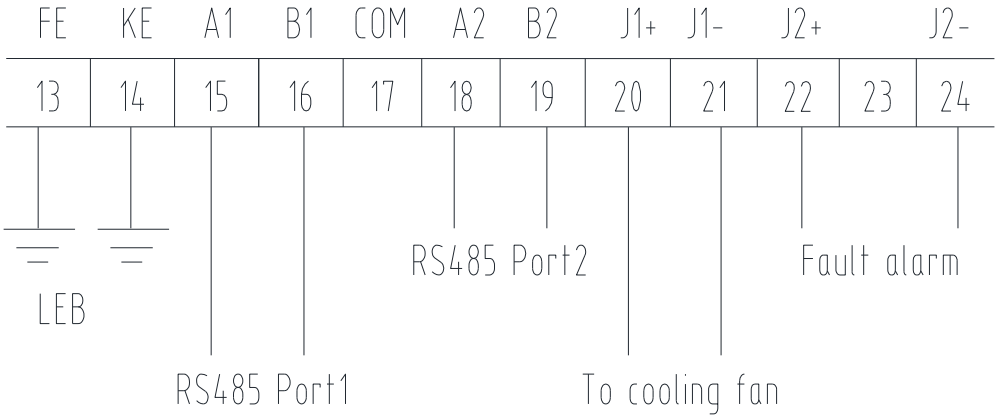

Note:

1)  is used for the test terminals of CT secondary side short connection.

2) Do not install the insulation monitor upside down during installation, so as to prevent the auxiliary power supply of terminals 1 and 2 connected to the normally closed contacts 23 and 24 of the relay by mistake, which may cause the instrument to burn out after being powered on.

3)The wirings connecting the No.1 and 2 terminals of the insulation monitor can select 2×1.5mm^2 copper wires, and the L1 and L2 terminals corresponding to the No.4 and 5 can select 2×1.5mm^2 copper wires, and the FE and KE terminals corresponding to the No.13 and 14 can select 2×4mm^2 yellow-green wires (grounding wires). J1, J2 relay output are the dry nodes, which need additional power supply during the control of external load. For example, J1 controls AC 220V cooling fan, then the AC 220V power supply is needed, and the wiring line type should be determined according to the load current.

4) 2×1.5mm^2 shielded twisted pair cable can be selected for current transformer signal line corresponding to terminals 8 and 9, temperature signal line corresponding to terminals 11 and 12, RS485 communication line corresponding to terminals 15 and 16, and RS485 communication line corresponding to terminals 18 and 19. The COM port for communication does not need wiring

5.3.3 Wiring mode of AID120/150 centralized alarm and display instrument

A and B are connected with A2 and B2 in the lower terminal of AIM-M100. The terminals of the power supply correspond to the positive pole and ground of the 24V DC power module respectively. The wiring diagram is shown in the following figure.

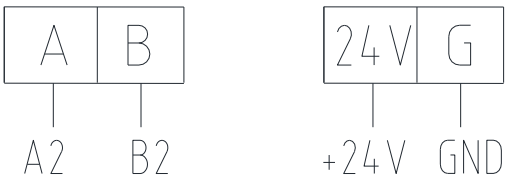

RS485 communication Auxiliary power supply

The 24V power supply can be connected by multiple copper wires of 2 x 1.5mm2, and the RS485 communication terminal can be connected by shielded twisted pair of 2 x 1.5mm2.

5.3.4 Wiring mode of ACLP10-24

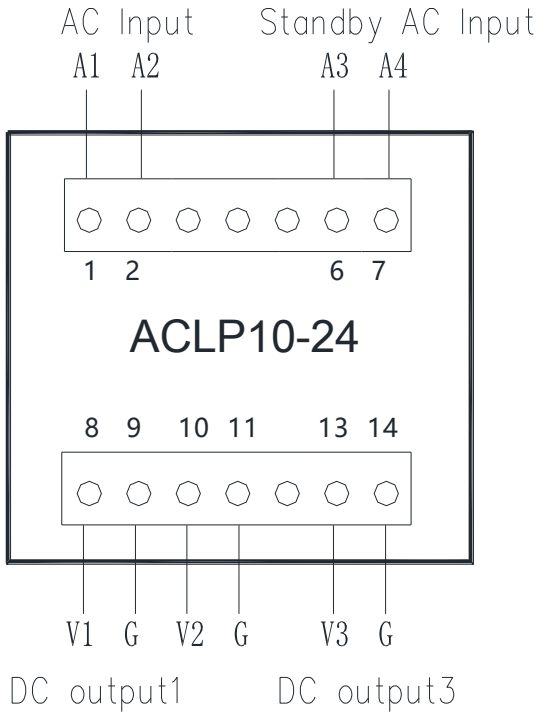

Terminals 1 and 2 (corresponding to A1 and A2) of aclp10-24 power supply module are input terminals of AC 220 V power supply, and A3 and A3 corresponding to terminals 6 and 7 are input expansion terminals. In the instrument, A3 is connected with A1 and A4 is connected with A2. 8. V1 and G corresponding to terminal 9, V2 and G corresponding to terminals 10 and 11, and V3 and G corresponding to terminals 13 and 14 are three groups of 24 V power output, which are used to provide DC power supply for external alarm and display instrument of aid series. Inside the instrument, all V terminals are connected and all G terminals are connected.

5.4 Typical wiring diagram

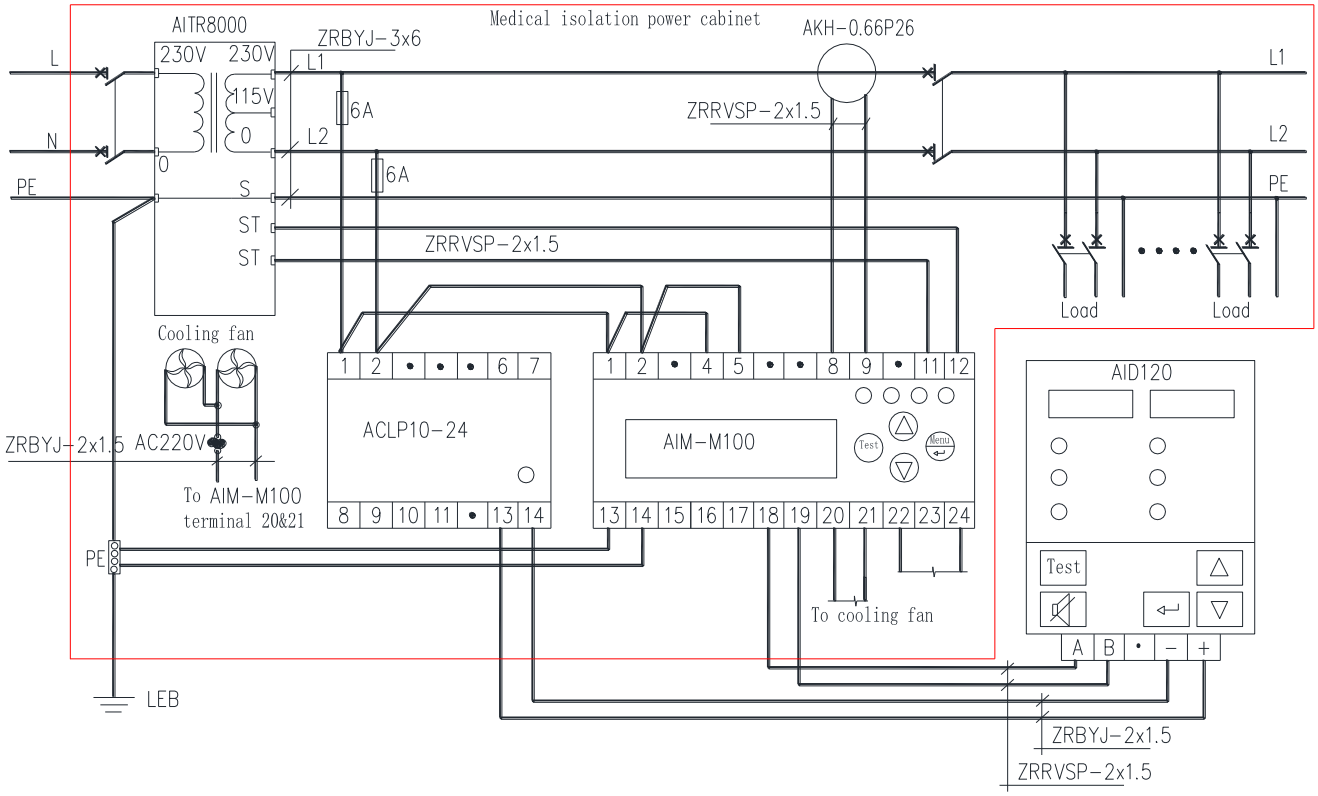

Note:

1) The connection line diameter of the input and output of the isolation transformer should match the rated current of the isolation transformer, or it can be selected according to the following table:

Isolation transformer type	Selected line diameter
AITR3150	3×4mm^2
AITR5000/AITR6300	3×6mm^2
AITR8000/AITR10000	3×10mm^2

2) Terminals 1, 2, 4 and 5 of AIM-M100 insulation monitor, and terminals 1 and 2 of ACLP10-24 power module need to be connected with AC220V of IT system, which can be directly connected to 0 and 230V output terminals at the secondary side of isolation transformer according to the diagram, and connected with 6A fuse protection in series.

3) The relay output control of the No.20 and 21 terminals of the AIM-M100 insulation monitor is a dry node, which needs an additional fan power supply when used for the fan control. When multiple transformers are centrally installed in one isolation power cabinet, multiple fans should be connected in a parallel mode controlled by multiple insulation monitors, that is, every one insulation monitor can start or stop all fans.

4) AKH-0.66P26 only needs to pass through one of the L1, L2 two wires of the isolation transformer secondary side output terminal, but can not pass through the two wires simultaneously. The output

is connected with the 2×1.5mm^2 wire to the No.8, 9 terminals of AIM-M100, which is not allowed for grounding.

5) In order to reliably monitor the grounding insulation of the isolation power system, the No.4, 5 terminals of AIM-M100 insulation monitor should be reliably connected to IT system (which can be connected in parallel to the output terminal of the isolation transformer) with 2×1.5mm^2 multicore copper wires, and the No.13, 14 terminals should be respectively connected to the on-site equipotential terminals (or the grounding terminals in the isolation power cabinet) with two independent 4mm^2 yellow-green grounding wires.

6) When AID150 centralized alarm and display instrument monitors multiple sets of AIM-M100 at the same time, the communication line should be connected by hand (that is, after the communication line of the previous meter is connected to the communication terminal of this meter, it is led out from the terminal of this meter and connected to the communication terminal of the following table). One matching resistance shall be connected between the two communication terminals at the head and end of RS485 bus, and the resistance recommended and attached with the goods. The resistance is 120Ω. The 15 and 16 terminals of AIM-M100 are also RS485 communication terminals, which are used to communicate with the upper computer. If there is no upper computer, there is no wiring.

5.5 Considerations

1) Medical IT system insulation monitoring and fault locating seven pieces of products should be centrally installed in the isolation power cabinet except for AID150. If the field space is too limited to apply the isolation power cabinet, the isolation transformer can be installed separately, but should not be too far away from the insulation monitor and the field load.

2) The installation of wiring should strictly follow the wiring diagrams, which should preferably use the pressure connection with the needle-type fittings, and then insert into the corresponding terminal of the instrument and tighten the screws to avoid the abnormal work conditions of instrument caused by loose connection.

3) The grounding wire of the instrument and the transformer shall be reliably connected with the equipotential terminals in the field. When applying the isolation power cabinet, it should be connected to the grounding terminals in the isolation power supply cabinet, and then to the equipotential terminals in the field.

4) The current input of AIM-M100 medical intelligent insulation monitoring instrument should use a matching AKH-0.66P26 type current transformer. It is recommended to use pressure connection with U-type indenters during wiring operation, and then connect to the CT terminal. Do not directly use the bare head connection, for the considerations of reliable connection and easy disassembly. Before removing the wiring, the CT primary circuits must be cut off or the secondary circuits must

be short connection.

5) Special reminder:

Any isolation transformer will have an impact current when it starts up, and too large impact current may cause the circuit breaker at primary side of the transformer difficult to disconnect or shut down. Therefore, for medical IT systems composed of medical isolation transformers and insulation monitoring products, in the selection of inlet circuit breaker of the isolation transformer, it is recommended to choose the circuit breakers only with short circuit protection but without overload protection according to GB requirements. If choosing the circuit breaker with overload protection, the circuit breaker should conform to the C and D tripping curves of GB14048.2-2008, and the rated current of the circuit breaker should be determined according to the capacity of the isolation transformer as follows: 10kVA-63A, 8kVA-50A, 6.3kVA-40A, 5kVA-40A, 3.15kVA-20A. If the circuit breaker selection is not in accordance with the above requirements, the company shall not be liable for any medical malpractice caused by the closure difficulty of the circuit breaker or the disconnection of the circuit breaker during operation.

6 Programming and application

6.1 Panel description

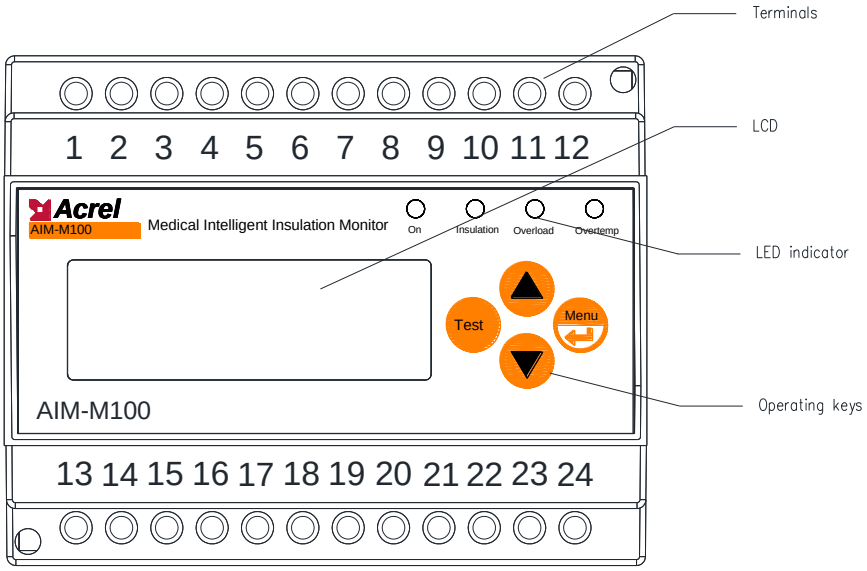

6.2 LED indicator instructions

6.2.1 AIM-M100

Indicator	Instructions
On	When the instrument operation is normal, the indicator light flashes, with the flashing frequency of about one time per second.
Insulation	When the insulation resistance exceeds the alarm value, or when the LL/FK

	is disconnected, the indicator light flashes to alarm.
Overload	When load current exceeds the total load current of transformer, the indicator light flashes to alarm.
Overtemp	When testing transformer temperature exceeds the alarm value, or when the temperature sensor wiring is disconnected, the indicator light flashes to alarm.

6.2.2 AID120

Indicator status	Instructions
On	When the device is in normal operation, the indicator flashes, and the flickering frequency is about once a second.
Insulation	When the insulation resistance exceeds the alarm value, the indicator light flashes to alarm.
Overload	When load current exceeds the total load current of transformer, the indicator light flashes to alarm.
Overtemp	When testing transformer temperature exceeds the alarm value, the indicator light flashes to alarm.

6.2.3 AID150

Indicator status	Instructions
On	When the device is in normal operation, the indicator flashes, and the flickering frequency is about once a second.
Comm	Indicate the status of device communication, when there is data communication, the indicator light flashes.
Fault	When AIM series monitor detect disconnection failure, indicator flashes alarm
Alarm	When AIM-M series monitor exceed threshold alarm, indicator flashing alarm

6.3 Button function descriptions

6.3.1 AIM-M100

AIM-M100 has four buttons in total, namely the “Setting and Enter” shared button, “▲” Up button, “▼” Down button, and “Self-test” button.

Buttons	Button function
Setting and Enter shared button	In non-programming mode, press this button to enter the programming mode; In programming mode, used as the Enter button.
▲ Up button, ▼Down button	In non-programming mode, used to view the fault records. In programming mode, used to increase or decrease the values, or to change the protection action status
Self-test button.	In operation state, used to start the self-test function of instrument.

6.3.2 AID120/150

The centralized alarm and display instrument has five buttons in total, namely the “Mute” button, “Menu & Enter” shared button, “▲” Up button, “▼” Down button, and “Test” button.

Key	Functions
Mute button	When there is alarm, press this button to eliminate the alarm sound.
▲ Up button, ▼Down button	In programming mode, used to increase or decrease the value.
Test button	In non-programming mode, used to start the self-test function of instrument.
Menu & Enter shared button	In non-programming mode, press this button to enter the programming mode; In programming mode, used as the Enter button.

6.4 Button operation descriptions

6.4.1 AIM-M100 insulation monitor in non-programming mode

1) Enter operation mode. The default mode of startup is operation mode. The main interface displays temperature value, insulation resistance value, load rate and current system time.

2)View the alarm record. In the main interface, press the "UP" or "DOWN" to enter the "fault record query" interface. Press the "enter" button to confirm, and then you can turn the page through the "down key" or "up key" to query the condition of each fault record in turn. The first record is the latest record and the tenth record is the oldest record.

3) Instrument self check. Press the "Test" key, the monitor will start the self-test program to simulate overload fault, insulation fault and over temperature fault. In order to detect and judge whether the main fault is normal or not. If the monitor can detect the above three kinds of faults, it indicates that the instrument function is normal.

6.4.2 AIM-M100 insulation monitor in programming mode

（1）Enter programming mode

In normal operation, press "ENTER" to enter the password input page. Press the "ENTER" key again to make the password digit reverse white display. Set the size of the anti white number through the "UP" key, select the anti white digit through the "DOWN" key. After inputting the correct password, press "ENTER" to clear the anti white bit, and press the "ENTER" key again to enter the programming mode.

（2）Exit programming mode

In the programming mode, select the option [1. Exit] through the up and down keys, and press the "enter" key to exit the programming mode and enter the operation mode.

(3) Password settings

Select the option [2. Password set], press enter and reset the system password through the up and down keys. Select exit, press enter to save and exit. Examples of operation are as follows:

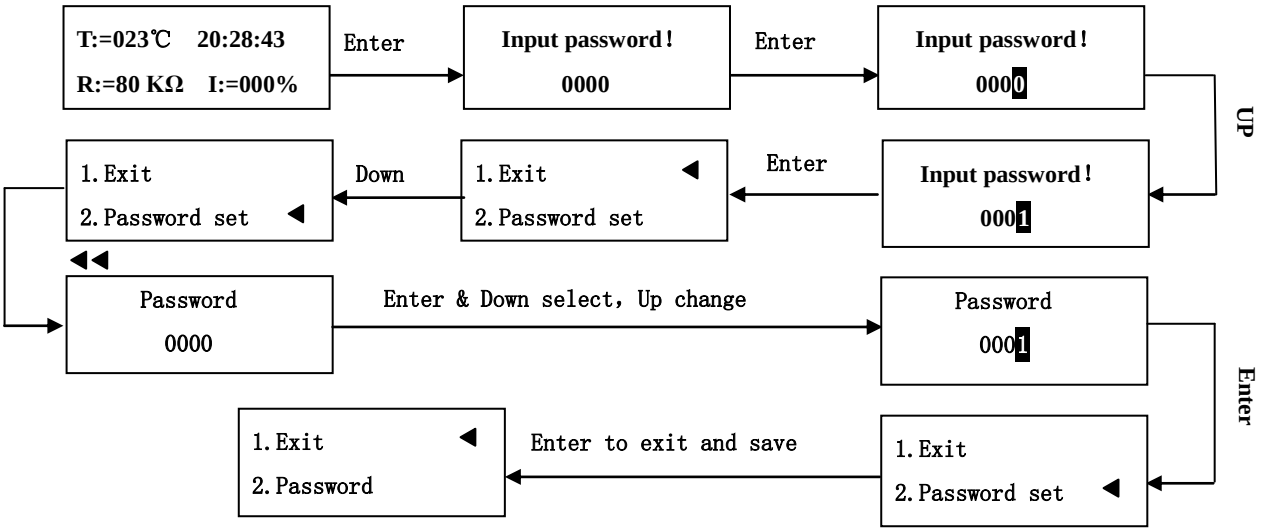

(4) Main interface settings

The main interface setting is to select different display styles. There are three display styles for users to choose. The operation mode is similar to "Password set".

(5) Security setting

Security setting is to set the parameters of system insulation alarm value, overload current alarm value and transformer overtemperature alarm value, which is the same as that of "password set". The following is only the insulation warning value, current warning value and temperature warning value settings for programming examples.

Set the insulation alarm value to 50KΩ, and the operation steps are as ollows:

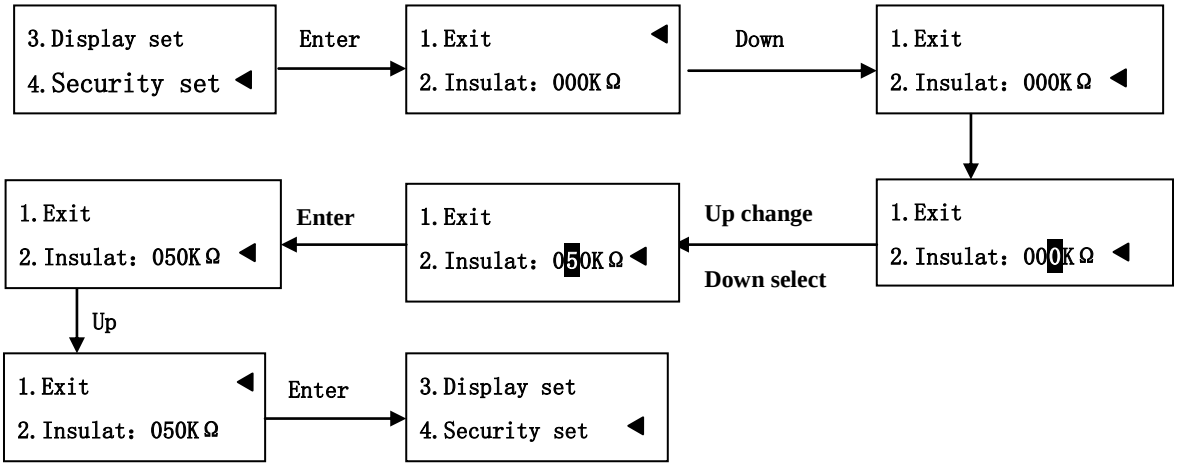

Set the current alarm value to 14A, and the operation steps are as follows:

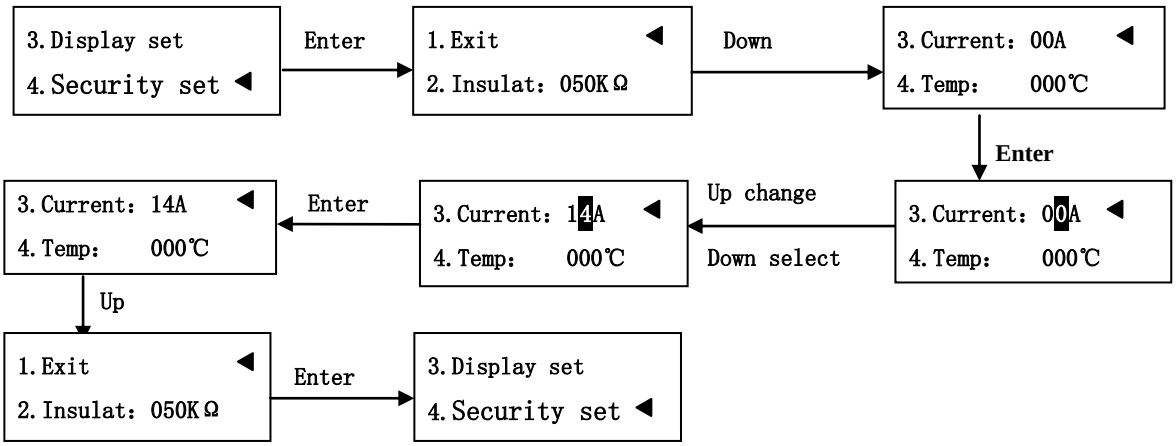

Set the temperature alarm value to 70 ℃, and the operation steps are as follows:

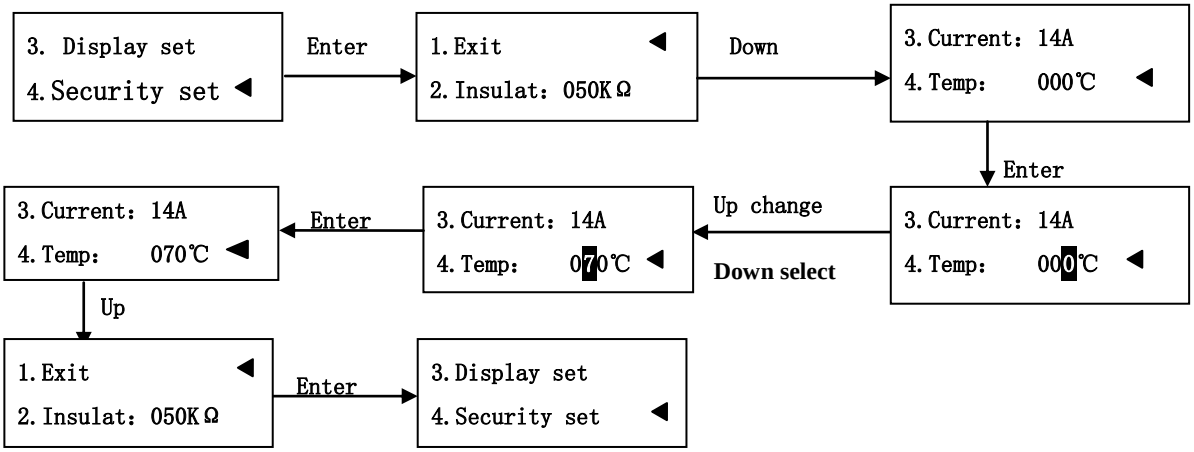

(6) Communication baud rate setting

Set the primary address to 001 and the primary baud to 19200bps. The programming example is as follows:

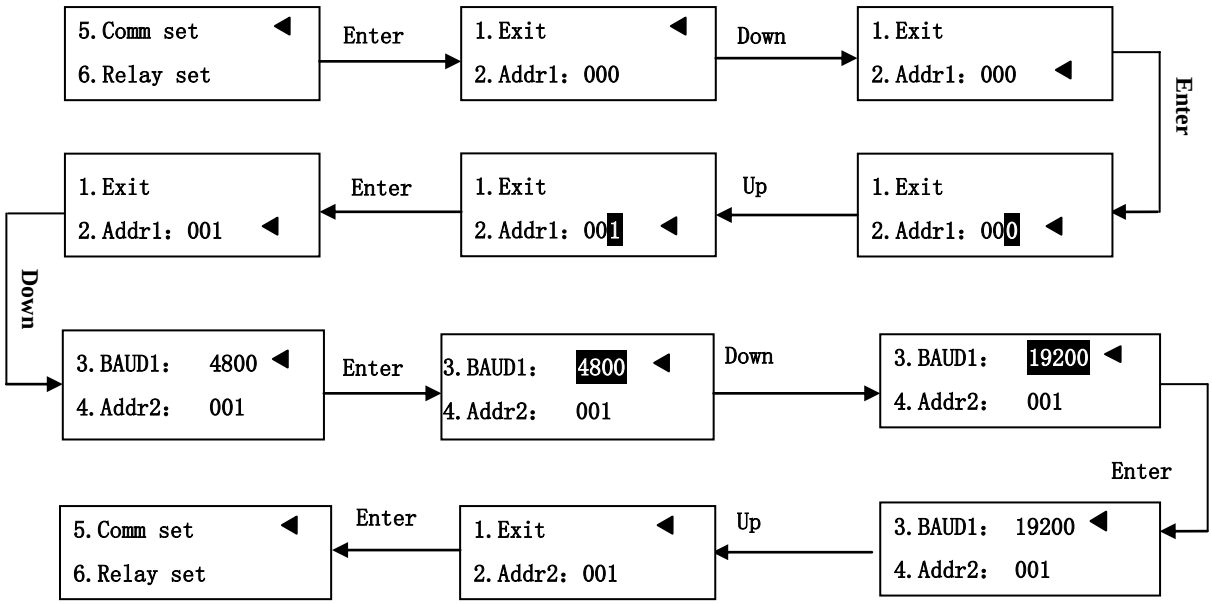

Note: when AIM-M100 communicates with AID120, the slave address of AIM-M 100 must be set to 1, and the slave baud must be set to 9600.

（7）Relay mode setting

Set the normally open contact of the J1 and the J2 contacts 22 and 24 open, and close between 23 and 24. Examples are as follows:

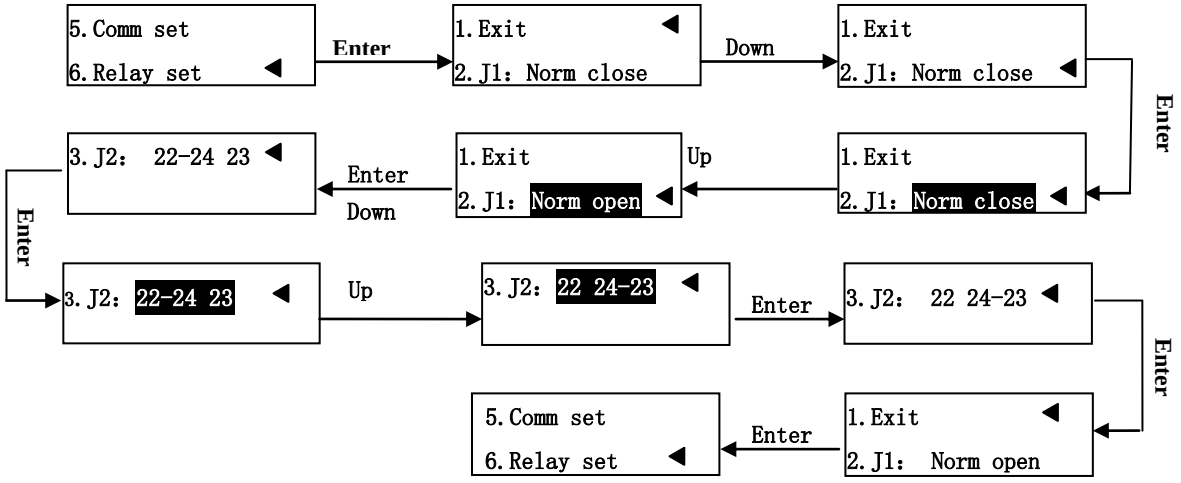

(8) Time setting

Time settings is to set the date and current time of the instrument. Time setting and main interface settings and password settings are similar.

(9) Restore factory setting

"Factory setting" can restore the instrument parameters to the factory settings.

(10) Version information

"Version info." displays information about the instrument model and software version.

6.4.3 AID120 external alarm and display key operation

(1) AID120 has 5 seconds to read the host data by default when the AID120 is started. At this time, the insulation resistance value and transformer load rate display the initial value of 0. If the host data is not read for five consecutive times, the insulation resistance shows err, the transformer load rate shows err, at the same time, the sound alarm is started and all LED flickers.

(2) If the host data is read normally, the insulation resistance will display the real-time value, and the transformer load rate will display the current system load condition.

(3) When the system is in normal operation, pressing the self-test key will start the AIM-M100 insulation monitor self-test, and display the self-test results and alarm status. After the self-test, AID120 will return to the normal operation state.

6.4.4 AID120 Programming menu

Display	Value range	Description
	None	Exit
	Fixed to 1	Address
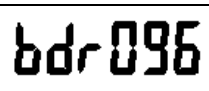	Fixed to 096	Baud is 9600
	0～999	Insulation resistance alarm value setting
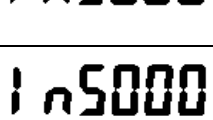	14、18、22、28、35、45	Current alarm value setting
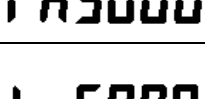	0～200	Transformer temperature alarm value setting
	无	Software version number

6.4.5 AID120 programming example

(1) Insulation resistance value setting

Taking 50KΩ alarm value setting as an example, the setting steps are as follows:

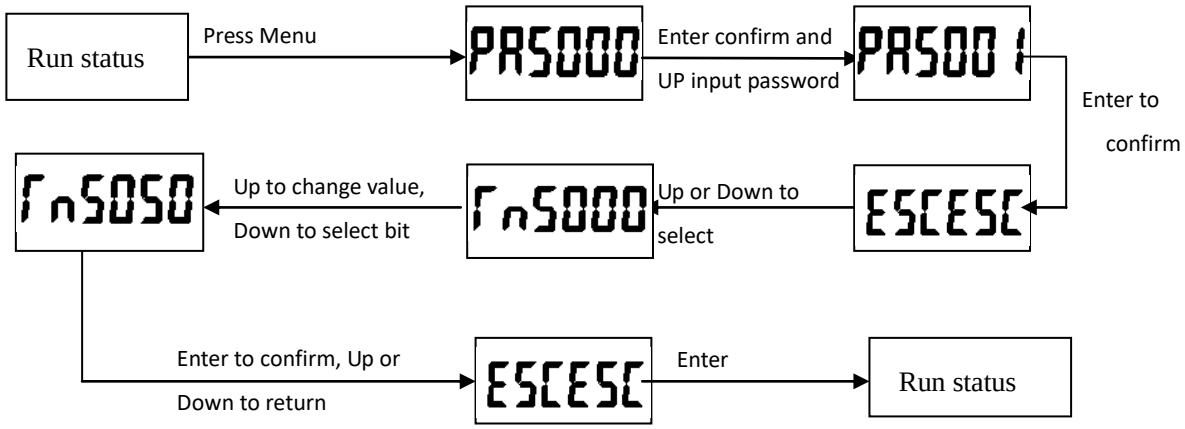

(2)Current alarm value setting

Taking the current alarm value 45A as an example, the setting is as follows::

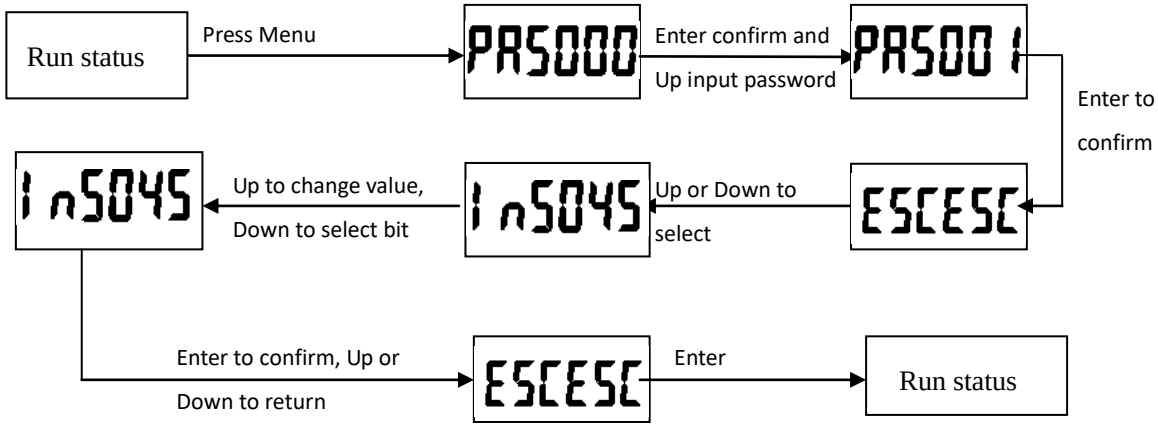

(3)Setting of transformer temperature alarm value

Taking 120℃ as an example, the setting steps are as follows:

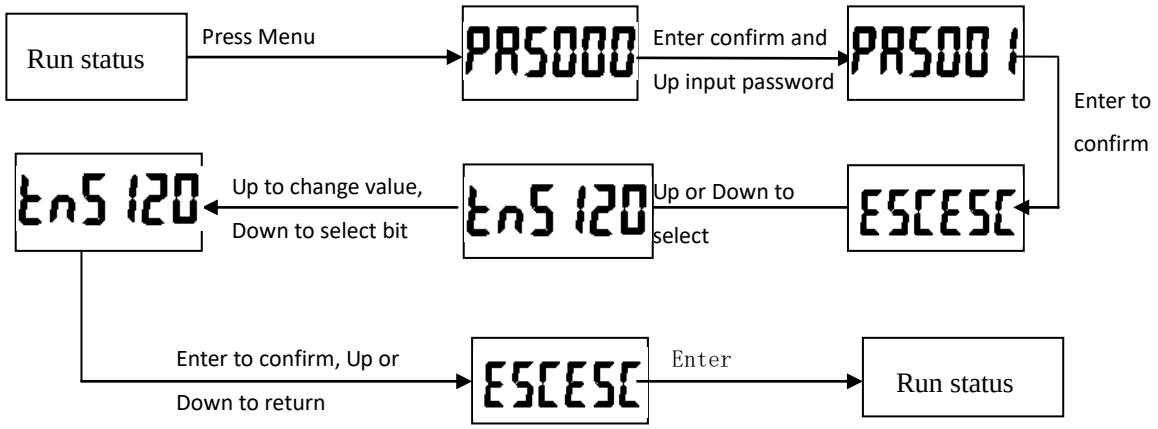

6.4.6 AID150

1) Description of the Operating Interface

After the system is powered on, if there is no fault alarm, AID150 shows the normal operation interface as shown in the following figure. The black boxes in the figure indicate that the corresponding address serial number is connected to the instrument communication, and the black boxes indicate that there is no instrument connection, or that the communication is not connected.

When the insulation monitor or residual current monitor detects the fault, AID150 displays the corresponding alarm interface and sends out the corresponding sound and light alarm.

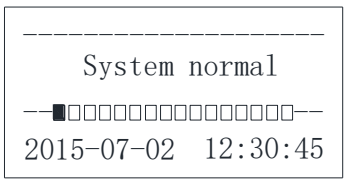

Normal system

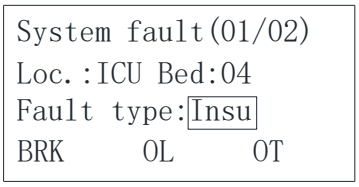

fault indication（AIM-M100）

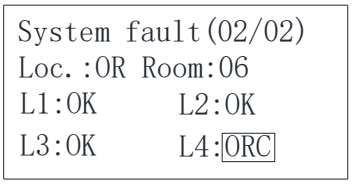

fault indication（AIM-R100）

2）Fault record viewing interface operations and descriptions

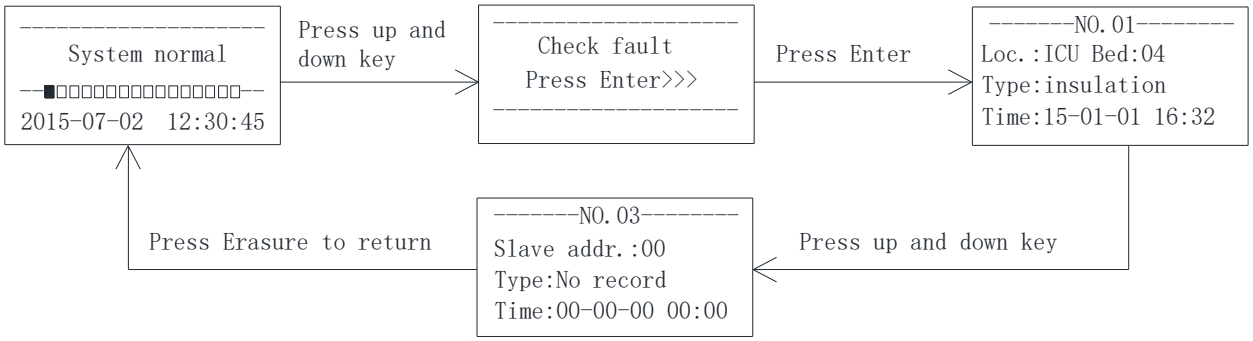

3) Programming Interface Operation and Explanation

The operation method and process are shown in the following flow chart.

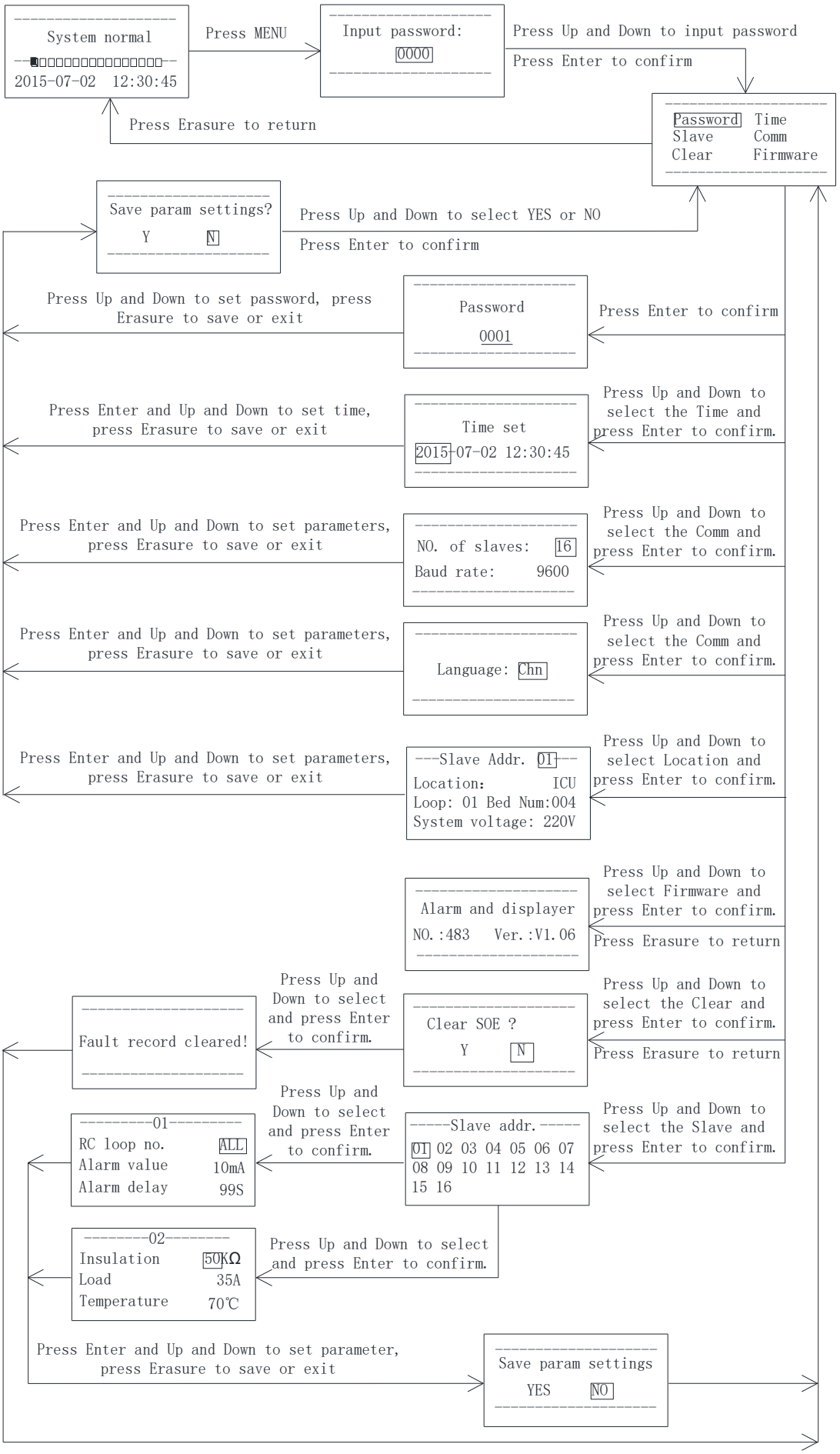
System normal
2015-07-02 12:30:45
Press MENU
Input password:
0000
Press Up and Down to input password
Press Enter to confirm
Password Time
Slave Comm
Clear Firmware
Press Erasure to return
Save param settings?
Y N
Press Up and Down to select YES or NO
Press Enter to confirm
Password
0001
Press Enter to confirm
Press Up and Down to set password, press Erasure to save or exit
Time set
2015-07-02 12:30:45
Press Up and Down to select the Time and press Enter to confirm.
Press Enter and Up and Down to set time, press Erasure to save or exit
NO. of slaves: 16
Baud rate: 9600
Press Up and Down to select the Comm and press Enter to confirm.
Press Enter and Up and Down to set parameters, press Erasure to save or exit
Language: Chn
Press Up and Down to select the Comm and press Enter to confirm.
Press Enter and Up and Down to set parameters, press Erasure to save or exit
---Slave Addr. 01---
Location: ICU
Loop: 01 Bed Num:004
System voltage: 220V
Press Up and Down to select Location and press Enter to confirm.
Press Enter and Up and Down to set parameters, press Erasure to save or exit
Alarm and displayer
NO.:483 Ver.:V1.06
Press Up and Down to select Firmware and press Enter to confirm.
Press Erasure to return
Clear SOE ?
Y N
Press Up and Down to select the Clear and press Enter to confirm.
Press Erasure to return
Fault record cleared!
Press Up and Down to select and press Enter to confirm.
-----Slave addr.-----
01 02 03 04 05 06 07
08 09 10 11 12 13 14
15 16
Press Up and Down to select the Slave and press Enter to confirm.
--------01--------
RC loop no. ALL
Alarm value 10mA
Alarm delay 99S
Press Up and Down to select and press Enter to confirm.
--------02--------
Insulation 50KΩ
Load 35A
Temperature 70℃
Press Up and Down to select and press Enter to confirm.
Press Enter and Up and Down to set parameter, press Erasure to save or exit
Save param settings
YES NO

Note:

when aid150 is in use, the total number of Insulation Monitors and residual current monitors connected to RS485 bus should be set first, and the total number should not exceed 16 sets. This parameter is in [communication settings] in the menu. The slave address of each insulation monitor and residual current monitor shall be numbered from 1 to 16 as far as possible. When the total number of Insulation Monitors and residual current monitors exceeds 16 sets, the number of aid150 shall be increased and networking shall be conducted separately.

7 Communication protocol

7.1 Modbus-RTU communication protocol

In five pieces of products, the communication between the AIM-M100 insulation monitor and the upper computer uses the Modbus-RTU communication protocol. The Modbus protocol particularly defines the check code, the data sequences and so on, which are the necessary contents of the specific data exchange. The Modbus protocol uses a master-slave responsive connection (half-duplex) on a communication line, which means the signal on a single communication line is transmitted in two opposite directions. Firstly, the signal from the main computer is addressed to a unique terminal device (slave computer), and then the answering signal emitted from the terminal device is transmitted to the host in the opposite direction.

The Modbus protocol only permits communication between hosts (PC, PLC, etc.) and terminal devices, without allowing the data interchange between independent terminal devices. So that terminal devices do not occupy communication lines when they are initialized and are limited to in response to the query signals arriving at the computer.

7.2 Introduction to the function code

7.2.1 Function code 03H or 04H: Read the registers

This function allows the user to acquire the data collected and recorded by equipment and the system parameters. The number of data requested by hosts has no limit, but cannot exceed the defined address range.

The following example shows how to read a measured insulation resistance value from No.01 slave computer, with the address of the insulation resistance value of 0008H.

The host computer sends		Send message
Address code		01H
Function code		03H
Start address	High byte	00H

The slave computer returns	Return message
Address code	01H
Function code	03H
Bytes	02H

	Low byte	08H
Number of registers	High byte	00H
	Low byte	01H
CRC check code	High byte	74H
	Low byte	0CH

Register data	High byte	00H
	Low byte	50H
CRC check code	High byte	21H
	Low byte	75H

7.2.2 Function code 10H: Write the registers

The function code 10H allows the user to change the contents of multiple registers, which can write the time and date in this meter. The host can write up to 16 (32 bytes) data at a time.

The following example shows a preset address of 01 with an installation date and time of 12:00, Friday, December 1st, 2009, in which the Monday to Sunday are replaced with number 1 to 7.

The host computer sends		Send message
Address code		01H
Function code		10H
Start address	High byte	00H
	Low byte	04H
Number of registers	High byte	00H
	Low byte	03H
Bytes		06H
0004H Data to be written	High byte	09H
	Low byte	0CH
0005H Data to be	High byte	01H

The slave computer returns		Return message
Address code		01H
Function code		10H
Start address	High byte	00H
	Low byte	04H
Number of registers	High byte	00H
	Low byte	03H
CRC check code	High byte	31H
	Low byte	C9H

written	Low byte	05H
0006H Data to be written	High byte	0CH
	Low byte	00H
CRC check code	High byte	53H
	Low byte	3FH

7.3 AIM-M10 parameter address table

No.	Address	Parameter	Read-write property	Value range	Word
1	0000H	Protecting passwords	R/W	0001-9999 (Default value is 0001)	1
2	0001H high byte	RS485 address1	R/W	1~247 (Default value is 1)	1
	0001H low byte	RS485 Baud1	R/W	1~3：4800、9600、19200bps(Default value is 2)	
3	0001H high byte	RS485 address2	R/W	1~247 (Default value is 1)	1
	0001H low byte	RS485 Baud2	R/W	1~3：4800、9600、19200bps(Default value is 2)	
4	0003H high byte	reserve			1
	0003H low byte	Relay wiring and output status	R/W	Bit3: 0:22 24-23, 1:22-24 23 Bit2: 0:J1 norm open, 1:J1norm close Bit1: 0:J2 is open, 1:J2 is close Bit0: 0:J1 is open, 1:J1 is close	
5	0004H high byte	Year	R/W	1-99	1
	0004H low byte	Month	R/W	1-12	
6	0005H high byte	Day	R/W	1-31	1
	0005H low byte	Week	R/W	1-7	
7	0006H high byte	Hour	R/W	0-23	1
	0006H low byte	Minute	R/W	0-59	

8	0007H high byte	Second	R/W	0-59	1
	0007H low byte	Reserve	R		
9	0008H	Insulation resistance	R/W	10-999（Unit is KΩ）	1
10	0009H	Load current	R/W	0-500（Unit is 0.1A）	1
11	000AH	Transformer temperature	R/W	-50~200(Unit is℃)	1
12	000BH high byte	Reserve			1
	000BH low byte	Fault type	R	Bit0:1 Insulation resistance fault Bit1:1 Overload fault Bit2:1 Transformer overheat fault Bit3:1 L1 or L2 disconnection fault Bit4:1 PE or KE disconnection fault Bit5:1 Temperature sensor disconnection fault Bit6:1 Current transformer disconnection fault (preset) Bit7:1 Device fault	
13-16	000CH-000FH	Reserve			4
17	0010H	Insulation resistance set value	R/W	10~999（Unit：KΩ）(default：50)	1
18	0011H	Load current set value	R/W	14、18、22、28、35、45 (Unit：A)(default：35)	1
19	0012H	Transformer temperature set value	R/W	0~200 (Unit：℃)　　(default：70)	1
20-24	0013H-0017H	Reserve			5
25	0018H high byte	Event　Reserve			1

	0018Hlow byte	record 1	STA1	R	SOE1 type：0~6 0： No fault record 1: Insulation fault 2: Overload fault 3: Over temperature fault 4: Ll disconnection 5: PK disconnection 6: TC disconnection	
26	0019Hhigh byte		Year1	R	SOE1 time - year	1
	0019Hlow byte		Moth1	R	SOE1 time - month	
27	001AHhigh byte		Day1	R	SOE1 time - day	1
	001AHlow byte		Hour1	R	SOE1 time - hour	
28	001BHhigh byte		Minute1	R	SOE1 time - minute	1
	001BHlow byte		Second1	R	SOE1 time - second	
29-64	001CH-003FH	Store the other 9 event records in the same format as the first one				

8 Typical applications

8.1 Application of five-piece set of medical IT system insulation monitoring products in operating room

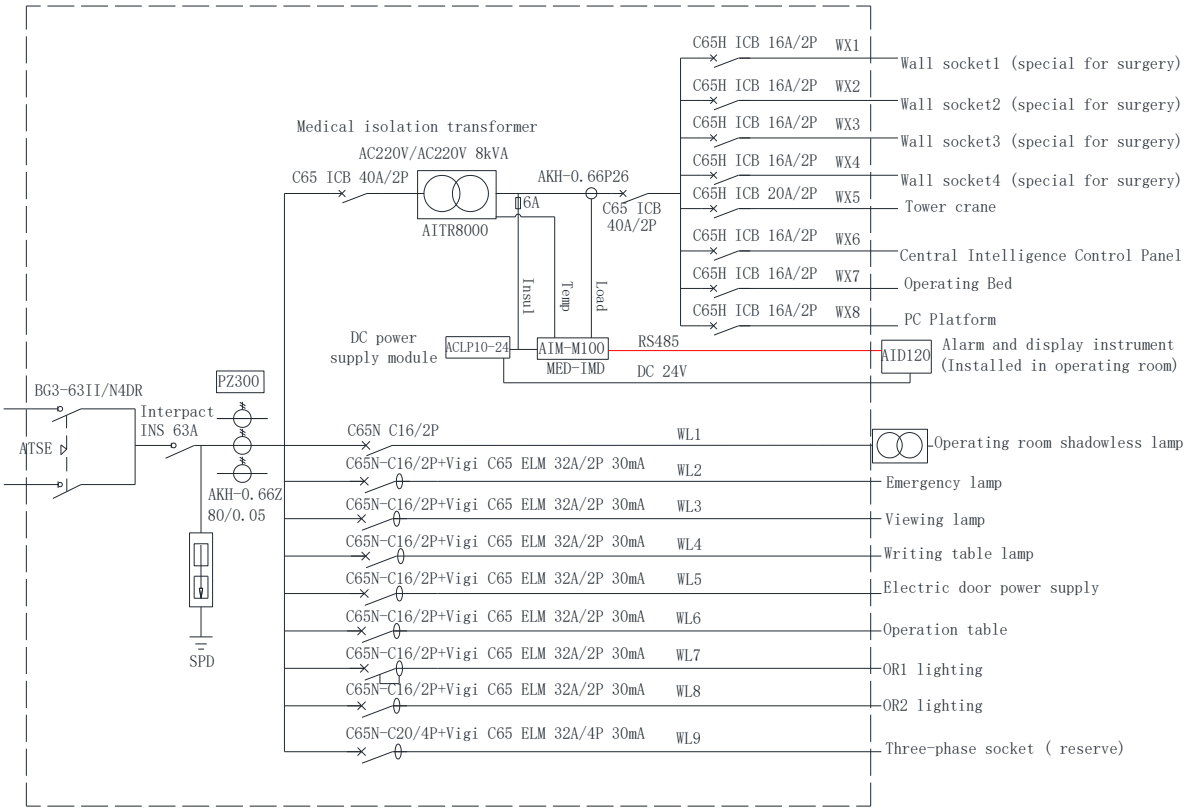

Note: The grounding bat in the isolated power supply cabinet should be connected reliably with the equipotential terminals in the field.

9 Power on and debugging instructions

9.1 Wiring check

For each set of IT system, the wiring check should be conducted before power on, mainly checking whether there is wrong, missed or short connection. The examination can be conducted sequentially in the following order according to the wiring diagrams shown in section 5.4 of this manual:

1) Check whether each five-piece set constitutes an independent IT distribution system, and ensure that the current, resistance and temperature signals monitored by each insulation monitor are connected to the same isolation transformer and its IT system.

2) Check whether the No.1 and No.2 input terminals of ACLP10-24 power supply module in each IT system are connected to the 0 and 230V terminals on the secondary side of the isolation transformer. Whether the V and g of the 24 V output end are reliably connected with the 24 V and G terminals of the aid series external display device, and the positive and negative poles are correct.

3) Check whether the No.8(I0) and 9(I1) terminals of AIM-M100 in each system are reliably connected to the terminals of the transformer AKH-0.66P26 socketed to the secondary side of the corresponding isolation transformer, and are not grounded. The transformer only passes one of the two lines of the output terminals of the isolation transformer.

4) Check whether 11 (T0) and 12 (T1) terminals of AIM-M100 in each system are connected with the two ST terminals of isolation transformer and connected reliably.

5) Check whether the terminals 4 (L1) and 5 (L2) of AIM-M100 in each set of systems are reliably connected with the two wires of IT system (i.e. output end of secondary side of isolation transformer).

6) Check whether the 13 (FE) and 14 (KE) terminals of AIM-M100 in each system are connected to the field equipotential terminal block with wires, and whether the S terminal of the isolation transformer is also reliably connected with the equipotential terminal block.

7) Check whether terminals 18 (A2) and 19 (B2) of RS485 communication of AIM-M100 instrument in each system are connected with terminals a and B of AID series external alarm display instrument

in a hand-in-hand manner, and the positive and negative are correct.

8) If each isolation transformer has a cooling fan, check whether the power control of the cooling fan is connected to the 20 and 21 terminals of AIM-M100 in the system.

9.2 Common faults and eliminations

Make sure the wirings are correct and power on the system. Then check whether each meter is abnormal, and whether there is a fault alarm in AIM-M100. For common problems, the causes can be determined and the faults can be eliminated according to the phenomenon of each instrument and the fault types:

Equipment name	Fault phenomenon	Possible causes and troubleshooting
AIM-M100 insulation monitor	LCD display: LL disconnection fault, and the insulation indicator is lit.	No.4 and 5 terminals of AIM-M100 are not reliably connected to the two lines of the output terminal of the isolation transformer. Check the wirings and make sure they are reliably connected.
	LCD display: FK disconnection fault, and the insulation indicator is lit.	No.13 and 14 terminals of AIM-M100 are not reliably connected to the equipotential terminals. Check the wirings and make sure they are reliably connected.
	LCD display: TC disconnection fault, and the overheat indicator is lit.	No.11 and 12 terminals of AIM-M100 are not reliably connected to the two ST terminals of the isolation transformer. Check the wirings and make sure they are reliably connected.
	LCD display: insulation fault, and the insulation indicator is lit.	At least one of the two lines in the IT system at the secondary side of the isolation transformer has a grounding fault, after elimination it can be restored to normal.
	The instrument is not lit.	The 220V power supply of AIM-M100 is not connected well. Check the wirings of No.1 and 2 terminals and make sure they are reliably connected.
ACLP10-24 power module	Power on indicator is not lit.	Check whether the wirings of 220V power input are normal and whether the voltage between the two terminals is within the allowable input range.
AID series centralized alarm and	The instrument is not lit.	The 24V power supply is not connected well. Check the wirings of 24V and G terminals and rewire.
	Communication	1) If the slave address of AIM-M100 is not set to the

display instrument	indicator does not flash	default 1, or the slave buad is not set to the default 9600, it needs to be set as the default value. 2) If the communication line with AIM-M100 in the system is not well connected, check the communication line and confirm whether the matching resistance is connected properly.

Note: If the above faults occur, interrupt the power to troubleshoot, and adjust the wirings until everything is normal.

9.3 Settings and debugging

1) When entering the menu settings, ACREL medical IT products need to enter the password. The initial password of all medical IT products is 0001.

2) After the system is powered on, set the AIM-M100 load current alarm value according to the capacity of the isolation transformer. The corresponding relations between alarm current and isolation transformer capacity are: 45A---10kVA, 35A---8kVA, 28A---6.3kVA, 14A---3.15kVA. After you set up, follow the process step by step to exit and save the setting parameters. The default alarm current value of the instrument is 35A, if the matching transformer is 8kVA, then this parameter does not need to be set. 1)。

3) Communication address setting. In order to realize the centralized monitoring function of multiple sets of insulation monitors through the centralized alarm and display AID150, it is necessary to set the slave addresses of each AIM-M100 in turn (the master address is used to communicate with the upper computer, if there is no upper computer, it is not necessary to set it), and then the communication between the instruments should be connected hand in hand. After setting, the head and end of the communication bus are connected with a matching resistor of 120Ω (the resistance must be added, otherwise communication may not be possible). AID150 does not need to set RS485 communication address. When using AID120 type external alarm and display instrument to monitor a set of aim-m100 insulation monitor, the slave address of the insulation monitor should be 1, and the slave baud rate should be 9600, otherwise it can not communicate.

4) When AID150 is used, the total number of insulation monitors or residual current monitors connected to RS485 bus should be set first, and the total number should not exceed 16 sets. In AID150, the setting of this parameter is in the [Comm set] submenu of the menu. The slave address of each insulation monitor or residual current monitor shall be numbered from 1 to 16 as far as possible. When the total number exceeds 16 sets, the number of aid150 shall be increased and networking shall be conducted separately.

Headquarters: Acrel Co., LTD.

Address: No.253 Yulv Road Jiading District, Shanghai, China

TEL.: 0086-21-69158338 0086-21-69156052 0086-21-59156392 0086-21-69156971

Fax: 0086-21-69158303

Web-site：www.acrel-electric.com

E-Mail: ACREL008@vip.163.com

Postcode: 201801

Manufacturer: Jiangsu Acrel Electric Appliance Manufacturing Co., LTD.

Address: No.5 Dongmeng Road, Dongmeng Industrial Park, Nanzha Street, Jiangyin City, Jiangsu Province, China

TEL/Fax: 0086-510-86179970

Web-site：www.jsacrel.com

E-Mail: JY-ACREL001@vip.163.com

Postcode: 214405