PRIMUS IT

Company Profile



Global One-stop Optical Transceivers Solutions Provider

www.primus-it.com

© 2020 All rights reserved. PRIMUS IT Limited

PRIMUSIT

About us

Products

Advantages

Vision

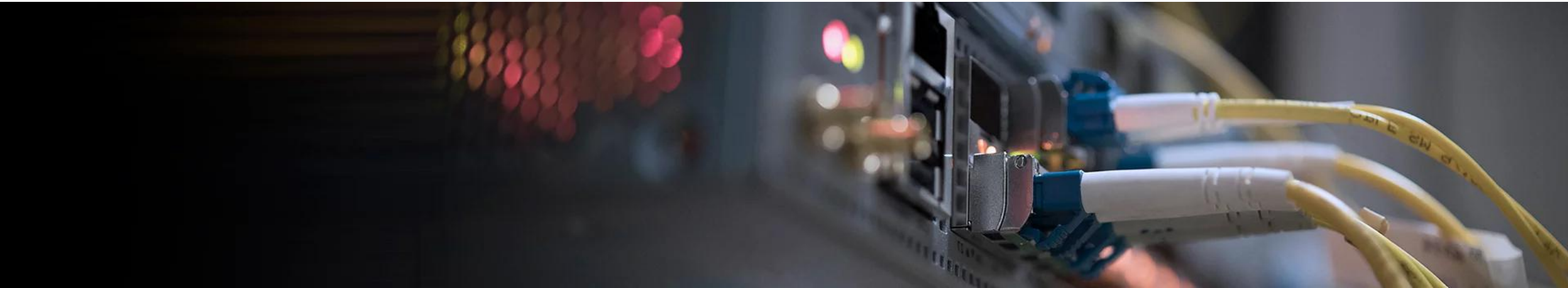



About Us

PRIMUSIT

- Company overview
- Company history
- Organizational structure
- Market performance
- Honor & Certification

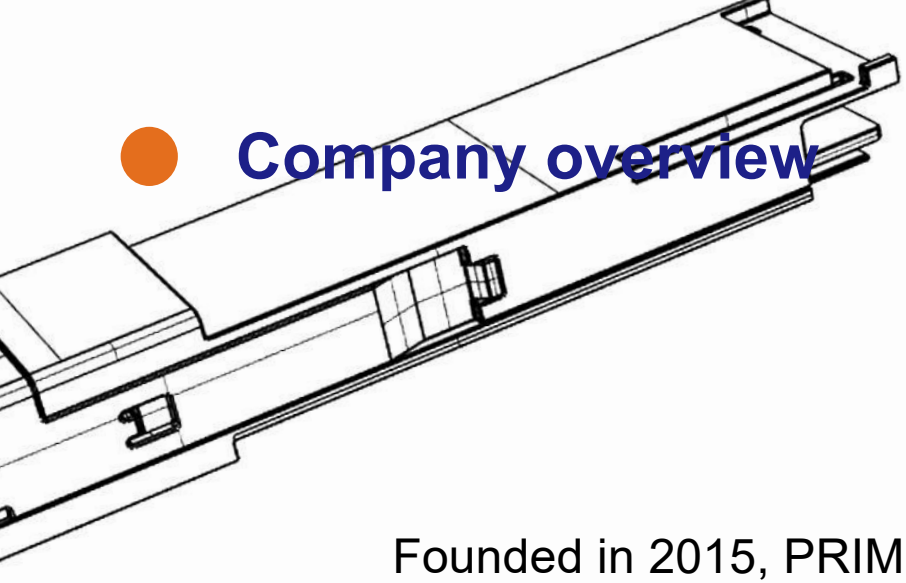

Company overview

Founded in 2015, PRIMUS IT Limited specializes in providing cost-effective end-to-end fiber optic connectivity solutions and 100% MSA-compliant products to customers in the global communications industry.

From traditional 100M to the latest **5G fronthual** optical transceivers,we focus on developing miniaturization, high performance, Low power consumption, cost effective optical transceivers.

Well support for **data communication, data center, long-distance transmission, 4G/5G wireless network** applications .

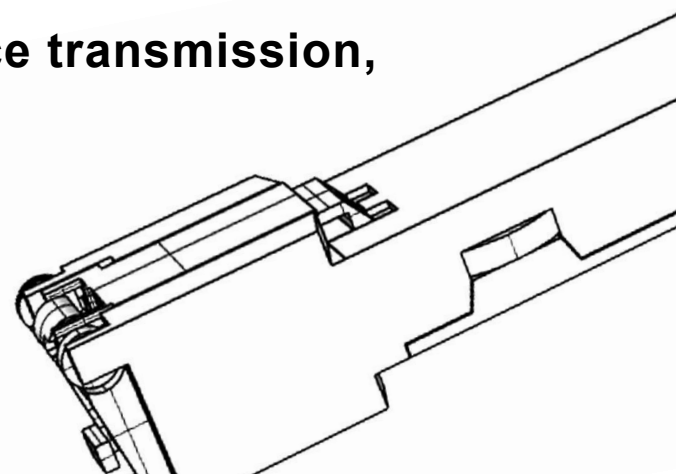

Company history

2003-2006

Agent in China
AOI, Emcore, Lumics， etc

2006-2010

155M-2.5Gbps
1X9/SFF/SFP



2010-2014

X2/XENPAK
XFP/SFP+
CISCO Agent



2015

Oversea B2B
Brand

PRIMUSIT

2015-2017

25G SFP28 40G QSFP+
10G-40G QSFP/AOC/DAC
100G CFP2/CFP4/QSFP28
100G QSFP28 AOC/DAC



2017

Oversea B2C
Brand

INVAXON®

2018

Invest
in factory



5G 2019

25G SFP28 BIDI
25G SFP28 CWDM
25G SFP28 DWDM
50G QSFP28 LR
50G QSFP28 ER
400G QSFP DD

2020...

CTST
Strategic
partner
.....

Organizational structure

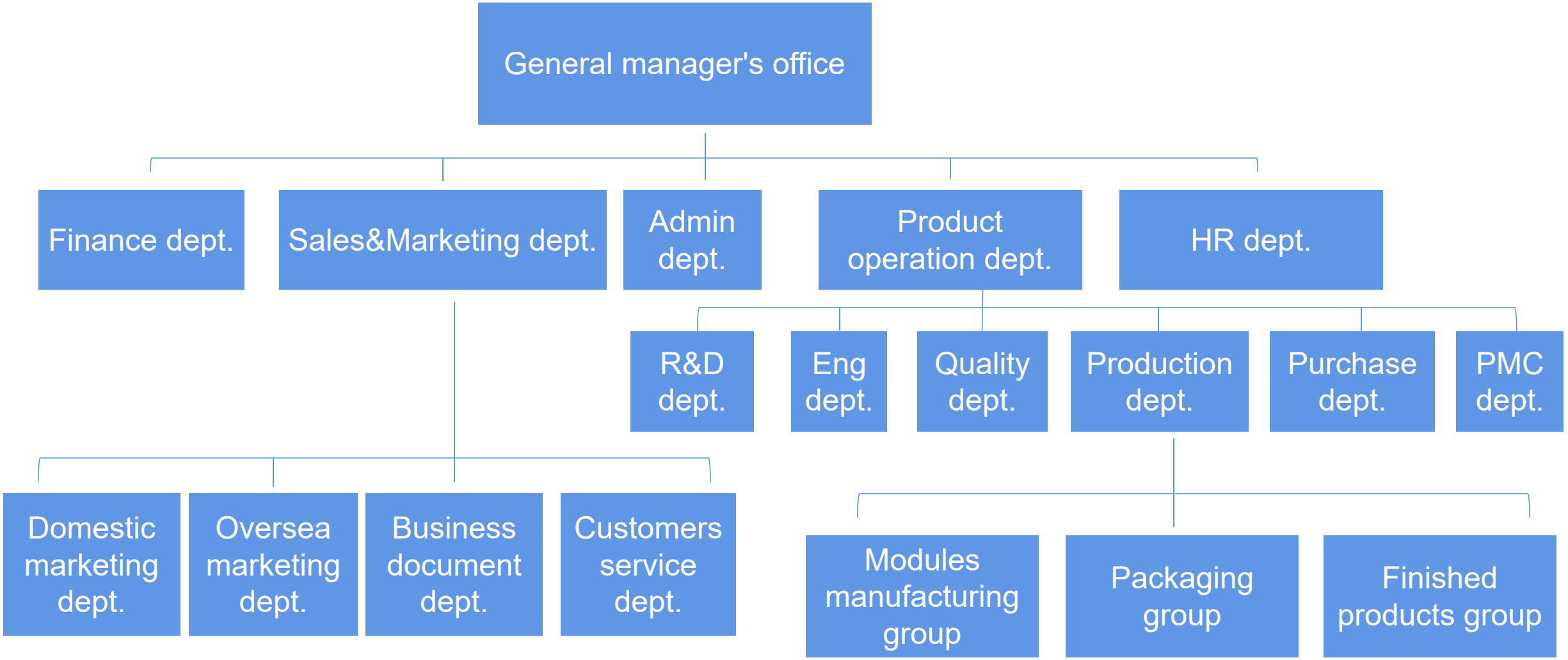

Market performance

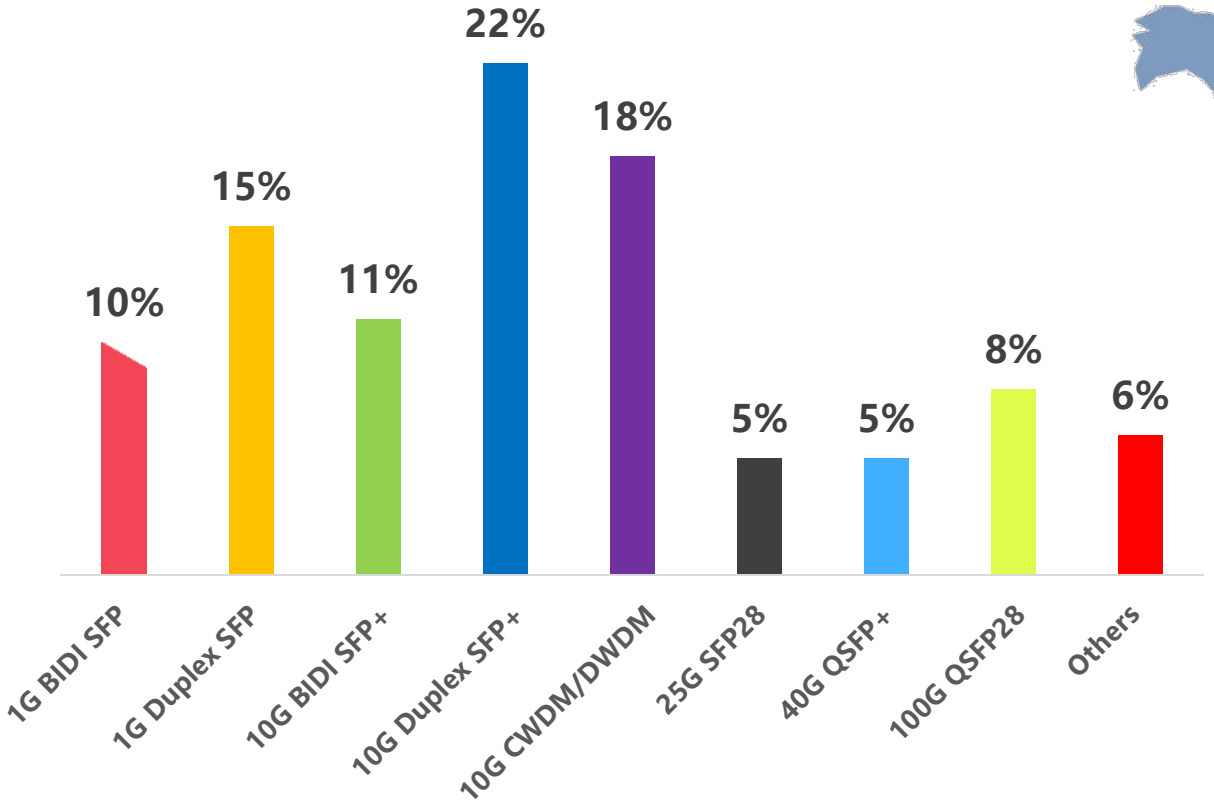

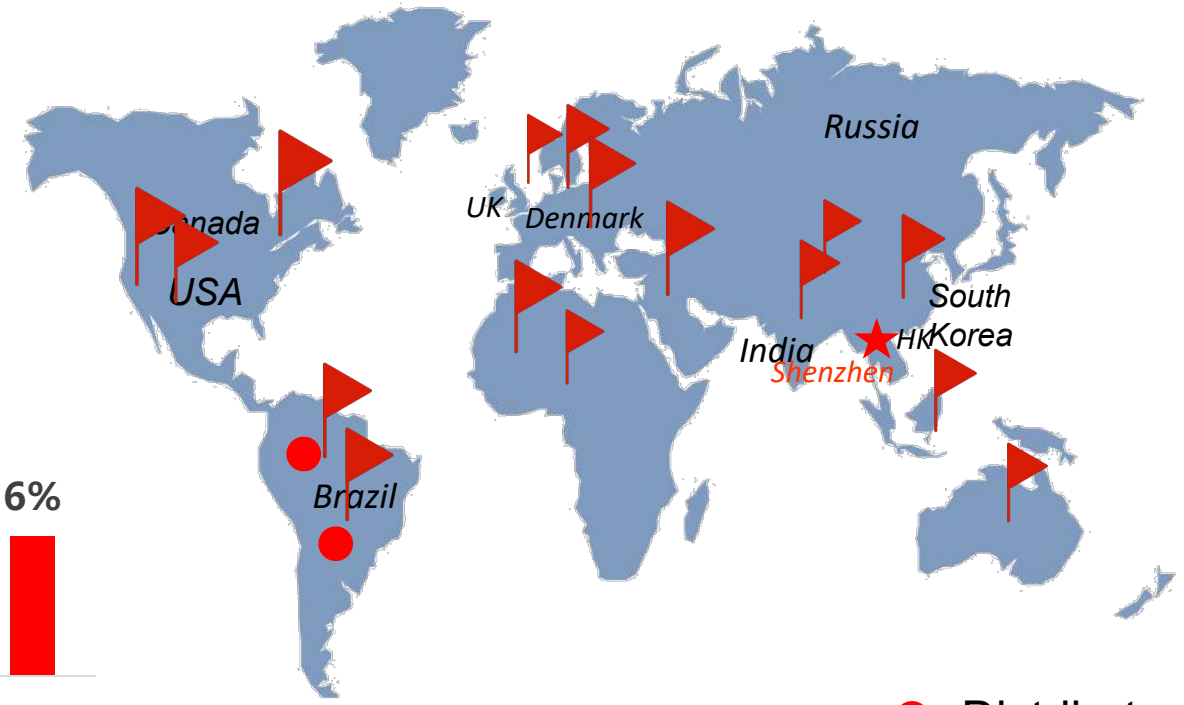

- Distributors

- 2019 Annual turnover

  Total 180M RMB, Domestic 140M RMB,Oversea 40M RMB

- Asia 13.8%
- Middle East 34.4%
- North America 15.5%
- Europe 31%
- South America 5.3%

Honor & Certification



CE



FCC



REACH



RoHS





ISO 9001



TUV

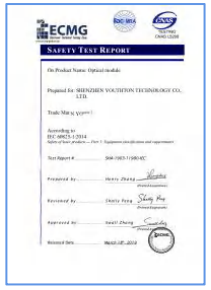

IEC 60825

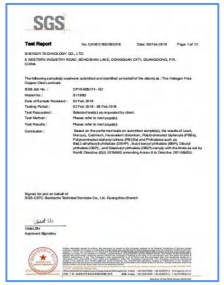

SGS





Products

PRIMUSIT

- Datacom products
- Telecom products
- Compatible brands

Datacom products



Data center

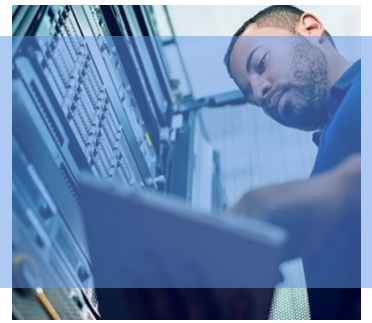

IP network

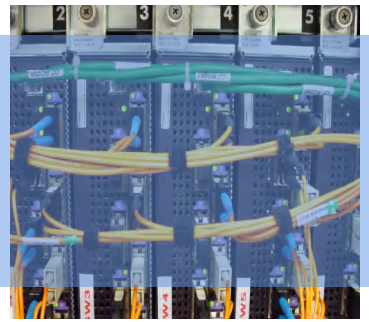

SAN

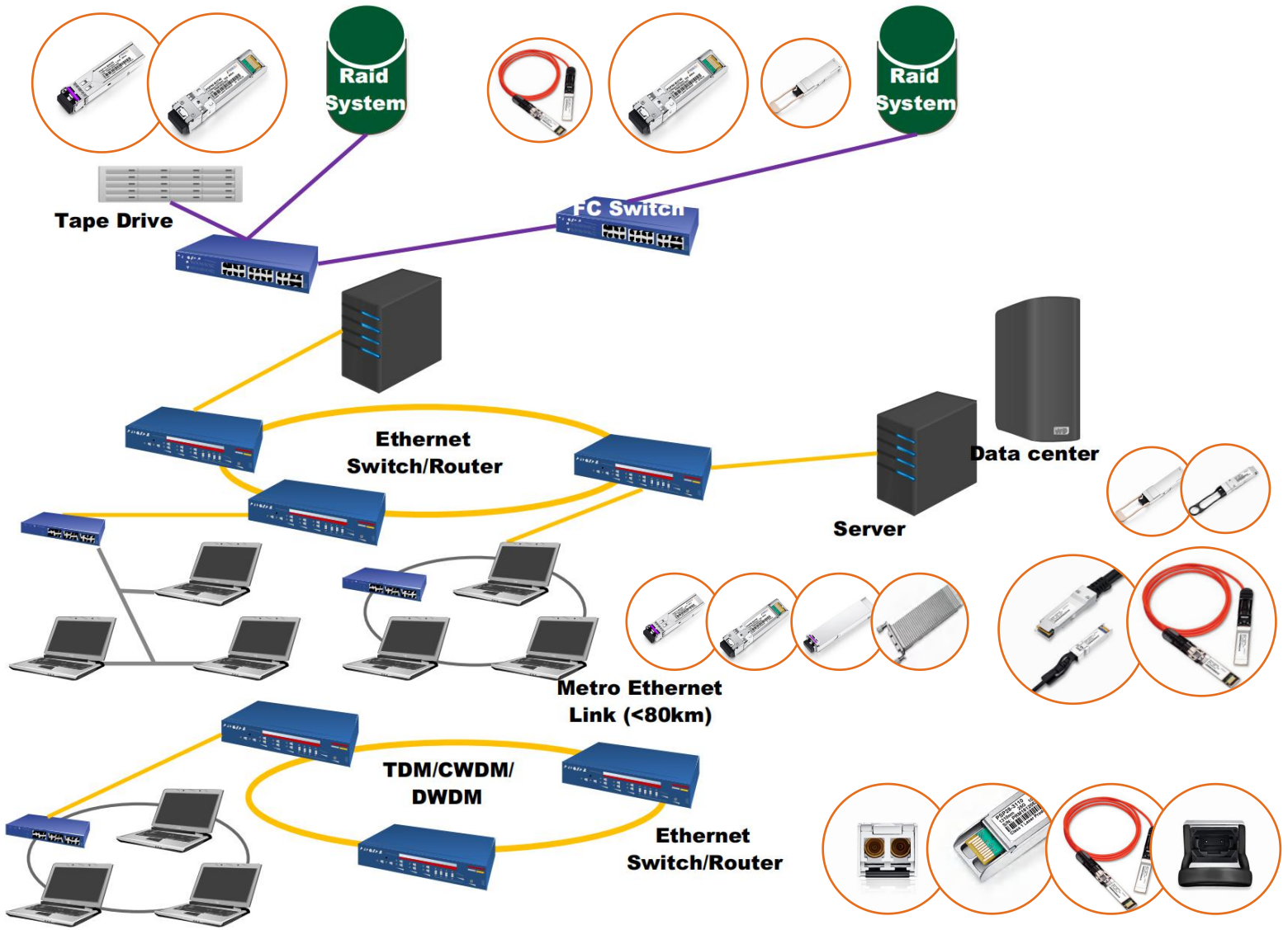

Telecom products



Metro network



4G-LTE



5G Fronthaul

PRIMUS IT Offering for 5G Network
Typical characteristics are industrial grade temperatures

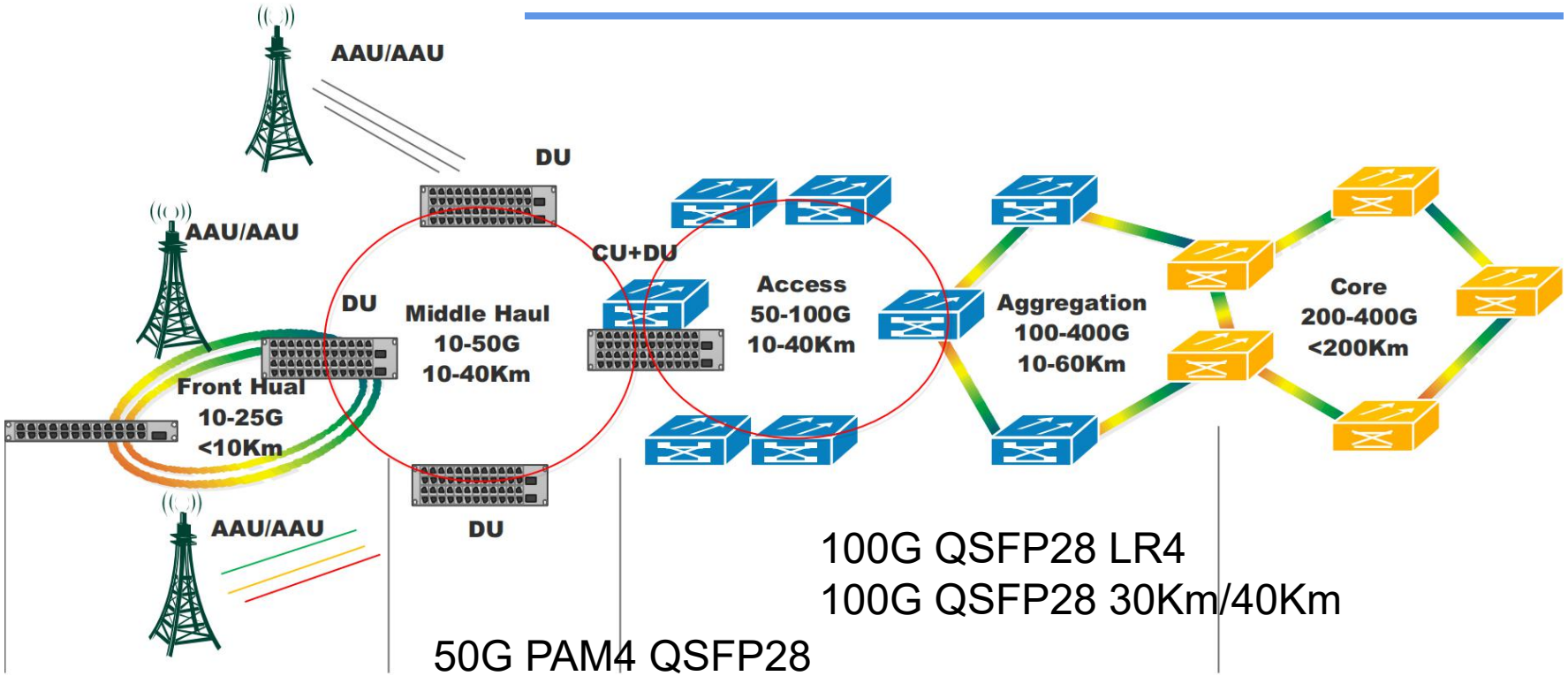

100G QSFP28 LR4
100G QSFP28 30Km/40Km

50G PAM4 QSFP28
LR/ER

25G SFP28 SR/LR/BIDI/LWDM/CWDM/DWDM
100G QSFP28 SR4

Compatible brands

PRIMUSIT







































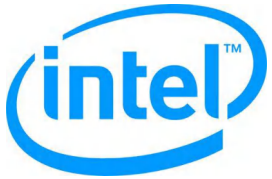





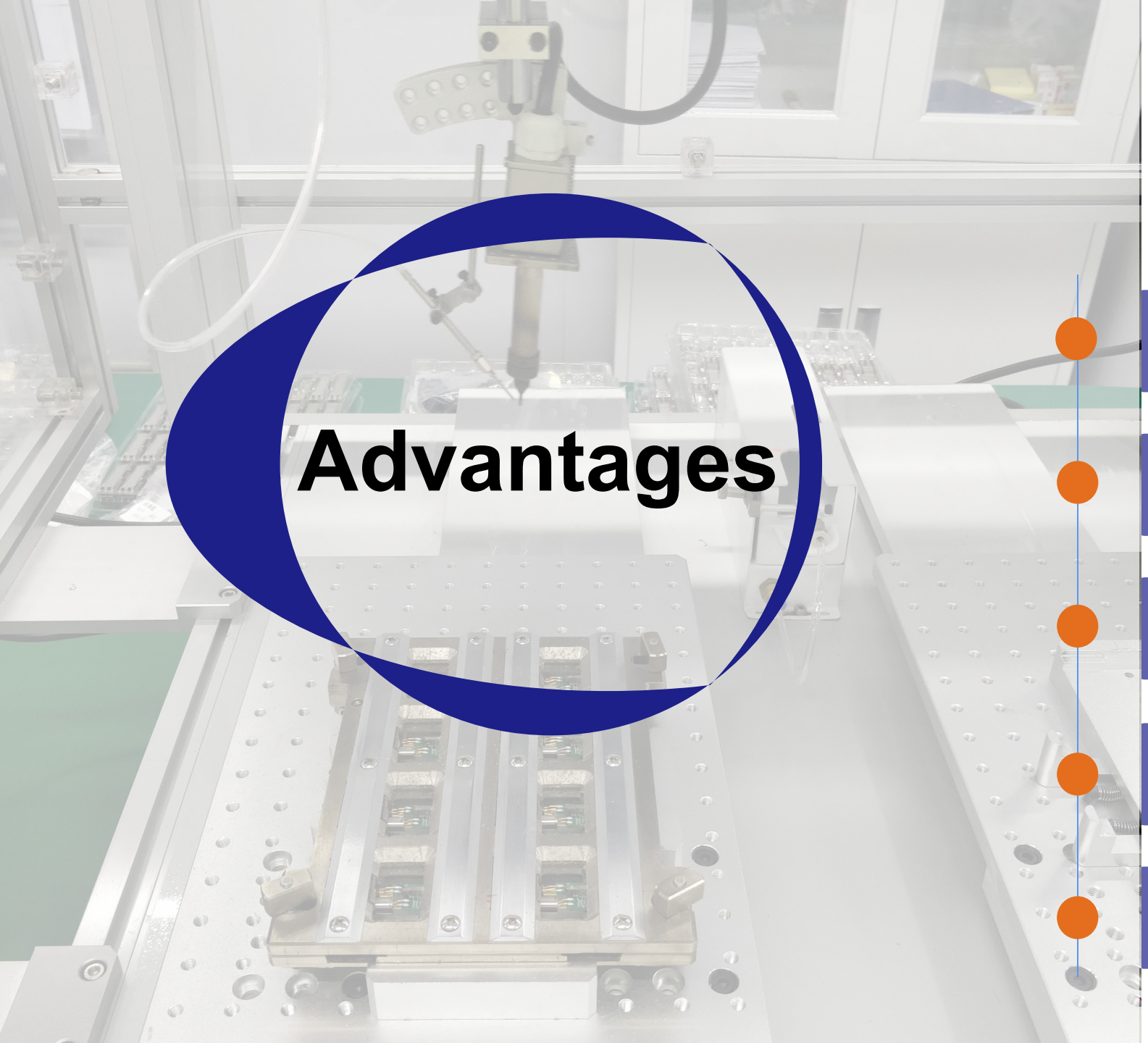

Advantages

PRIMUSIT

- Production capacity
- R & D
- Quality control
- Rich experience
- Supports we provide

Production capacity



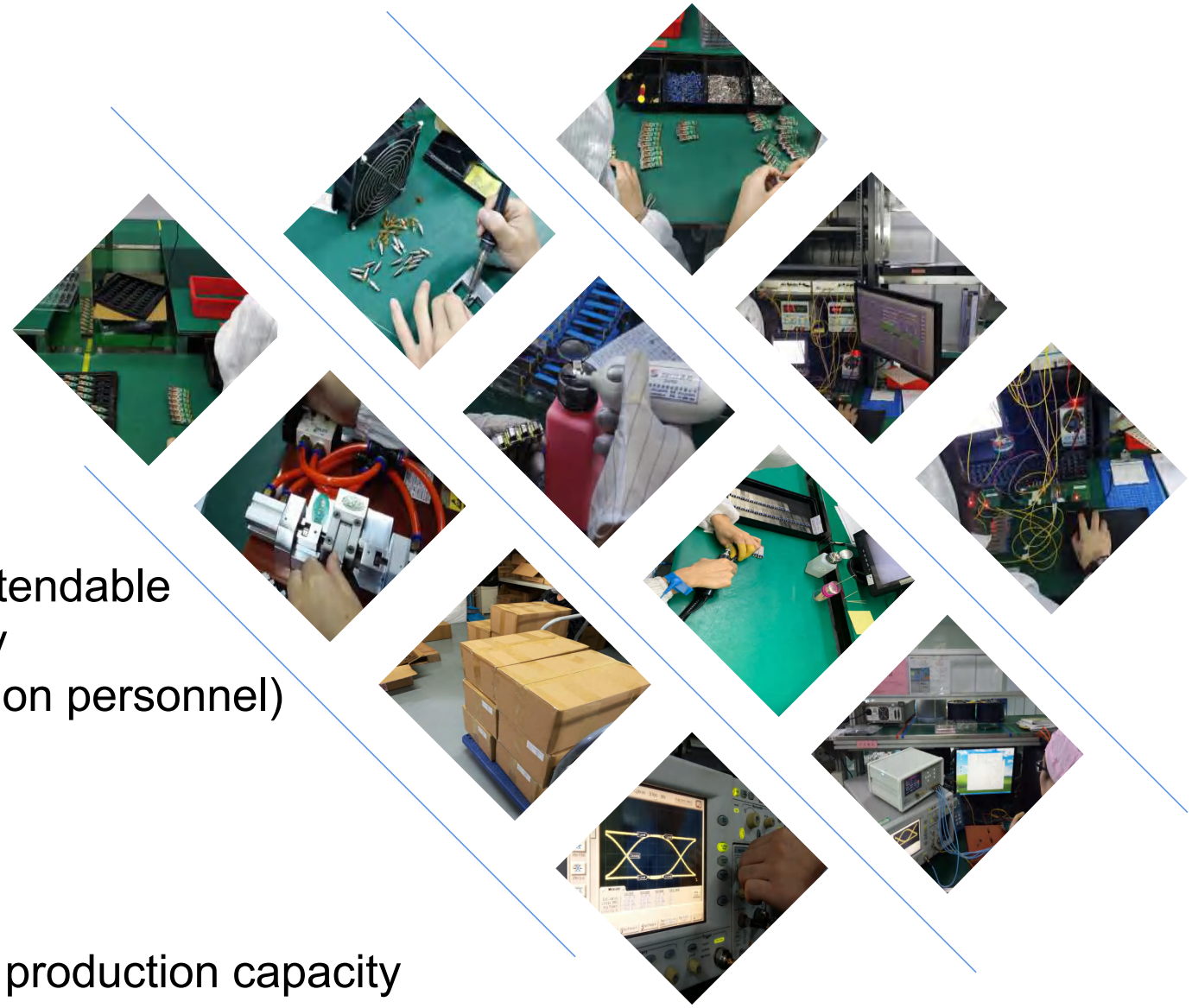

- Factory area : 2000㎡ in using ,2000㎡ extendable
- Up to 200K pcs /month production capacity
- Total employees: 90 (including 50 production personnel)
- Regular inventory : 20K-50K pcs
- General lead time :1-2 weeks
- Urgently lead time: 3 days
- Green channel for urgent orders
- Bring in automation equipment to increase production capacity

R & D strength

Core member of R & D with 15 years industry experience

The current number of R & D is 10

R & D investment is increasing every year
4.7M RMB in 2017,6 M RMB in 2018 ,7.2M RMB in 2019

Independent intellectual property product design
Automated Test System with Intellectual Property from 1G-100G

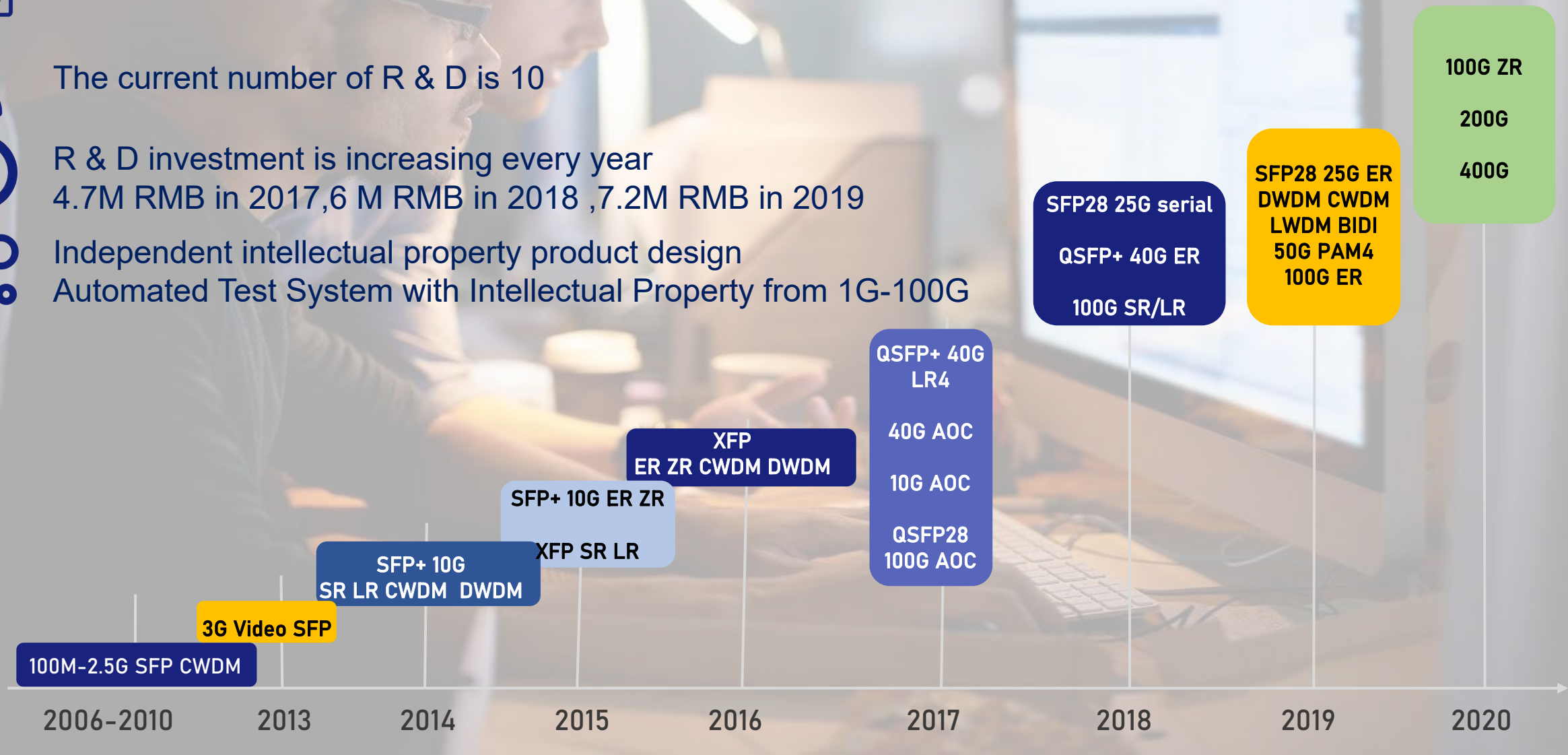

Quality control



1.A+ class ,brand new quality level raw materials

2.Standardized and strictly supplier management system

3.Complete quality control system throughout IQC-IPQC-FQC-OQC

R & D equipments

PRIMUSIT


















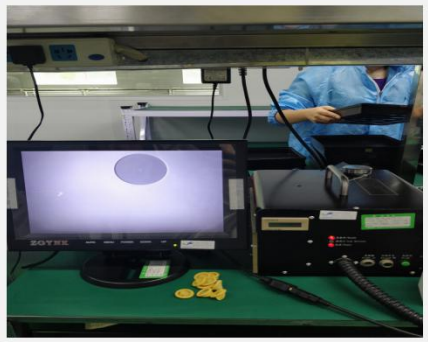



Rich experience



Cooperate with diversified global customer types more than 15 years
including **distributors, system integrators, solution providers, carriers**, etc.
Have a good understanding of their different operating concepts and business models of various ICT companies.

Supports we provide



Price support



Lead time support

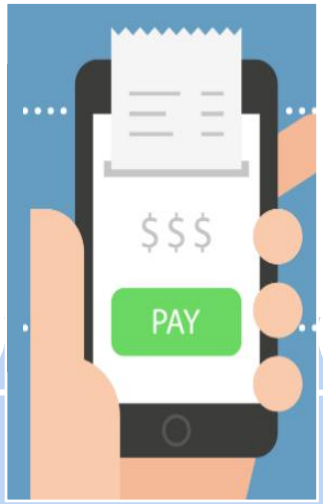

Flexible payment



Joint exhibition

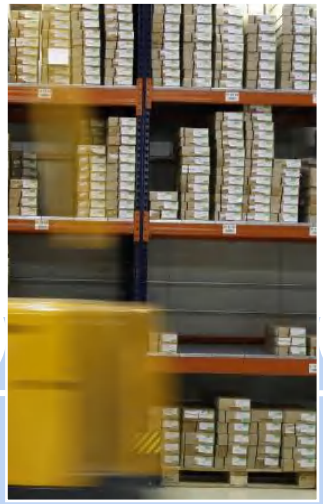

Local warehouse

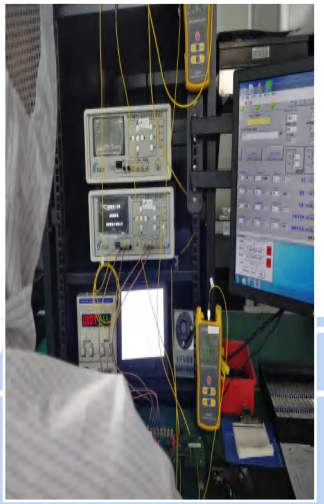

One-to-one service

- Completed end-to-end pre-sale and after-sales support and technical support
- Customized solutions cover every aspects of products included techinical ,packaging ,labels etc



Vision

- Deep into the 5G market
- Expand the market area to the Belt and Road
- Great company with exemplary levels of service