IMD®
INNOVATION FOR YOU

NEW

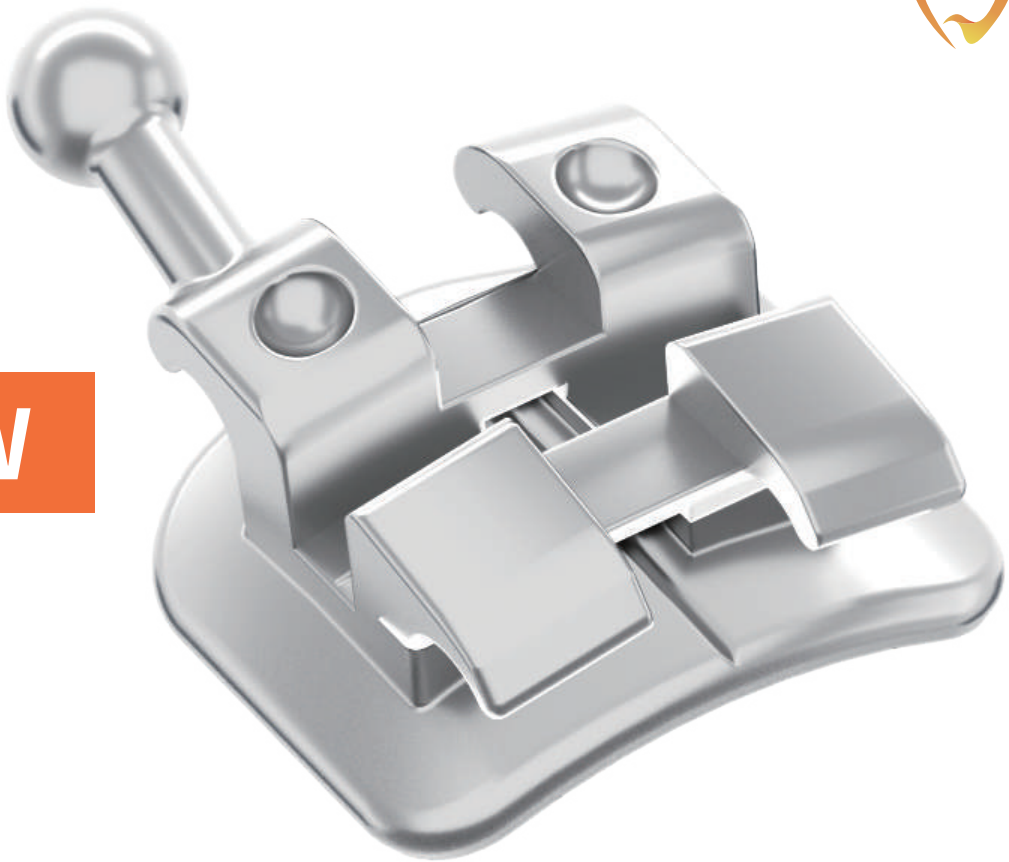

Omni Plus Twin Metal Brackets

Make Orthodontic Technique More Efficient and Versatile









- Clear vertical scribe line runs entire bracket for better bracket position
- Metal injection molding for precision
- Integrated ball hook design
- Torque in base
- Roth Rx. is available now
- Vertical slot (V-slot) design permits the simple addition of a variety of useful auxiliaries and biomechanical adjuncts like the below pictures show
- 80-gauge double mesh layers base for increasing bonding strength

OMNI PLUS TWIN METAL - Foil Mesh bracket- 80 Gauge

Clear vertical scribe line runs entire bracket for better bracket position

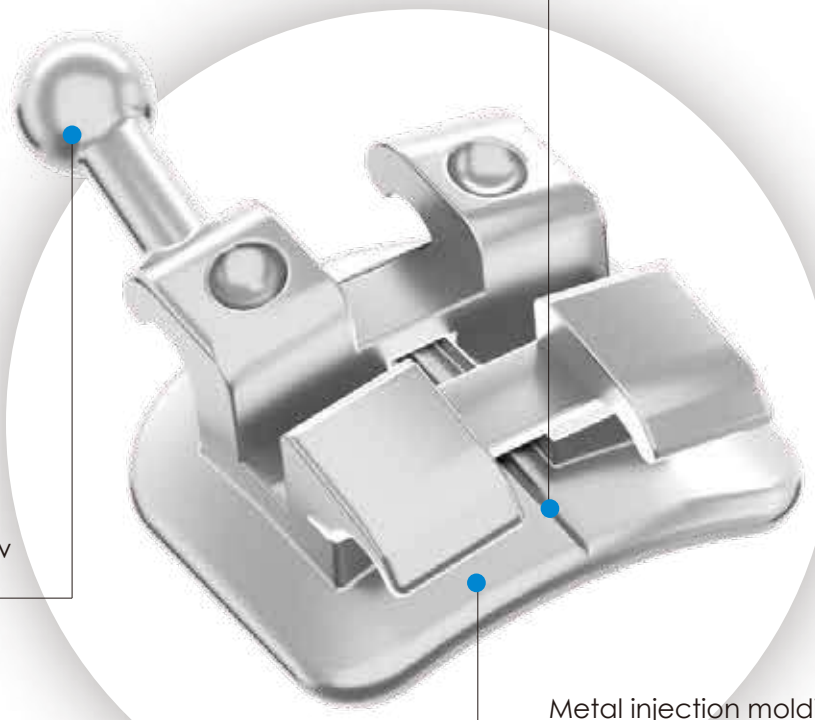

Integrated ball hook

Torque in base

Roth Rx. is available now

Metal injection molding for precision



Vertical slot (V-slot) design permits the simple addition of a variety of useful auxiliaries and biomechanical adjuncts like the below pictures show



80-gauge double mesh layers base for increasing bonding strength

Omni Plus Twin Metal Brackets



BRACKET I.D. CHART

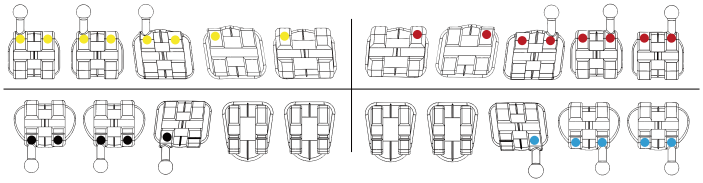

Omni Plus series Roth* bracket kits

	.018 in.	.022 in.
U/L 5*5	KIT16-211-00	KIT16-221-00
U/L 5*5 Hook on 3	KIT16-211-00CHK	KIT16-221-00CHK
U/L 5*5 Hook on 3/4/5	KIT16-211-00CBCHK	KIT16-221-00CBCHK

MAXILLARY

Roth *

Tooth	Torque	Angle	Offset	M/D in mm	R/L	Color Code	Hook	Item Number .018	Item Number .022
U1	+12°	+5°	0°	3.7	UR	yellow	-	16-211-11	16-221-11
					UL	red		16-211-21	16-221-21
U2	+8°	+9°	0°	3	UR	yellow	-	16-211-12	16-221-12
					UL	red		16-211-22	16-221-22
U3	-2°	+7°	0°	2.9	UR	yellow	-	16-211-13	16-221-13
					UL	red		16-211-23	16-221-23
					UR	yellow	D	16-211-13HK	16-221-13HK
					UL	red		16-211-23HK	16-221-23HK
U4	-7°	+0°	0°	3	UR	yellow	-	16-211-14	16-221-14
					UL	red		16-211-24	16-221-24
					UR	yellow	D	16-211-14HK	16-221-14HK
					UL	red		16-211-24HK	16-221-24HK
U5	-7°	+0°	0°	3	UR	yellow	-	16-211-15	16-221-15
					UL	red		16-211-25	16-221-25
					UR	yellow	D	16-211-15HK	16-221-15HK
					UL	red		16-211-25HK	16-221-25HK

MANDIBULAR

Tooth	Torque	Agulation	Rotation	M/D in mm	R/L	Color Code	Hook	Item Number .018	Item Number .022
L1	0°	0°	0°	2.5	LR	black	-	16-211-41	16-221-41
					LL	blue		16-211-31	16-221-31
L2	0°	0°	0°	2.5	LR	black	-	16-211-42	16-221-42
					LL	blue		16-211-32	16-221-32
L3	-5°	7°	0°	3	LR	black	-	16-211-43	16-221-43
					LL	blue		16-211-33	16-221-33
					LR	black	D	16-211-43HK	16-221-43HK
					LL	blue		16-211-33HK	16-221-33HK
L4	-11°	0°	0°	3	LR	black	-	16-211-44	16-221-44
					LL	blue		16-211-34	16-221-34
					LR	black	D	16-211-44HK	16-221-44HK
					LL	blue		16-211-34HK	16-221-34HK
L5	-17°	0°	0°	3	LR	black	-	16-211-45	16-221-45
					LL	blue		16-211-35	16-221-35
					LR	black	D	16-211-45HK	16-221-45HK
					LL	blue		16-211-35HK	16-221-35HK

* Our version of the Roth Rx is not implied to be an exact version of any other system,nor do we claim any endorsement of Dr.Roth.

BRACKET SYSTEMS

Omni Plus Twin Metal Brackets

BRACKET I.D. CHART

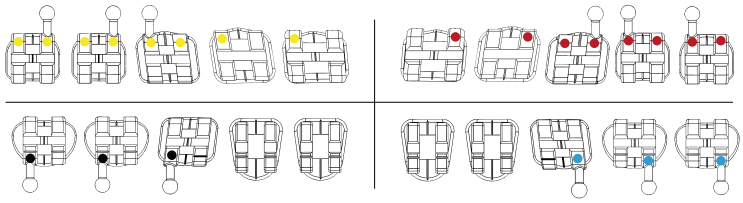



Omni Plus series McBeTr* bracket kits

	.018in.	.022in.
U/L 5*5	KIT16-311-00	KIT16-321-00
U/L 5*5 Hook on 3	KIT16-311-00CHK	KIT16-321-00CHK
U/L 5*5 Hook on 3/4/5	KIT16-311-00CBCHK	KIT16-321-00CBCHK

Maxillary — McBeTr*

Tooth	Torque	Angulation	Offset	M/D in mm	R/L	Color Code	Hook	Item Number .018	Item Number .022
U1	+17°	+4°	0°	3.75	UR	yellow	-	16-311-11	16-321-11
					UL	red		16-311-21	16-321-21
U2	+10°	+8°	0°	3.00	UR	yellow	-	16-311-12	16-321-12
					UL	red		16-311-22	16-321-22
U3	-7°	+8°	0°	2.90	UR	yellow	-	16-311-13	16-321-13
					UL	red		16-311-23	16-321-23
					UR	yellow	D	16-311-13HK	16-321-13HK
					UL	red		16-311-23HK	16-321-23HK
U4	-7°	+0°	0°	3.00	UR	yellow	-	16-311-14	16-321-14
					UL	red		16-311-24	16-321-24
					UR	yellow	M	16-311-14HK	16-321-14HK
					UL	red		16-311-24HK	16-321-24HK
U5	-7°	+0°	0°	3.00	UR	yellow	-	16-311-15	16-321-15
					UL	red		16-311-25	16-321-25
					UR	yellow	M	16-311-15HK	16-321-15HK
					UL	red		16-311-25HK	16-321-25HK

Mandibular

Tooth	Torque	Angulation	Rotation	M/D in mm	R/L	Color Code	Hook	Item Number .018	Item Number .022
L1	-6°	0°	0°	2.50	LR	black	-	16-311-41	16-321-41
					LL	blue		16-311-31	16-321-31
L2	-6°	0°	0°	2.50	LR	black	-	16-311-42	16-321-42
					LL	blue		16-311-32	16-321-32
L3	-6°	+3°	0°	3.00	LR	black	-	16-311-43	16-321-43
					LL	blue		16-311-33	16-321-33
					LR	black	D	16-311-43HK	16-321-43HK
					LL	blue		16-311-33HK	16-321-33HK
L4	-12°	+2°	0°	3.00	LR	black	-	16-311-44	16-321-44
					LL	blue		16-311-34	16-321-34
					LR	black	D	16-311-44HK	16-321-44HK
					LL	blue		16-311-34HK	16-321-34HK
L5	-17°	+2°	0°	3.00	LR	black	-	16-311-45	16-321-45
					LL	blue		16-311-35	16-321-35
					LR	black	D	16-311-45HK	16-321-45HK
					LL	blue		16-311-35HK	16-321-35HK

* Our version of the McLaughlin, Bennett, and Trevisi system is not implied to be an exact version of any other system, nor do we claim any endorsement of doctors McLaughlin, Bennett, and Trevisi.

IMD®
INNOVATION FOR YOU

INNOVATIVE MATERIAL AND DEVICES, INC.
Add: Building#5, NO. 615 Fengdeng Rd., Jiading District,
Shanghai 201801, China.
http://www.imdmedical.com/