Model	UKJ90°C6A	Name	Keystone jack	Document NO.	CL-KJU-C6A15	Version	REV.01

90 ° C6A Unshielded Keystone jack

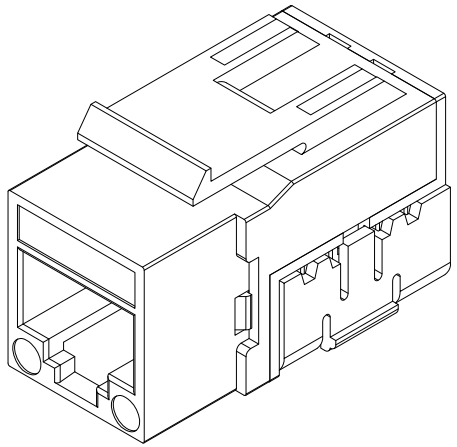

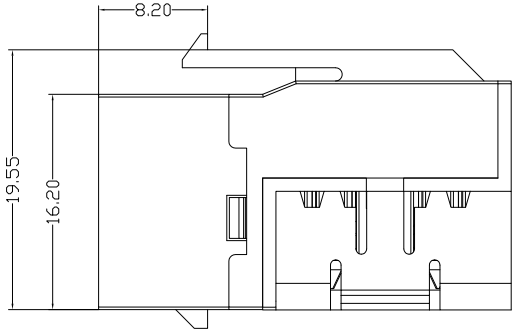

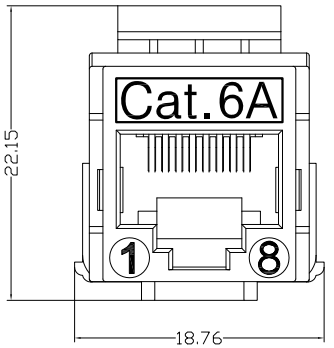

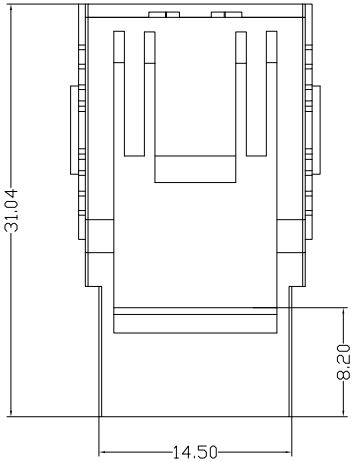

NOTES:

ELECTRICAL:

1.	VOLTAGE RATING	: 125 VAC.
2.	CURRENT RATING	: 1.5 AMP.
3.	CONTACT RESISTANCE	: 100 MILLIOHMS MAX.
4.	INSULATION RESISTANCE	: 1000 MEGOHMS MIN. @ 500 VDC.
5.	DIELECTRIC STRENGTH	: 750 VAC 60Hz, 1MIN.

MECHANICAL:

1.	HOUSING MATERIAL	: ABS UL94V-0.
2.	INSERT MATERIAL	: PBT+20% GF. UL94V-0.
3.	PCB MATERIAL	: FR-4 THICKNESS 1.2 mm.
4.	CONTACT MATERIAL	: PHOSPHOR BRONZE STAMP PIN t=0.35 mm WITH GOLD PLATING 50um
5.	IDC CONTACT MATERIAL	: PHOSPHOR BRONZE t=0.50 mm WITH NICKEL PLATING
6.	WIRE	: #24~26 AWG.

ENVIRONMENTAL:

1.	STORAGE	: -40°C TO +85°C.
2.	OPERATION	: 0°C TO 70°C.

Drawn By:Zhengjun Chen Checked By:Alfred Approved By: Ganglin Shao