

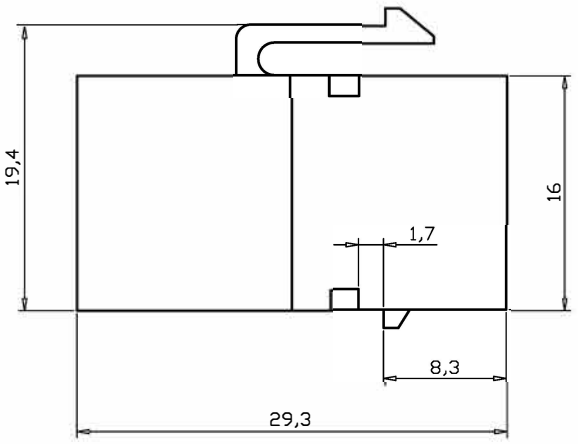

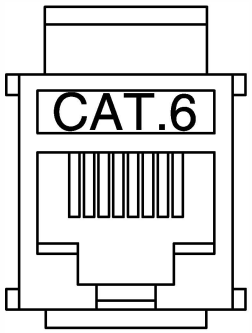

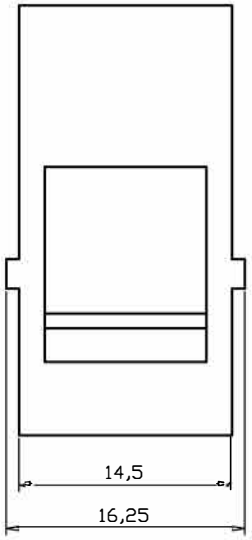

Material:
1.RJ45 Housing:PC
2.Phosphor Bronze with 50-60 micro-inch Nickel plated.
3.Contact area: 3-50 micro-inch Gold plated
4.IDC Housing: PC
5.IDC Terminal material & finished:
5-1.Phosphor Bronze with 50 micro-inch Tin-Lead plated. Over 50-60 micro-inch Nickel plated.
5-2.Use for 22-26 AWG stranded and solid wire
6.Jack Bracket Set:ABS Black color
7.PCB: FR4 UL 94V0

Performance:
a.The IDC color combine two wirings of T568A & T568B.
b.Insertion Force: 900 grms for 8 contacts
c.Retention Strength: 7.7kgs between Jack and Plug
d. Operation Temperature: -40°C to 70°C.
e.Durability:
e-1.Jack:750 cycles Plug-Jack mating and unmating test.
e-2. IDC: Max 200 punching times.

TITLE:	INCH	MM	
.X	.015	.30	
.XX	.010	.10	TITLE: Inline Coupler
.XXX	.005	.05	
DRAWN BY	MA		P/N: CL-KJU-C6I5
CHECK BY			SCALE 1:1 / UNIT MM / REV
APPD BY			SHEET 1/1 / DATE 2017/05/05 / DWG NO: