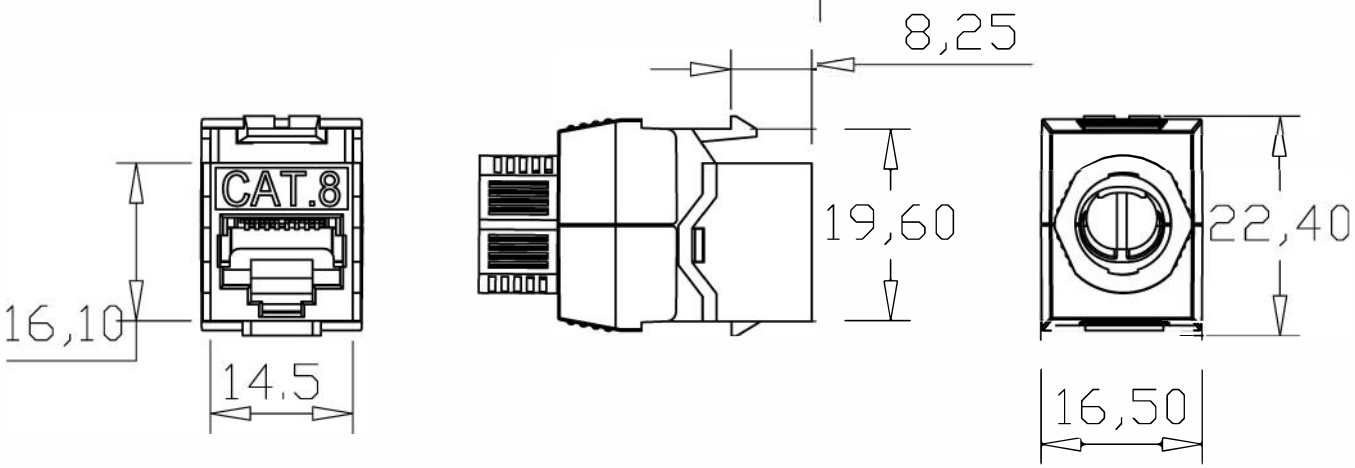

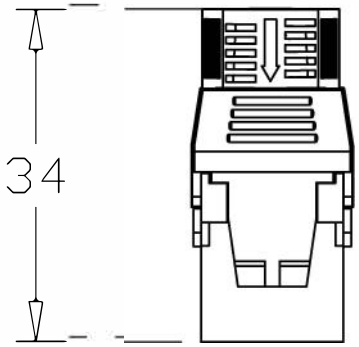

CAT8 Class I RJ45 plug to be assembled in the field

- FTP TYPE: 1 piece Design
- Easy Assembly - easily terminated in the field in 2 minute without any special tools
- Wire Connection: Stranded wire AWG 27/7 to 22/7, wire diameter from 0.46 to 0.76 mm
- Wire Connection: Solid wire AWG 26/1 to 22/1, wire diameter from 0.4 to 0.76 mm
- it Suitable according to IEEE 802.3an
- Suitable for Power over Ethernet(PoE, PoE plus, and UPoE)
- Cable Jacket Diameter from 6 to 9.5 mm
- Adjustable Strain Relief (6mm to 9.5mm Cable OD)
- Load Bar for Faster and Easier Wire Pattern Termination
- Reconnectable

. Operation temperature:-40℃ to 60℃, Relative humidity: 85%(30℃), Air pressure: 70-106Kpa.

. Gold Plated Phosphor Bronze Blade: phosphor bronze and gold plating (3~50uinch), mating durability not less than 750 cycles ;

. Anti-burn performance: product made from Kirsite \ PC or PCB(UL94V-0), meeting the international standard ;

. Intermediate resistance: no more than 20m ohm in normal atmosphere pressure (not including bulk resistor) ;

. Insulated resistance: no less than 1,000M ohm in normal atmosphere pressure ;

. Intensity of anti-currency: DC 1,000V (AC,700V), no puncture and flash-over phenomenon in one minute ;

- Retention strength: 7.7kg between jack and plug.
- Label: clear label to ensure easy to management ;

TITLE:	INCH	MM	Copperled Technology Co.,Ltd		
.X	.015	.30			
.XX	.010	.10	TITLE: Cat.8 Keystone Jack		
.XXX	.005	.05			
DRAWN BY	MA		P/N: – –		
CHECK BY			SCALE 1:1		REV
			UNIT MM		
APPD BY			SHEET 1/1	DWG NO:	
			DATE 2019		