Shape Charateristics

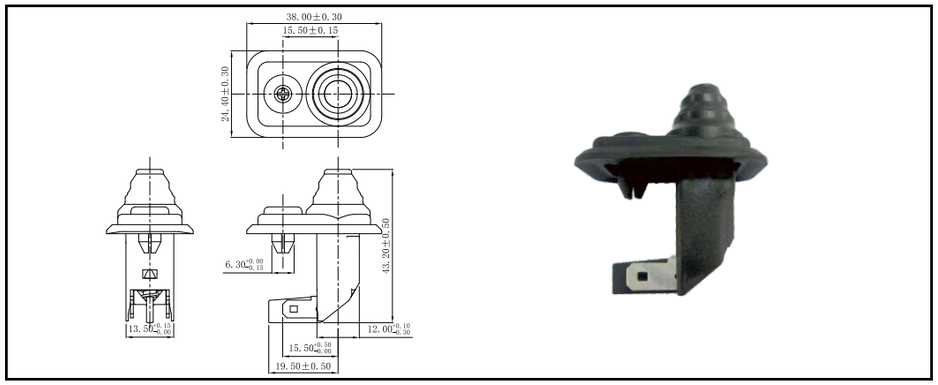

Circuit

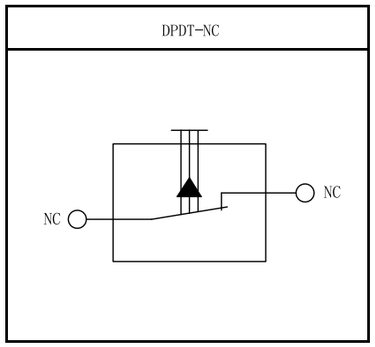

Mounting Hole location

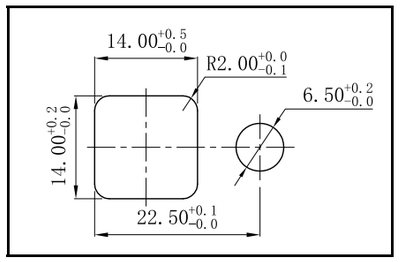

Dimensions and Operating Characteristics



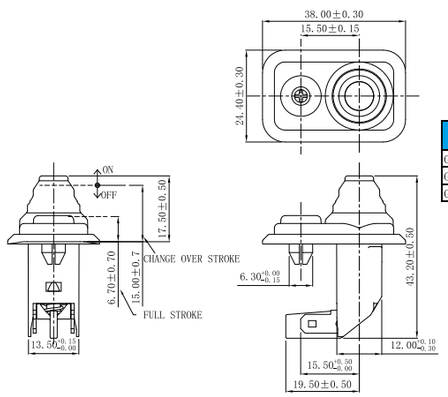

operating parameter

model number	FP (mm)	OP (mm)	OF Max. (N)	PT (mm)	TTP (mm)
G2204-10AA	17.5±0.5	15±0.7	10	2.5±1.2	8.7±0.7
G2204-15AA	17.5±0.5	15±0.7	15	2.5±1.2	8.7±0.7
G2204-20AA	17.5±0.5	15±0.7	20	2.5±1.2	8.7±0.7

SWP Series

Door Switch



Features

-Single Pole Construction
-Small Compact Size
-Long Travel
-UL/ENEC Approval

Application

◆Mainly used in the lighting and ventilator control of home appliance, such as refrigerator, freezer and cooler etc., and also widely used in the power supply control of microwave oven, disinfection cabinet, air conditioner and other home appliance

Parameters:

Rating		0.25A 250VAC 0.5A 24VDC
Operating Frequency	Electrical	10～30 cycles/minute
	Mechanical	120 cycles/minute
Contact Resistance(Initiative)		100mΩMax
Insulation Resistance(at 500VDC)		100mΩMin
Operating Temperature		-25° C~+60° C
Storge Temperature		-10° C～+45° C
Storage Humidity		10%~85%
Service Life	Electrical	100, 000 cycles
	Mechanical	200,000 cycles

SWP Series Door Switch Ordering Instruction

SWP-SEL-01 – TXXX

Special Design Code

Customized according to customer requirements, unified in the technician login, the custom code is T+serial numberXXX, such as:T001

■Terminal Type

D#: Solder Terminals

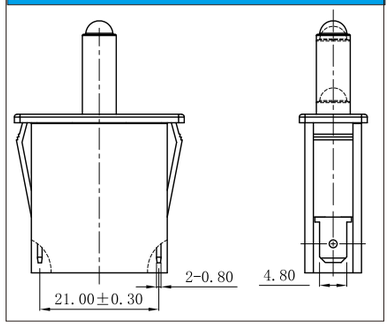

Suggested Operating Dimenion of the Mounting Panel

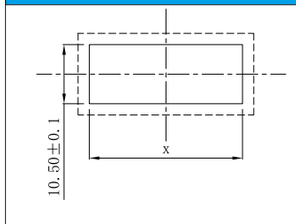

width	dimension "x"
0.7-1	27.2±0.1
1-2	27.5±0.1

Circuit Configuration

Circuit Diagram

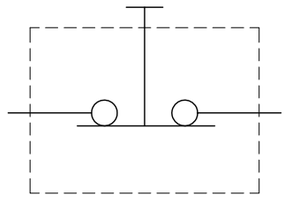

■Dimension

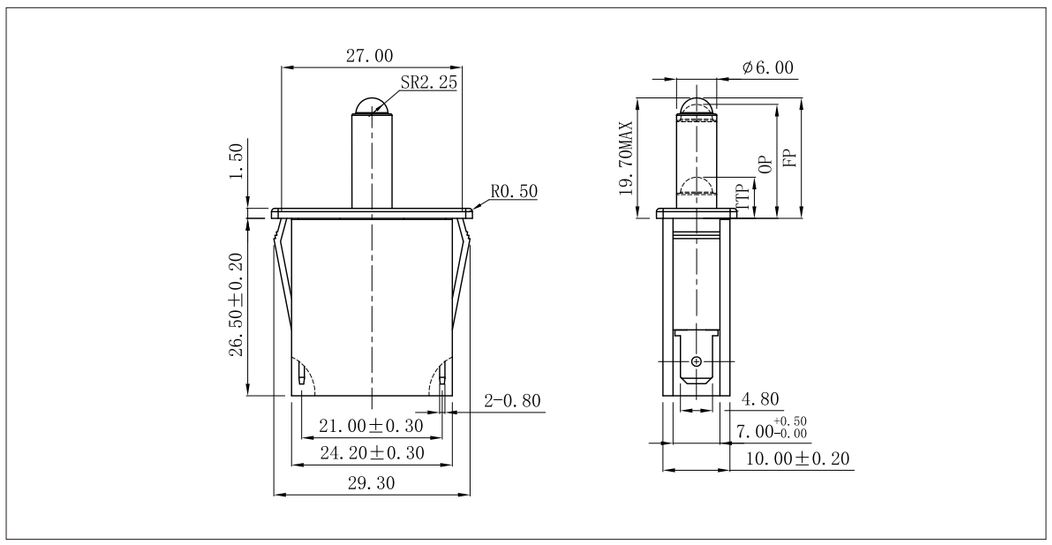

ZE-200S

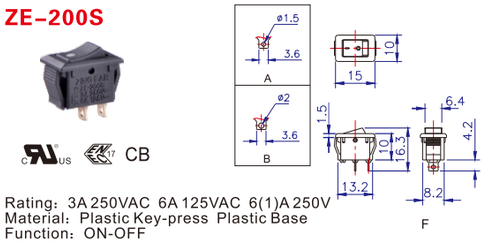

Rating：3A 250VAC 6A 125VAC 6(1)A 250V
Material：Plastic Key-press Plastic Base
Function：ON-OFF

ZE-200

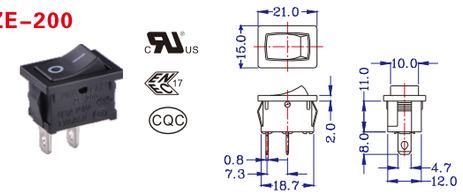

Rating：6A 250VAC /10A 125VAC / 5A 125VL / 3A 14VT / 6(1)A 250VAC
Material：Plastic Key-press Plastic Base
Function：ON-OFF (Long Terminal)

ZE-200-1

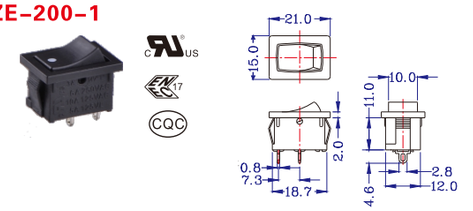

Rating：6A 250VAC /10A 125VAC / 5A 125VL / 3A 14VT / 6(1)A 250VAC
Material：Plastic Key-press Plastic Base
Function：ON-OFF(Short Terminal)

ZE-200-2

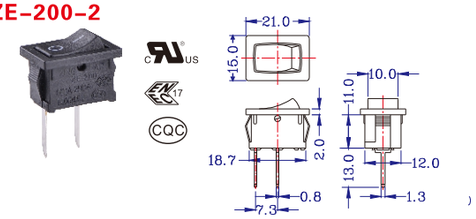

Rating：6A 250VAC /10A 125VAC / 5A 125VL / 3A 14VT / 6(1)A 250VAC
Material：Plastic Key-press Plastic Base
Function：ON-OFF (Long Thin Terminal)

ZE-200-3

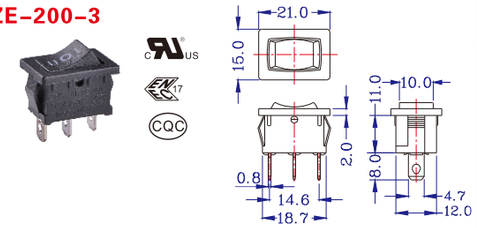

Rating：6A 250VAC / 10A 125VAC / 5A 125VL / 6(1)A 250VAC
Material：Plastic Key-press Plastic Base
Function：ON-OFF-ON (Long Terminal)

ZE-200-3-1

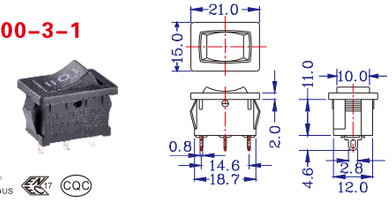

Rating：6A 250VAC / 10A 125VAC / 5A 125VL / 6(1)A 250VAC
Material：Plastic Key-press Plastic Base
Function：ON-OFF-ON Short Terminal

ZE-201S

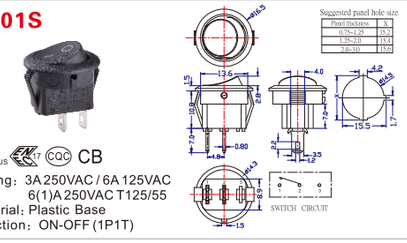

Rating：3A 250VAC / 6A 125VAC
6(1)A 250VAC T125/55
Material：Plastic Base
Function：ON-OFF (1P1T)

ZE-201

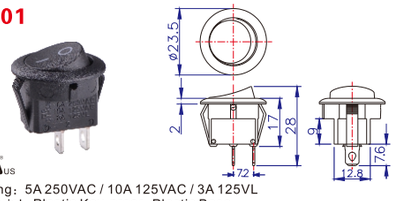

Rating：5A 250VAC / 10A 125VAC / 3A 125VL
Material：Plastic Key-press Plastic Base
Function：ON-OFF/(ON)-OFF/ON-(OFF)

ZE-201-1 (With Neon Light)

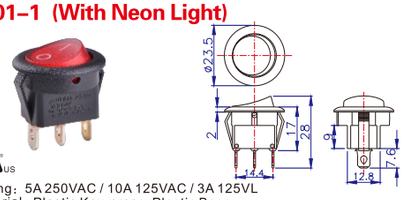

Rating：5A 250VAC / 10A 125VAC / 3A 125VL
Material：Plastic Key-press Plastic Base
Function：OFF (with Neon Light)(with LED Light)

ZE-201-3

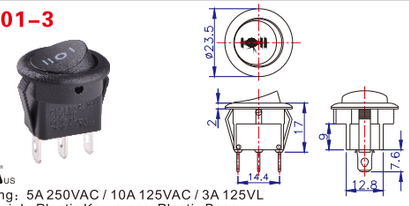

Rating：5A 250VAC / 10A 125VAC / 3A 125VL
Material：Plastic Key-press Plastic Base
Function：OFF-ON/ON-OFF-(ON)/(ON)-OFF-(ON)/ON-ON/(ON)-(ON)

ZE-201-3D

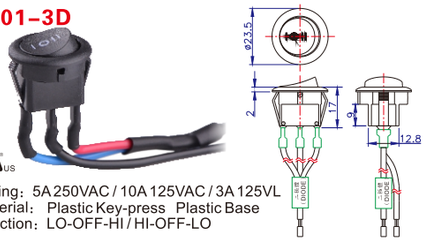

Rating：5A 250VAC / 10A 125VAC / 3A 125VL
Material：Plastic Key-press Plastic Base
Function：LO-OFF-HI / HI-OFF-LO