GT04 Series Keyswitch Ordering Instruction

GT04	A	1	B	N	W
Switch Type	Contact Material	Code Of Operating Force	Operating Characteristics and Key Style	LED Diode	Mounting Options
GT04 Series Keyswitch	A Au Alloy	1 OF=50±20gf	A Momentary, single pole, standard Keyswitch black key stem	N No LED No Diode	W With pins
	B Ag Alloy	... Special	B Momentary, single pole, tactile feel keyswitch, red key stem	D No LED With Diode	... Speical
	... Special		... Special	F RGB full color LED	
				... Special	

Dimensions

Unit:mm

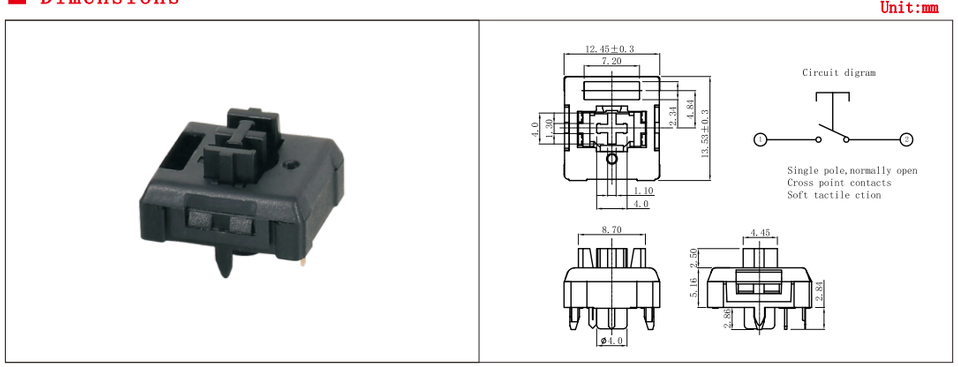

Mounting Options

PCB(with pins)

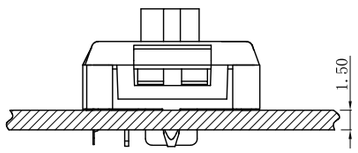

Circuit Board Layouts

◆ PCB(With pins)

SMD Mounting

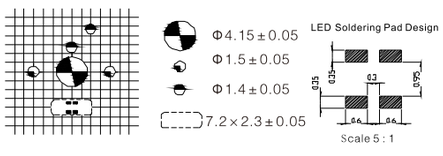

DIP Mounting

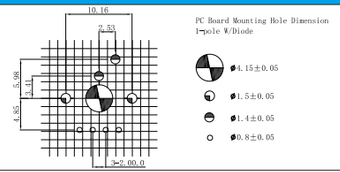

GT06 Mechanical Keyboard Switch-4mm Traval



Features

- Desktop profile, 0.60 inch(15.2mm) from PCB(no keycap)
- Choice of free:linear, soft tactile, clicktactile
- frame mount
- Long life up to 80 million operation cycles
- Light guide column light guide, switch light soft not dazzling
- 12V AC/DC Maximum
- Current Rating:10mA
- Insulation Resistance:<100MΩ under 100VDC

Applications

Mainly applicated in computer keyboards, Cash registers, Industrial equipment and Man-Machine interfaces

Specification and Parameters

Electrical Characteristics	Rating	12 VDC/AC Max. 10mA AC/DC Max
	Contact Resistance	200mΩMax(25mΩ typical)(Initial Value)
	Insulation Resistence	100MΩMin
	Voltage Resistance	AC 500V(50-60Hz) 1Minute
	Eletrical life	Over80, 000, 000 cycles(Load)
	Bounce Time	5 msec(Operation speed at 400mm/sec)
Mechanical Characteristics	Operating Force	See Detail Spec
	Pre-travel	2.0±0.4mm
	Total Travel	$4.0^{+0}_{-0.3}$mm
	Mechanical Life	Over 80,000,000 cycles(No Load)
	Operating Temperature Range	-40° C~+80° C
	Ambient Humidity	≤85%RH

GT06 Series Keyswitch Ordering Instruction

GT06	A	1	A	N	W
Switch Type	Contact material	Code of operating force	Operating Characteristics, and Key Style	LED Diode	PCB mounting pins
GT06 GT06 Series Keyswitch	A Au Alloy	1 OF=60±20gf	A Momentary, single pole, standard keyswitch, linear, black key stem	N Single color	W With pins
	B Ag Alloy	2 OF=80±25gf	B Momentary, single pole, standard keyswitch, soft tactile brown key stem	F Full color RGB	N No pins (with metal frame)
	R Customer Special	3 OF=120±25gf	D Momentary, single pole, Click tactile feel, blue key stem	T SMT LED	
		...	E Momentary, single pole, standard keyswitch, linear, red key stem	... Others	

Dimensions

Unit:mm

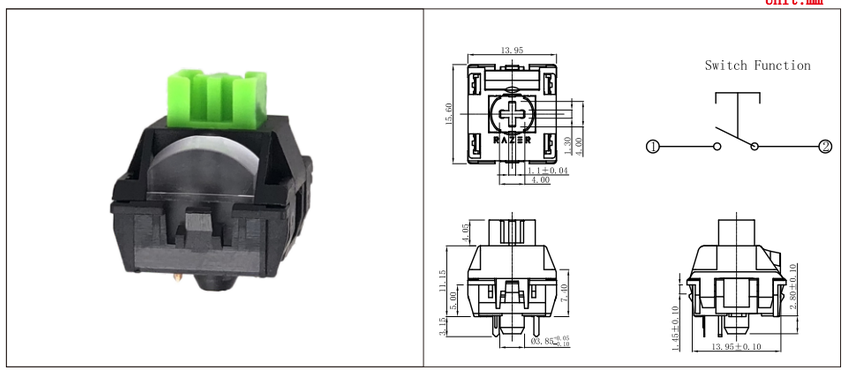

Mounting Options

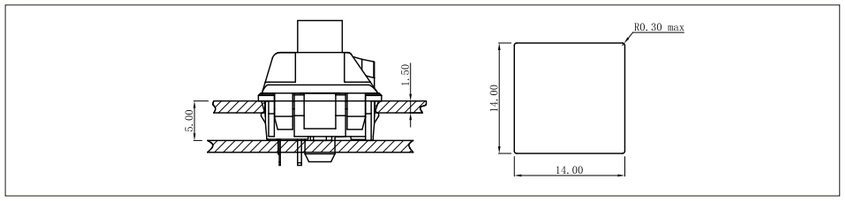

Circuit Board Layouts

◆ Keyswitch without flxation pins

Gride line spacing=1.27mm

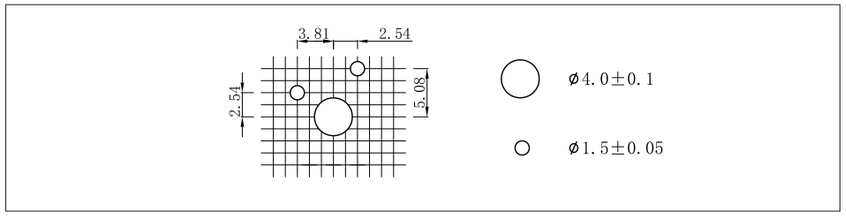

GT08-Ultrathin Mechanical Keyboard Switch-1.6mm Travel



Features

-With tactile sound or smooth mute for selection
-Feel smooth and natural, no touch key angle card lag phenomenon
-Life can reach more than 10 million times
-Can be equipped with RGB-LED lights added colorful backlight
-Patent products, the world's first

Applications

Notebook computer keyboards

Specification and Parameters

Electical Characteristics	Rating	12V DC/AC Max. 10mA AC/DC max
	Initial Contact Resistance	200mΩMax
	Insulation Resistance	100mΩMin
	Voltage Resistance	AC 100V(50-60Hz)1 Minute
	Electrical Life	Over20, 000, 000 cycles(Load)
	Bounce Time	(operation speed at<400mm/sec)
Parameters	Tactile Force(TF)	70±15gf
	Tactile Position(TP)	0.65±0.2mm
	Operating Position(OP)	(TP±0.05) ≤OP≤1.2mm
	Total Travel(TT)	1.6±0.3mm
	Return Force(RF)	RF=20gf Min
	Mechanical Life	Over 10,000,000 Cicles(NO Load)
	Operating Temperature Range	-40° C~+80° C
	Ambient Humidity	≤85%RH
	Hand soldering Condition	3Sec Max. 360° C±10° C

Travel-force curve

