GT06 Series Keyswitch Ordering Instruction

GT06	A	1	A	N	W
Switch Type	Contact material	Code of operating force	Operating Characteristics, and Key Style	LED Diode	PCB mounting pins
GT06 GT06 Series Keyswitch	A Au Alloy	1 OF=60±20gf	A Momentary, single pole, standard keyswitch, linear, black key stem	N Single color	W With pins
	B Ag Alloy	2 OF=80±25gf	B Momentary, single pole, standard keyswitch, soft tactile brown key stem	F Full color RGB	N No pins (with metal frame)
	R Customer Special	3 OF=120±25gf	D Momentary, single pole, Click tactile feel, blue key stem	T SMT LED	
		...	E Momentary, single pole, standard keyswitch, linear, red key stem	... Others	

Dimensions

Unit:mm

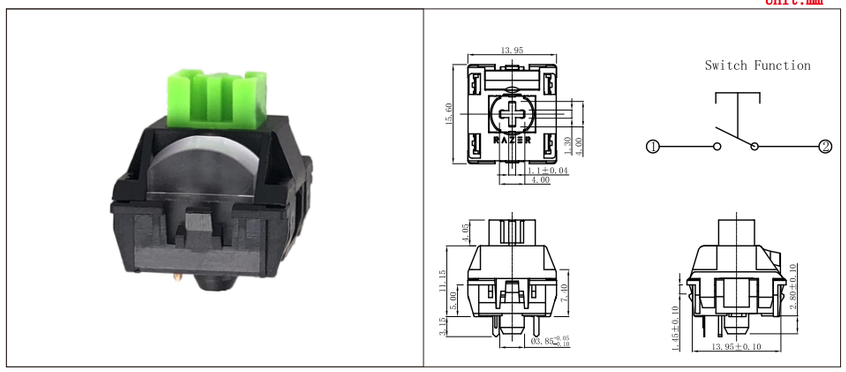

Mounting Options

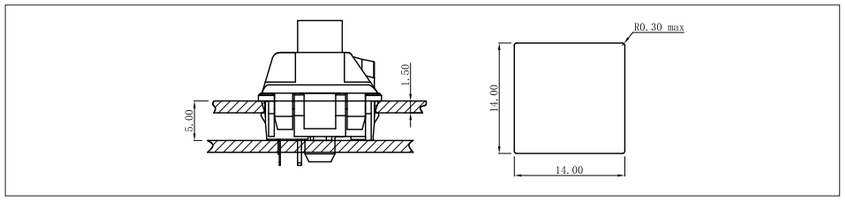

Circuit Board Layouts

◆ Keyswitch without flxation pins

Gride line spacing=1.27mm

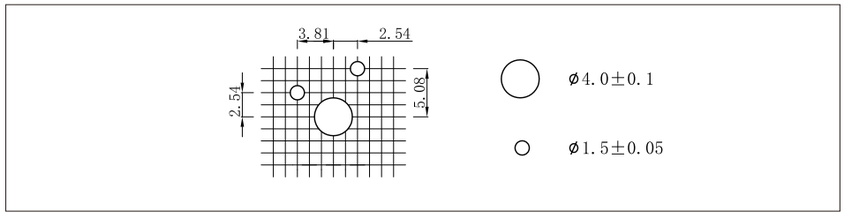

GT08-Ultrathin Mechanical Keyboard Switch-1.6mm Travel



Features

-With tactile sound or smooth mute for selection
-Feel smooth and natural, no touch key angle card lag phenomenon
-Life can reach more than 10 million times
-Can be equipped with RGB-LED lights added colorful backlight
-Patent products, the world's first

Applications

Notebook computer keyboards

Specification and Parameters

Electical Characteristics	Rating	12V DC/AC Max. 10mA AC/DC max
	Initial Contact Resistance	200mΩMax
	Insulation Resistance	100mΩMin
	Voltage Resistance	AC 100V(50-60Hz)1 Minute
	Electrical Life	Over20, 000, 000 cycles(Load)
	Bounce Time	(operation speed at<400mm/sec)
Parameters	Tactile Force(TF)	70±15gf
	Tactile Position(TP)	0.65±0.2mm
	Operating Position(OP)	(TP±0.05) ≤OP≤1.2mm
	Total Travel(TT)	1.6±0.3mm
	Return Force(RF)	RF=20gf Min
	Mechanical Life	Over 10,000,000 Cicles(NO Load)
	Operating Temperature Range	-40° C~+80° C
	Ambient Humidity	≤85%RH
	Hand soldering Condition	3Sec Max. 360° C±10° C

Travel-force curve

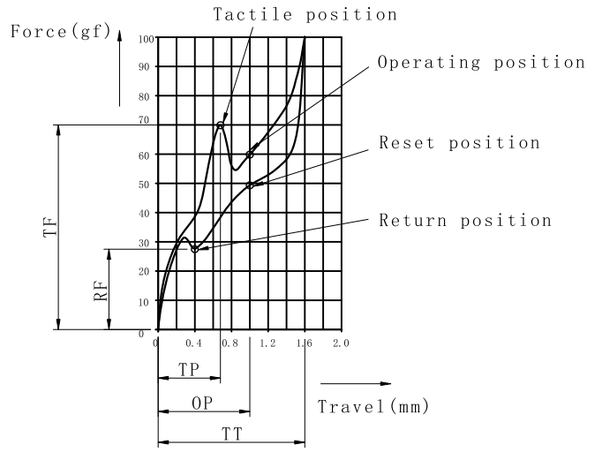

GT08 Series Keyswitch Ordering Instruction

GT08	A		1		C		N		P		A1	
GUANTAI Switch Type	Keyswitch Height		Code of Operating Force		Operating Characterstics and Key Stem Style		LED Diode		Mounting Options		Special requirements travel	
	A	4.9mm	1	OF=70±15gf	A	single pole, standard type, black key stem	N	No LED, No Diode	P	With pins	A1	The switch on stroke is less than 0.95mm
	B	Other	2	Other	C	single pole, tactile feel, sound, white translucent key stem			S	Suitable	A2	Other to be defined

■Dimensions

Unit:mm

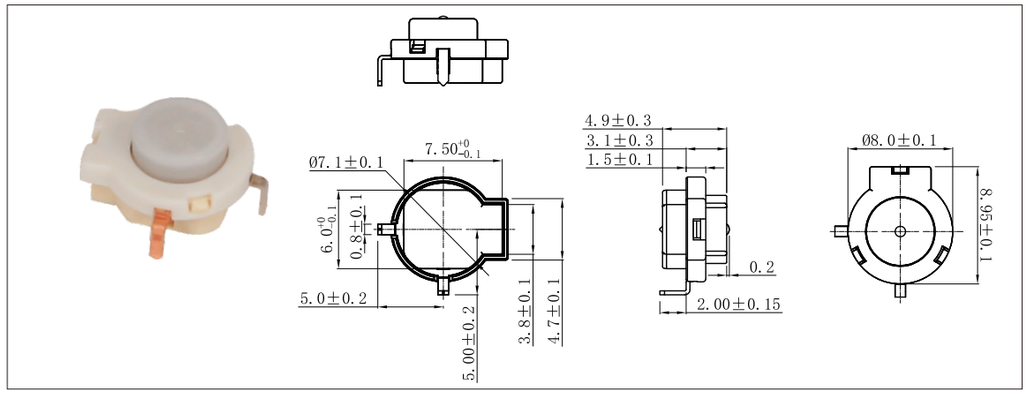

■Circuit Board Layouts

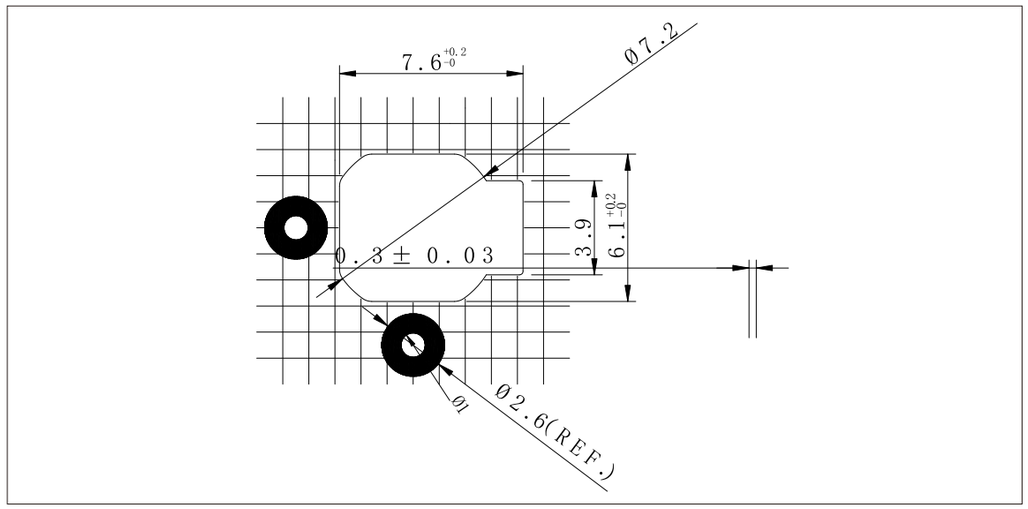

GT11-Ultrathin Mechanical Keyboard Switch-2.5mm Travel



■Features

-With tactile sound or smooth mute for selection
-Feel smooth and natural, no touch key angle card lag phenomenon
-Life can reach more than 10 million times
-Can be equipped with RGB-LED lights added colorful backlight
-Patent products, the world's first

■ Applications

◆ Notebook computer keyboards

■ Specification and Parameters

Electical Characteristics	Rating	12V DC/AC max.10mA AC/DC max
	Initial Contact Resistance	200m Ω Max
	Insulationg Resistance	100M Ω Min
	Voltage Resistance	AC 100V (50-60Hz) 1 Minute
	Electrical Life	Over 10,000,000 cycles(Load)
	Bounce Time	400mm/s 5msec (operation speed at 400mm/sec)
Parameters	Tactile Force(TF)	70 ±15gf
	Tactile Position(TP)	1.0±0.3
	Operating Position(OP)	(TP+0.1)≤OP≤1.6mm
	Total Travel(TT)	2.5±0.2mm(GT11A) 2.5+0/-0.3 mm(GT11B)
	Return Force(RF)	RF=20gf Min
	Mechanical Life	2000 Over 20,000,000 Cicles(NoLoad)
	Operating Temperature Range	- 40℃~ +80℃
	Ambient Humidity	≤85%RH
	Hand soldering Condition	3Sec Max.at 360℃±10℃

■Travel-force curve

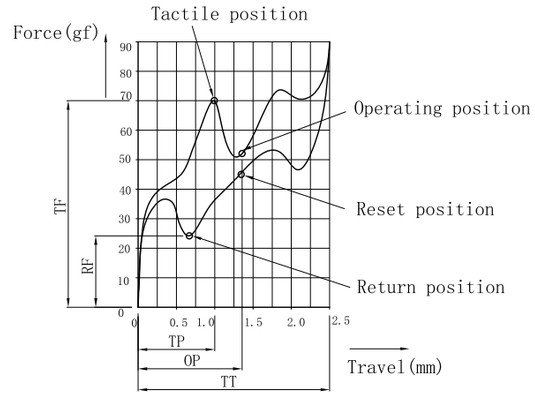

Travel-force curve