G91 Series

Dustproof Mini Micro Switch



■Features

-Small Compact Size
-Long Life,High Reliability
-Variety of Terminals and Levers
-Widely Used in Auto,Appliance
and Other Industry Control

■Application

◆Auto
◆Push Rod
◆Tubular Motor
◆Air-Conditioner
◆Alarm
◆Mixer&Meat Grinder
◆Fax Machine
◆Money Sorter
◆Toy Car

■Parameters:

Rating	P1	ENEC/UL:0.1A 125/250V 48VDC Gold Plated Contact Optional
	05	ENEC:5A 125/250VAC;5A 1/8HP,125/250VAC
	10	ENEC:10(1.5A) 125/250VAC;UL:10A 1/4HP 125/250VAC
Operating Frequency	Electrical	10~30 cycles/minute
	Mechanical	120 cycles/minute
Contact Resistance(Intiative)		100mΩ Max
Insulation Resistance(at 500VDC)		100mΩ Min
Dielectric Strength		1,000VAC RMS(50~60Hz)
Operating Temperature		-40°C~+125°C or-40°C~+85°C
Storage Humidity		85%RH Max
Service Life	Electrical	10,000~100,000 cycles(Depend on part NO.)
	Mechanical	1,000,000 cycles

G91 Series Micro Switch Ordering Instruction

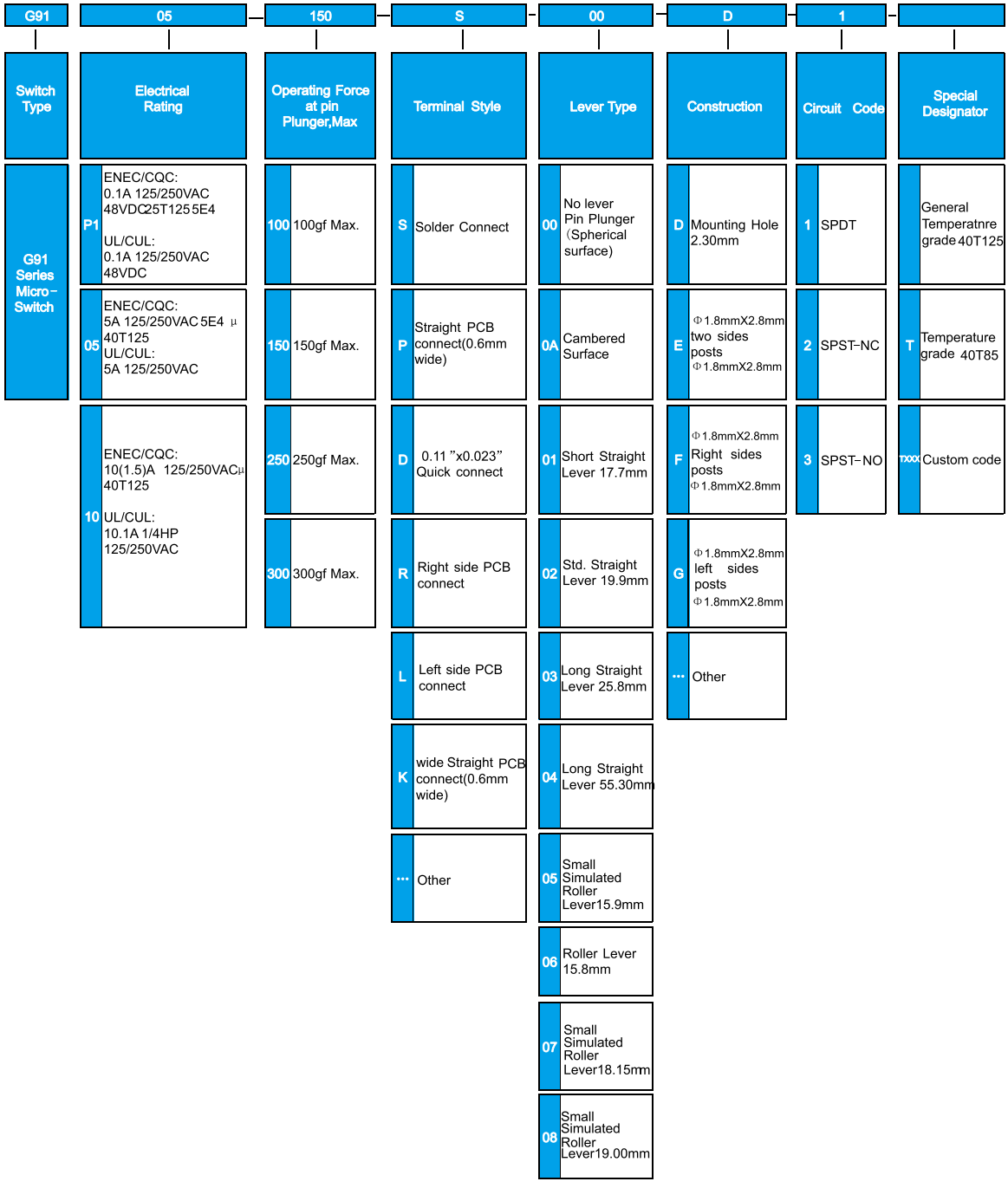

■Terminal type for G91

(单位/Unit:mm)

S#: Solder Terminals

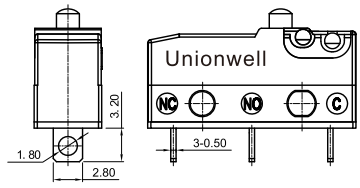

P#: Straight PCB Terminals(0.6mm wide)

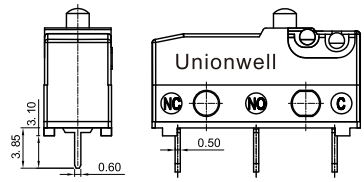

D#: 110# Quick Connect Terminals

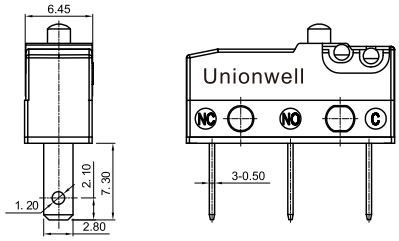

R#: Right Angled PCB Terminals

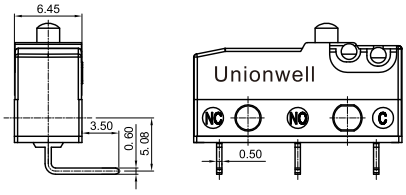

L#: Left Angled PCB Terminals

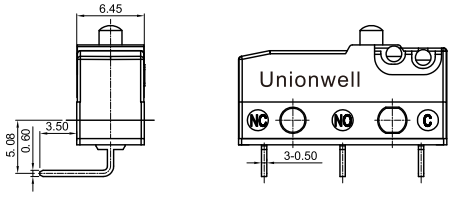

K#: Straight PCB PCB Terminals(1.3mm Wide)

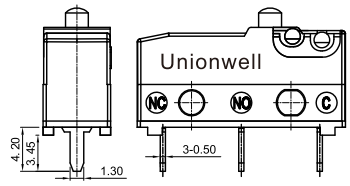

■Mounting Hole and Operating Characteristics

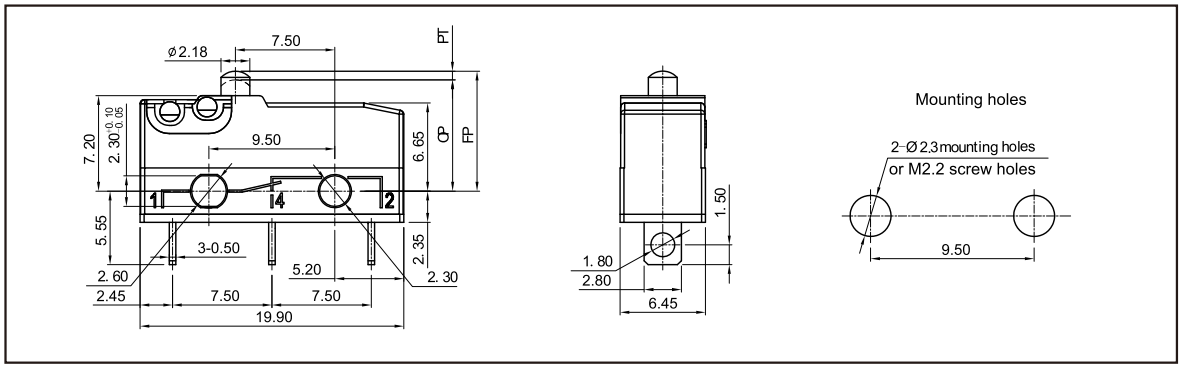

■Dimensions and Operating Characteristics

◆ Pin Plunger



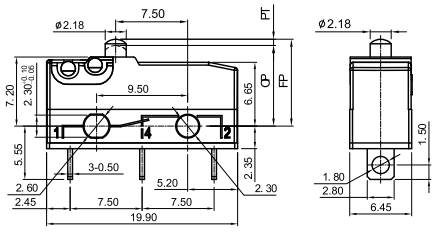

Part NO.	Parameters							
	OF Max.		RF Min.		PT Max.	OT Min.	MD Max.	OP
	(N)	(gf)	(N)	(gf)	(mm)	(mm)	(mm)	(mm)
G91□□-100□00D1	1.00	100	0.10	10	1.1	0.6	0.2	8.4±0.3
G91□□-150□00D1	1.50	150	0.35	35	1.1	0.6	0.2	8.4±0.3
G91□□-250□00D1	2.50	250	0.40	40	1.1	0.6	0.2	8.4±0.3
G91□□-300□00D1	3.00	300	0.60	60	1.1	0.6	0.2	8.4±0.3

■Dimensions and Operating Characteristics

◆ Short Straight Lever



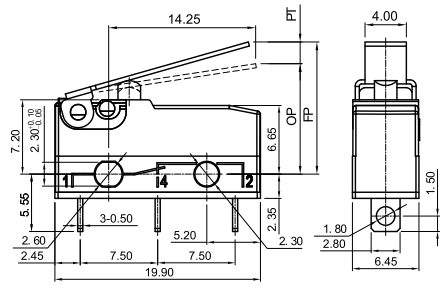

Part NO.	Parameters							
	OF Max.		RF Min.		PT Max. (mm)	OT Min. (mm)	MD Max. (mm)	OP (mm)
	(N)	(gf)	(N)	(gf)				
G91□□-100□01D1	0.45	45	0.03	3	4.3	1.2	0.8	10.7±0.3
G91□□-150□01D1	0.60	60	0.08	8	4.3	1.2	0.8	10.7±0.3
G91□□-250□01D1	0.85	85	0.10	10	4.3	1.2	0.8	10.7±0.3
G91□□-300□01D1	1.20	120	0.15	15	4.3	1.2	0.8	10.7±0.3

◆ Std.Straight Lever



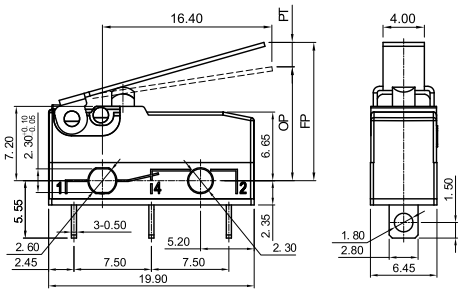

Part NO.	Parameters							
	OF Max.		RF Min.		PT Max. (mm)	OT Min. (mm)	MD Max. (mm)	OP (mm)
	(N)	(gf)	(N)	(gf)				
G91□□-100□02D1	0.40	40	0.02	2	4.8	1.2	1.2	11.1±1.5
G91□□-150□02D1	0.50	50	0.06	6	4.8	1.2	1.2	11.1±1.5
G91□□-250□02D1	0.75	75	0.08	8	4.8	1.2	1.2	11.1±1.5
G91□□-300□02D1	1.10	110	0.12	12	4.8	1.2	1.2	11.1±1.5

◆ Long Straight Lever



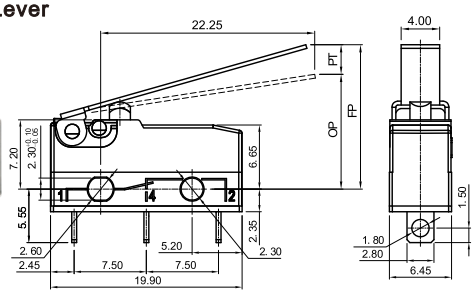

Part NO.	Parameters							
	OF Max.		RF Min.		PT Max. (mm)	OT Min. (mm)	MD Max. (mm)	OP (mm)
	(N)	(gf)	(N)	(gf)				
G91□□-100□03D1	0.35	35	0.01	1	6.3	1.5	1.5	12.0±1.8
G91□□-150□03D1	0.40	40	0.04	4	6.3	1.5	1.5	12.0±1.8
G91□□-250□03D1	0.65	65	0.06	6	6.3	1.5	1.5	12.0±1.8
G91□□-300□03D1	0.90	90	0.10	10	6.3	1.5	1.5	12.0±1.8

◆ Short Std.Simulated Roller Lever



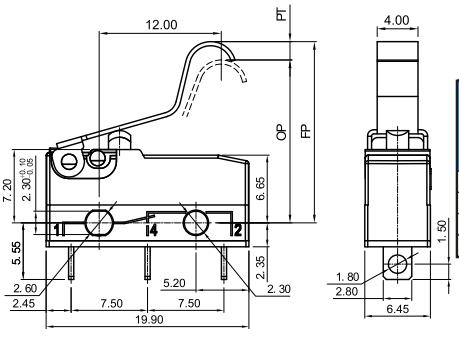

Part NO.	Parameters							
	OF Max.		RF Min.		PT Max. (mm)	OT Min. (mm)	MD Max. (mm)	OP (mm)
	(N)	(gf)	(N)	(gf)				
G91□□-100□05D1	0.50	50	0.03	3	4.3	1.0	0.7	16.0±1.3
G91□□-150□05D1	0.65	65	0.08	8	4.3	1.0	0.7	16.0±1.3
G91□□-250□05D1	0.95	95	0.12	12	4.3	1.0	0.7	16.0±1.3
G91□□-300□05D1	1.30	130	0.16	16	4.3	1.0	0.7	16.0±1.3

■Dimensions and Operating Characteristics

◆ Short Roller Lever



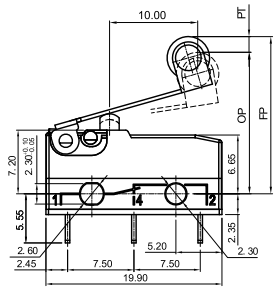

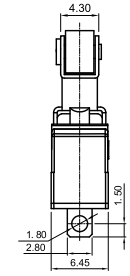

Part NO.	Parameters							
	OF Max.		RF Min.		PT Max. (mm)	OT Min. (mm)	MD Max. (mm)	OP (mm)
	(N)	(gf)	(N)	(gf)				
G91□□-100□06D1	0.50	50	0.03	3	4.3	1.0	0.7	15.8±1.3
G91□□-150□06D1	0.65	65	0.08	8	4.3	1.0	0.7	15.8±1.3
G91□□-250□06D1	0.95	95	0.12	12	4.3	1.0	0.7	15.8±1.3
G91□□-300□06D1	1.30	130	0.16	16	4.3	1.0	0.7	15.8±1.3

◆ Long Std.Simulated Roller Lever



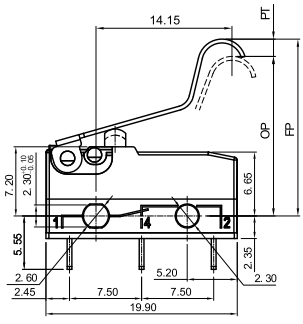

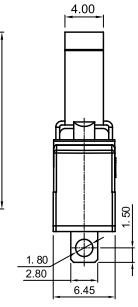

Part NO.	Parameters							
	OF Max.		RF Min.		PT Max. (mm)	OT Min. (mm)	MD Max. (mm)	OP (mm)
	(N)	(gf)	(N)	(gf)				
G91□□-100□07D1	0.45	45	0.03	3	4.8	1.3	1.0	16.4±1.5
G91□□-150□07D1	0.60	60	0.08	8	4.8	1.3	1.0	16.4±1.5
G91□□-250□07D1	0.85	85	0.11	11	4.8	1.3	1.0	16.4±1.5
G91□□-300□07D1	1.20	120	0.15	15	4.8	1.3	1.0	16.4±1.5