

G303A/B Series

Mini Sealed Micro Switch

■Features

-Designed for water and dust tight(IP67)
-Small Copact Size
-Global safety approvaled,customer designs
-Long range and high reliability
-Wide range of wiring terminals
-Variety of levers
-Widely used in automotive electronics
appliance and industrial control
-Variety of shapes

■Application

◆Car
◆Air-Conditioner
◆Communication
◆Electric tool brush
◆Toys
◆Bicycle

■Parameters

Rating		0.1A/125VAC;3A/12VDC;0.1A/250VAC;0.1A/48VDC μ1E5.
Operating Frequency	Electrical	0.1A-120cycles/minute; 3A-10~30cycles/minute
	Mechanical	120cycles/minute
Contact Resistance(Initiative)		100mΩ Max
Insulation Resistance(at 500VDC)		100mΩ Min
Vibration durability		10~55Hz,move 0.75mm(p-p)
Dielectric Strength		500VAC(50~60Hz)
Storage Temperature		-40 °C~+85°C
Storage Humidity		85%RHMax
Service Life	Electrical	100,000 cycles
	Mechanical	Min.500,000 cycles

■Switch IP rated

G303A IP67



G303B IP40



G303A/B Series Micro Switch Ordering Instruction

G3	03	A	180	K	00	A	20	A	–	E	A	280	TXXX
Switch Type	Electrical Rating	Switch Protection Level	Operating Force at pin plunger,Max	Terminal Style	Lever Type	Circuit Code	Shape and Posts	Posts Dimension		AWG Type (for Wire type only)	AWG Number (for Wire type only)	Wires length	Custom code
G3 Series Micro-Switch	03 0.1A125/250VAC 48VDC;3A12VDC μ1E5	A IP67	180 180gf Max	E Molded lead wires downwards	00 No lever Pin Plunger	A SPST	20 Waterproof two sides posts	A No Post		No molded lead wires	No molded lead wires	300mm length standard lead wires	General
		B IP40	130 130gf Max	G Molded lead wires on left side (plunger side)	03 03#straight lever	B SPST-NC	21 C2 type no post	B φ2.95×5. 0mm posts		E 20# (Only for the bottom Outlet switch)	A UL1007	280 280mm length	TXXX Custom code
				F Molded lead wires on right side (plunger side)	38 38#lever	C SPST-NO	22 C2 type Left posts	C φ2.95mm×1. 5mm posts		F 22#	F AVSS	··· Other	··· Other
				K Long solder terminals	··· Other		23 C2 type right posts	-- Other		G 24#	L FLRY-A		
				I Big Solder terminals			24 dustproof no post			-- Other	-- Other		
				P Straight PCB terminals (0.9mm width)			25 D2 type left side posts						
				R Right side PCB terminals			26 D2 type right side posts						
				L Left side PCB terminals			27 D2 type two side posts						
				J Long straight PCB terminals			-- Other						
				C 2#long solder terminals									
				D 2#straight PCB terminals (0.6mm width)									
				S Solder terminals									
				-- Other									

Terminal Style

E#: Wires leads to bottom	I#: Solder Terminals	G#: Wires leads to plunger side
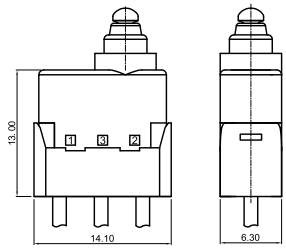	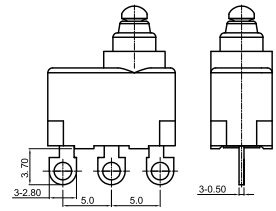	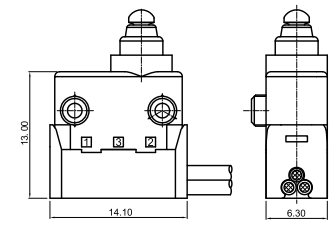
P#: Straight PCB Terminals	**K#: Long Solder Terminals**	**F#: Wires leads to opposite to plunger side**
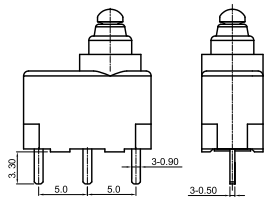	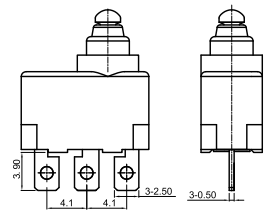	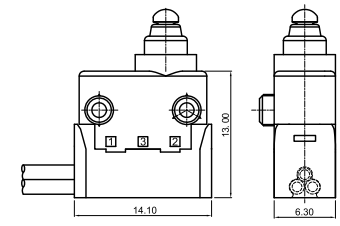
J#: Left and right straight PCB terminals	**C#: 2 # Long Solder terminals**	**D#: Straight PCB Terminals**
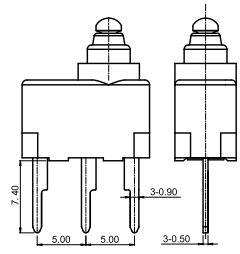	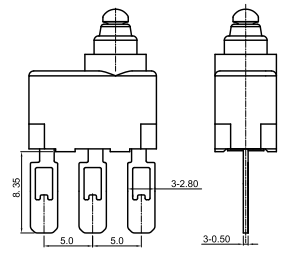	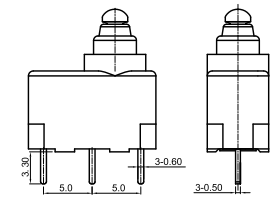

Lever Type

03#: lever	38#: lever
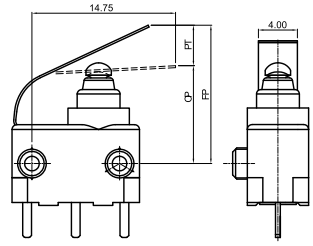	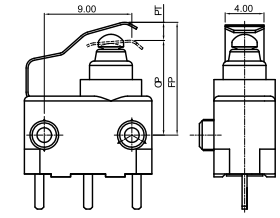

Posts Dimension

A#: No post

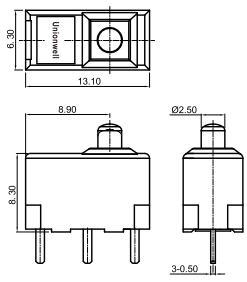

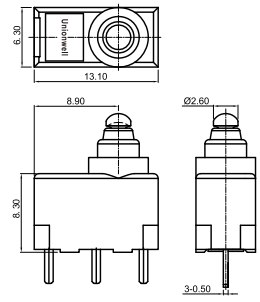

B#: ϕ2.95X5.0mm posts

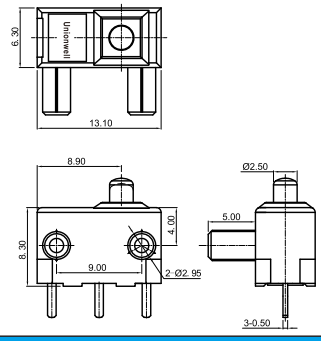

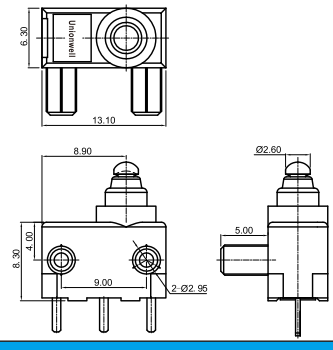

C#: ϕ2.95X1.5mm Posts

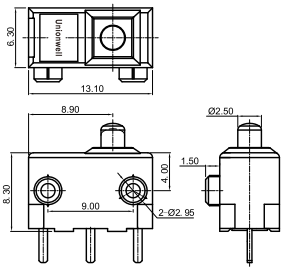

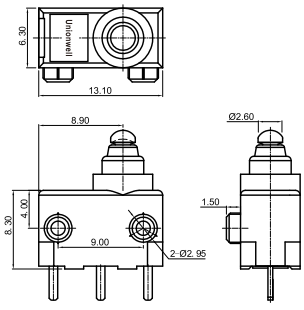

Circuit Configuration

A#:SPDT	B#:SPST-NC	C#:SPST-NO
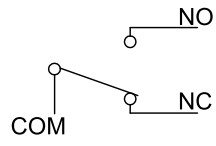	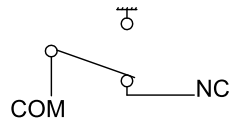	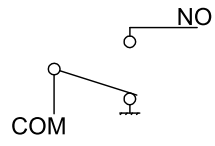

Mounting Hole and Operating Characteristics

G303A/G303A Series	G303B/G303B Series
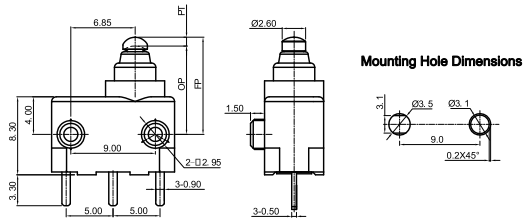	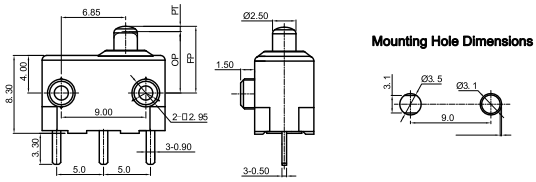

Posts direction define

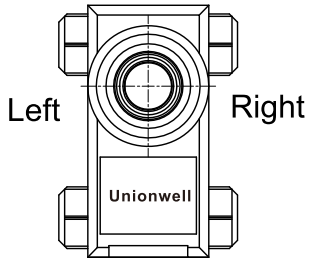

Dimensions and Operating Characteristics

◆ G303A-180P00A21A



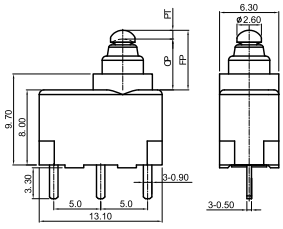

OF Max. (gf)		RF Min. (gf)	PT Max. (mm)	OT Min. (mm)	DT Max. (mm)	FP Max. (mm)	OP (mm)
-180	180	20	1.5	0.7	0.4	6.35	5.4±0.3

■ Dimensions and Operating Characteristics

◆ G303A-180P00A23C



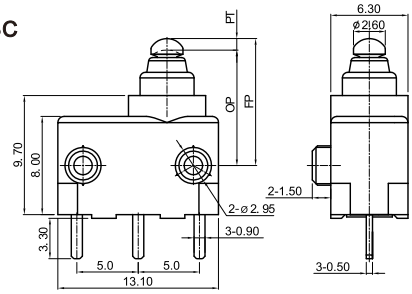

OF Max. (gf)		RF Min. (gf)	PT Max. (mm)	OT Min. (mm)	DT Max. (mm)	FP Max. (mm)	OP (mm)
-180	180	20	1.5	0.7	0.4	10.35	9.4 ± 0.3

◆ G303B-130P00A24A



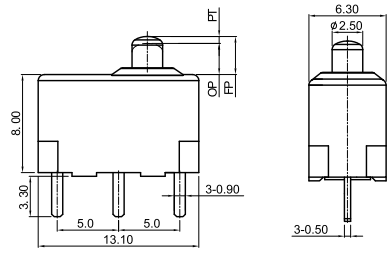

OF Max. (gf)		RF Min. (gf)	PT Max. (mm)	OT Min. (mm)	DT Max. (mm)	FP Max. (mm)	OP (mm)
-130	130	8	1.5	0.7	0.4	3.3	2.2 ± 0.3

◆ G303B-130P00A26C



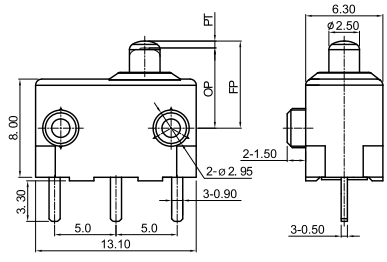

OF Max. (gf)		RF Min. (gf)	PT Max. (mm)	OT Min. (mm)	DT Max. (mm)	FP Max. (mm)	OP (mm)
-130	130	8	1.5	0.7	0.4	7.3	6.2 ± 0.3

◆ G303A-180P03A23C



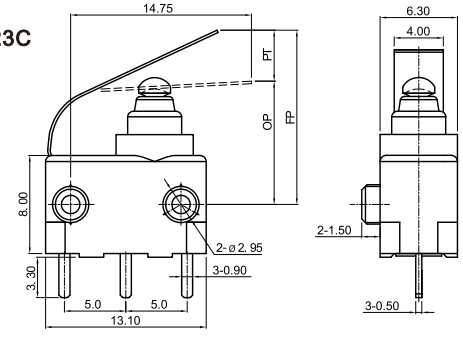

OF Max. (gf)		RF Min. (gf)	PT Max. (mm)	OT Min. (mm)	DT Max. (mm)	FP Max. (mm)	OP (mm)
-180	250	50	5.5	0.7	1.1	14	10.7±1.5

◆ G303A-180P38A23C



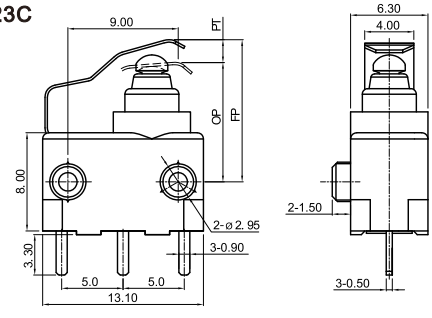

OF Max. (gf)		RF Min. (gf)	PT Max. (mm)	OT Min. (mm)	DT Max. (mm)	FP Max. (mm)	OP (mm)
-180	250	50	2	0.7	1.1	12	9.9 ± 1.2