G304F Mini Sealed Micro Switch



■ Features

-Designed For Water and Dust Tight(IP67)
-Small Compact Size
-Long Life and High Reliability
-Variety of Levers
-Wide Range of Wiring Terminals
-Widely used in Automotive Electronics,Appliance and Industrial Control etc.
-Customized Designs
-Slide Structure
-Non Short Circuit Conversion

■Application

◆Car
◆Air-Comditioner
◆Communication
◆Electric Tooth Brush
◆Toys

■Parameters

Operation Speed		1~500mm/s
Operating Frequency		120cycles /min
Insutation Resistance		≥100mΩ（DC500V）
Contact Resistance (Intial Value)	with terminals type	≤100mΩ
	with wire type	≤100mΩ（300mm length）
Voltage Resistance	Between terminals	AC500V,50/60Hz,1min.
	Between terminals and uncharged metal parts	AC1000V,50/60Hz,1min.
Vibration	No transformation action	10-55HZ
Service Life	Electrical	300000 cycles (20 cycles /min) 0.1A 12VDC 50 μA 3VDC
	Mechanical	300,000 cycles （30cycles /min）
Protection Level		IEC IP67
Storage Termperature		-40~+85°C 60%RH
Storage Humidity		95%RH（+5℃~+35℃）

G304 F-Type Series Micro Switch Ordering Instruction

G3	04	-	150	P	00	E	39		-	G	A	280	
Switch Type	Electrical Rating		Operating Force at pin Plunger, Max	Terminal Style	Lever Type	Circuit Code	Shape and Posts	Posts Dimension		AWG Type (for Wire type only)	AWG Number (For Wire type only)	Wires length	Special Designator
G3Series - Micro Switch	04 0.1A 12VDC 50 u A 3VDC		80 80gf Max.	P Straight PCB Terminals / Straight PCB connect	00 No lever Pin Plunger	D Slide Non-short circuit Type, 1,3 Convert to 1,2 SPDT	35 F type no post	Standard posts:2.60mmx5.0mm		No molded lead wires	No molded lead wires	300mm length standard lead wires 300mm	S Special code
	... Other		150 150gf Max.	K Long solder Terminals / Long solder terminals	26 V Type Straight Leaf Lever	G Slide Non-ehort circuit Type 3 Terminals, But SPST-NO	36 F type left posts	G Φ 2.6X1.5mm posts.		E 20#	A UL1007	280 280mm length	B Molded lead wires on left side
			... Other	W Straight PCB Terminals / Long Straight PCB Terminals	08 Straight Leaf Lever	B Slide Type SPST-NC	37 F type right posts	H Φ 2.6X2.0mm posts.		F 22#	C UL1430	... Other	C Molded lead wires on left side
				... Other	... Other	C Slide Type SPST-NO	38 F type two sides posts	I Φ2.2X0.8mm posts.		G 24#	D UL1061		E Molded lead wires on Bottom
						... Other	46 F type leng then two sides posts	K 7.3X1.2X1.2mm posts.		H 26#	E UL1330		... Other
							... Other	... Other		I 28#	F AVSS		
										J 30#	H UL1332		
										K 32#	G UL3132		
										L 34#	... Other		
										... Other			

■Circuit

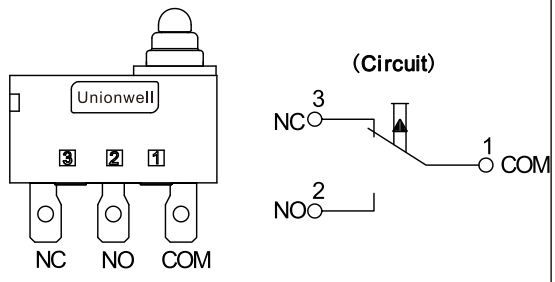

■ Posts direction define

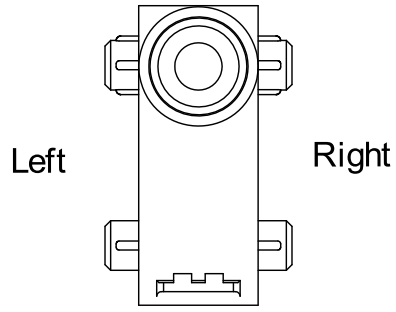

■Basic Mounting Dimensions and Operating Characteristics

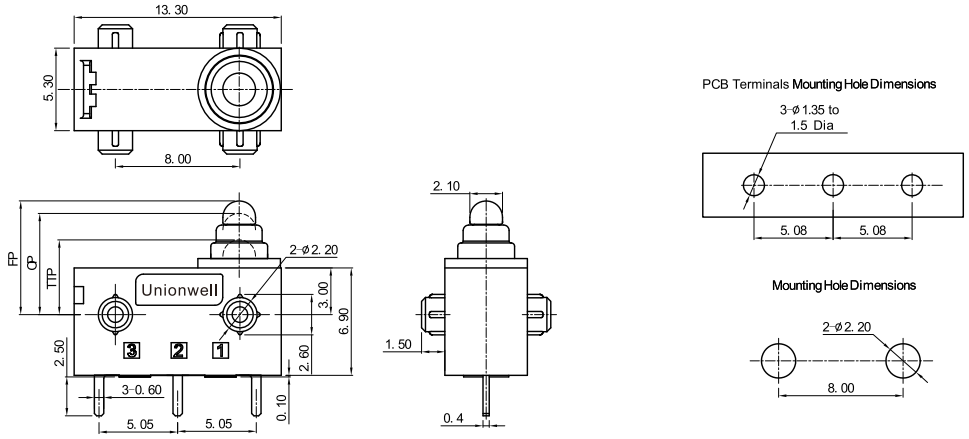

■Switch Terminals Type(Can be customized)

Straight PCB Terminals	Long Solder Terminals
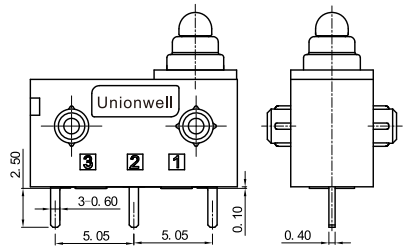	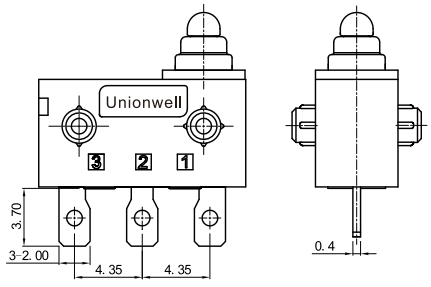

■ Switch Terminals Type(Can be customized)

Short Right side PCB Terminals

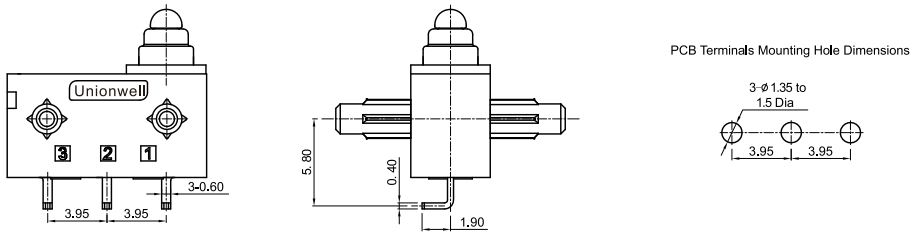

■Posts Type

F Type: ϕ2. 60mm×1. 5mm Right Posts

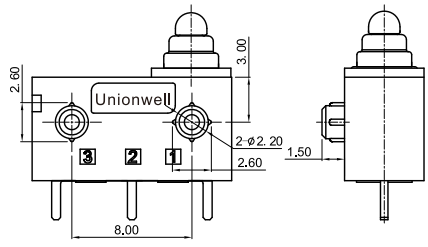

F Type: ϕ2. 60mm×1. 5mm Left Posts

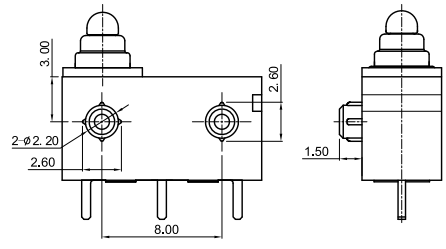

Standard Type: 2. 60mm×5.0mm Standard Posts

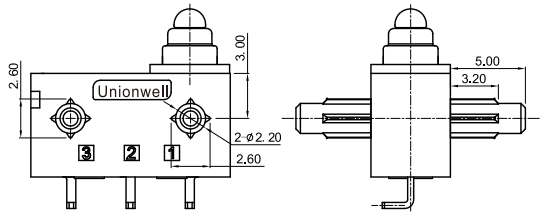

No Posts

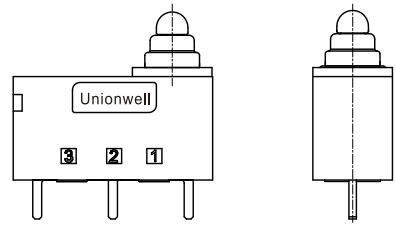

■Dimensions and Operating Characteristics

◆G304-150W26D46



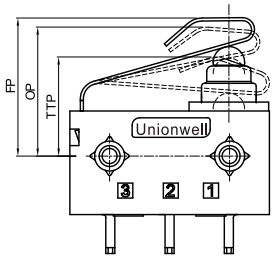

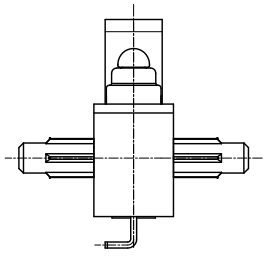

OF Max (gf)	TTP Min (mm)	FP Max (mm)	OP (mm)
300	6. 6	9. 8	8.6 (+0.5,-0.35)

◆G304-150P00D36G



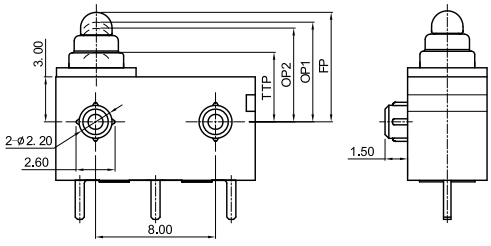

OF Max (gf)	TTP Min (mm)	FP Max (mm)	OP-NC (mm)	OP-NO (mm)
150	4. 8	7. 9	6.8±0.3	6.5±0.3