G305 Series

Subminiature Sealed Micro Switch



Features

- Designed for water and dust tight (IP67)
- Small Compact Size
- Long Life and High reliability
- Widely used in automotive electronics, appliance and industrial control

Application

- ◆Car
- ◆Air-Conditioner
- ◆Communication
- ◆Electric tooth brush
- ◆Toys
- ◆Bicycle

Parameters:

Rating		2A 24VDC 4A 12VDC μ40T85 10E4
Operating Frequency	Electrical	0.1A-120cycles/minute ; 4A-10~30cycles/minute
	Mechanical	120cycles/minute
Contact Resistance(Initiative)		100m Ω Max
Intial Value Resistance(at 500VDC)		100M Ω Min
Vibration durability		10~55Hz, move 0.75mm(p-p)
Dielectric Strength		500VAC (50~60Hz)
Storage Temperature		-40℃~+85℃
Storage Humidity		85% RH Max
Service Life	Electrical	10,000 cycles
	Mechanical	Min.500,000 cycles

Circuit

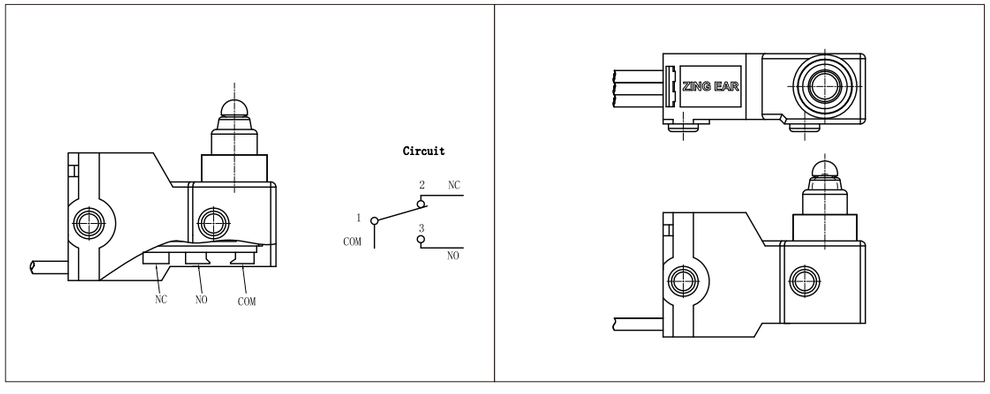

Switch Wire Type

G305 Series Micro Switch Ordering Instruction

G3	Switch Type		
05	Electrical Rating	05	2A 24VDC 4A 12VDC μ40T85 10E4
130	Operating Forceat pin Plunger, Max	130	130#Spring
F	Terminal Style	F	Molded lead wires on right side (plunger side)
00	LeverType	00	No lever Pin Plunger
		13	13#lever
		..	Other
A	Circuit Code	A	SPDT
		B	SPST-NC
		C	SPST-NO
33	Shape and Posts	33	Left side posts
		34	right side posts
D	Posts Dimension	D	Crosstype φ 4.6mmX5.0mm posts.
		E	φ2.95mmX0.75mm posts.
		..	Other
I	AWG Type(for Wire type only)	I	0.2mm²
F	AWG Number(For Wire type only)	F	AVSS
280	Wires length	300	300mm length standard cord
		280	280mm length
		..	Other
TXXX	Custom Code	TXXX	According to customer's request

■Dimensions and Operating Characteristics of Basic Shape

E:¢2.95mmX0.75mm Mounting pin size	D:¢4.6mmX5.0mm Criss-cross Mounting pin size
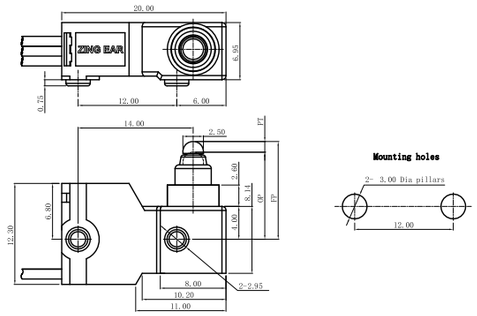	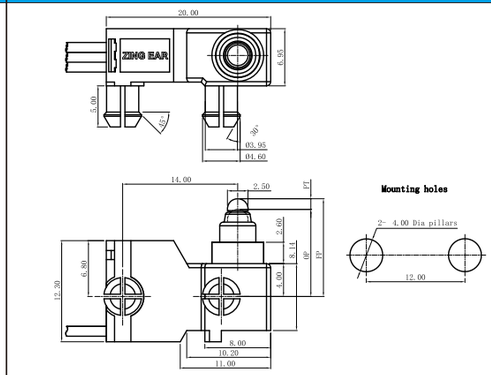

■Switch Lever and Operating Characteristics

◆G305-130F00A34D-IF



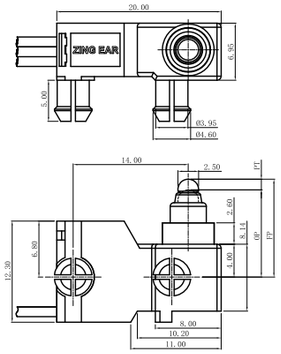

OF Max (gf)	RF Min (gf)	PT Max (mm)	OT Min (mm)	DT Max (mm)	FP Max (mm)	OP (mm)
-130	200	25	1.5	0.7	0.6	12.1	10.60±0.4

◆G305-130F13A34D-IF



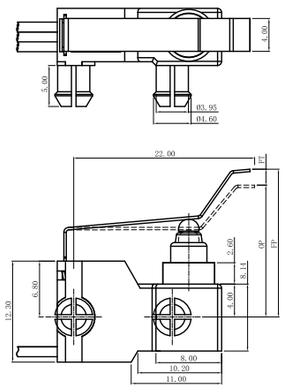

OF Max (gf)	RF Min (gf)	PT Max (mm)	OT Min (mm)	DT Max (mm)	FP Max (mm)	OP (mm)
-130	250	25	3.3	1.2	1.1	21	16.0±0.8

G306 Subminiature Micro Switch

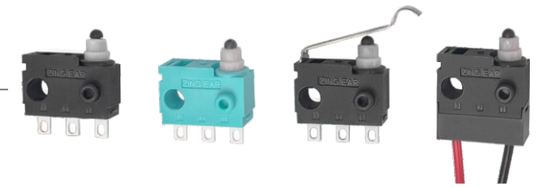

■ Features

-High reliability and good resistance to environment, sealed micro switch with long travel
-With long travel, can work excently even without lever
-High reliability sliding contact structure
-With high temperature resistance (+85 ° C) and drip-proof structure, can be widely applied in different environments, IP67 rated (except for terminals)
-Widely applied for home appliances, electronic equipments, automatic equipments, communication equipments, auto electronics, apparatus and instruments, electrical tools etc.

■ Application

-Home Appliance
-Electronic Equipments
-Automatic Equipments
-Communication Equipments
-Auto Electronics
-Apparatus and Instruments

■ Parameters:

Operating Speed		1~500mm/s
Operating Frequency		120cycle/min
Insulation Resistance		≥100MΩ (DC 500V insulating-resistance meter)
Contact Resistance (Initial Value)	With terminals type	≤100mΩ
	With wire type	≤500mΩ (300 mm wire length)
Voltage Resistance	Between terminals	AC500V, 50/60HZ, 1min
	Between terminals and uncharged metal parts	AC1000V, 50/60HZ, 1min
Vibration Resistance	No transformation action	10-55HZ Double amplitude 1.5mm
Service Life	Electrical	300000 cycles (20 min) DC30V 0.1A DC14V 10mA
	Mechanical	300,000 cycles (30 cycle/min)
Protection Level		IEC IP67 (Except the terminal part)
Storage Temperature		-40～+85 °C 60%RH under (With no icing or condensation)
Storage Humidity		95%RH under (+5～+35 °C)