GT11 Series Keyswitch Ordering Instruction

GT08	A		1		C		N		P	
GUANTAI Switch Type	Keyswitch Height		Code of Operating Force		Operating Characterstics and Key Stem Style			LED Diode	Mounting Options	
	A	6.7mm	1	OF=70±15gf	A	single pole, standard type, black key stem	N	No LED, No Diode	P	With pins
	B	6.4mm	2	Others	C	single pole, tactile feel, sound, white translucent key stem			S	Suitable
	C	Others								

■ Dimensions

Unit:mm



H=6.7mm(DIP)

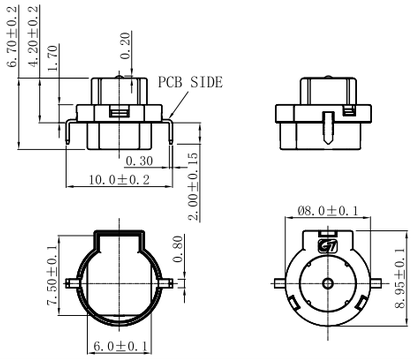



H=6.4mm(DIP)

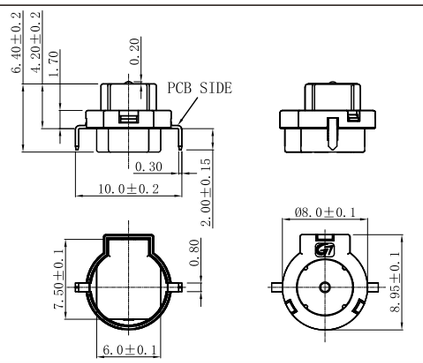

■ Circuit Board Layouts

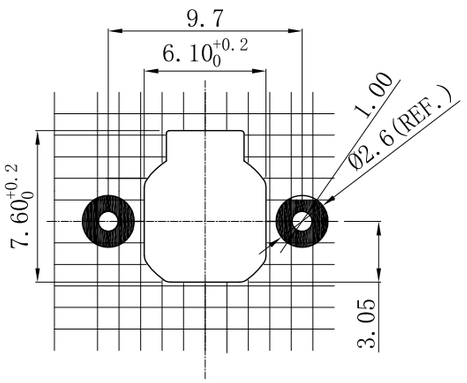

G1/G17 Series

Series-Active Sealed Tact Switch

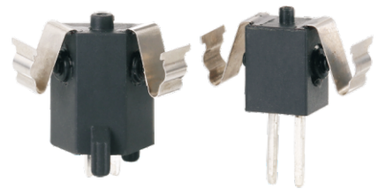

■Features

-Water and Dust Proof(IP67)Design
-Long life/High Reliability
-0.8*0.8PCB terminal
-Operate the two levers at the same time for safety operation
-Variety of levers and control methods
-Mini size,could be used for tight space

■Application

◆Auto
◆Industry control

■Parameters

Rating		12VDC 20 μ A~20mA
Operating Frequency	Electrical	20 cycles/minute
	Mechanical	G1 Series:120 cycles/minute
		G17 Series:80 cycles/minute
Contact Resistance(Initial Value)		<200m Ω
Insulation Resistance(at 500VDC)		>10mΩ
Vibration durability		10～55Hz, Amplitude 1.5mm
Voltage Resistance	Between Terminals	500VAC(50～60Hz)
	Between terminals and housing	1500VAC(50～60Hz)
Service Life	Electrical	100,000 cycles
	Mechanical	100,000 cycles
Storage Temperature		-40° C～+85° C
Storage Humidity		85%RH MAX
Unit Weight		G1:0.85g
		G17:1.1g

■Shape

G1 Shape	G17 Shape
	

■Circuit Configuration

G1/G17
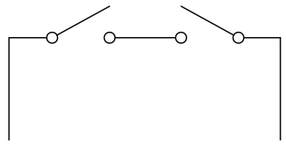

■G1 Dimension

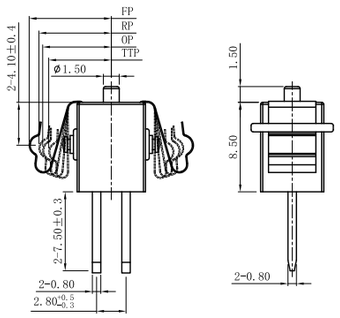

■Parameters

Part Number	OF (gf) Max	FP (mm) Max	RP (mm) Max	OP (mm)	TTP (mm) Min
G1P3-250P01C	350.00	8.85	7.30	6.5±0.5	5.30

■G17 Dimension

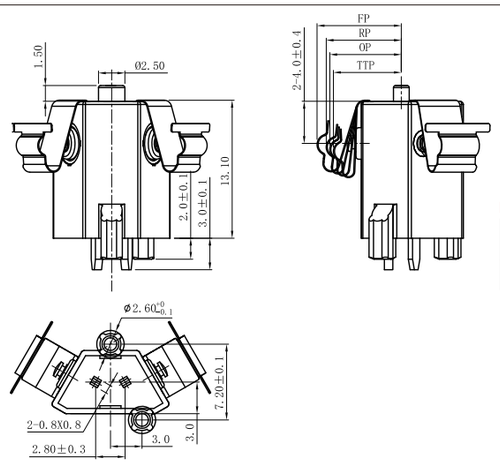

■Parameters

Part Number	OF (gf) Max	FP (mm) Max	RP (mm) Max	OP (mm)	TTP (mm) Min
G17P3-350P01C	350.00	9.40	7.80	7.05±0.5	5.90

G2 Series

Rotary Switch



■Features

-Designed for water and dust tight(IP64)
-Small Compact Size
-Long life/High Reliability
-Widely used in automotive electronics
-Appliance and industrial control

■Application

◆Car
◆Home Appliance

■Parameters

Rating		0.1A 12VDC
Operating Frequency	Electrical	10～30 cycles/minute
	Mechanical	120 cycles/minute
Contact Resistance(Initial Value)		100mΩMax.
Insulation Resistance(at 500VDC)		100MΩMin.
Vibration Durability		10～55Hz, move 0.75mm (p-p)
Dielectric Strength		500VAC(50～60Hz)
Storage Temperature		-30° C～+85° C
Storage Humidity		85%RH MAX.
Service Life	Electrical	100,000 cycles
	Mechanical	100,000 cycles Min.