■Shape

G1 Shape	G17 Shape
	

■Circuit Configuration

G1/G17
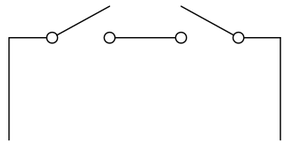

■G1 Dimension

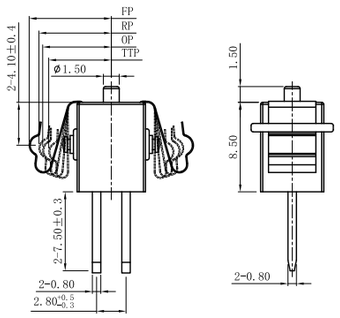

■Parameters

Part Number	OF (gf) Max	FP (mm) Max	RP (mm) Max	OP (mm)	TTP (mm) Min
G1P3-250P01C	350.00	8.85	7.30	6.5±0.5	5.30

■G17 Dimension

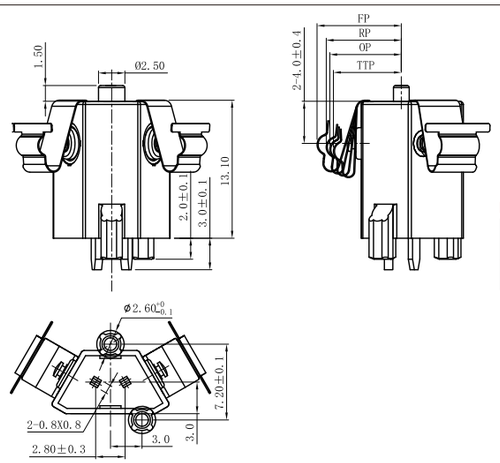

■Parameters

Part Number	OF (gf) Max	FP (mm) Max	RP (mm) Max	OP (mm)	TTP (mm) Min
G17P3-350P01C	350.00	9.40	7.80	7.05±0.5	5.90

G2 Series

Rotary Switch



■Features

-Designed for water and dust tight(IP64)
-Small Compact Size
-Long life/High Reliability
-Widely used in automotive electronics
-Appliance and industrial control

■Application

◆Car
◆Home Appliance

■Parameters

Rating		0.1A 12VDC
Operating Frequency	Electrical	10～30 cycles/minute
	Mechanical	120 cycles/minute
Contact Resistance(Initial Value)		100mΩMax.
Insulation Resistance(at 500VDC)		100MΩMin.
Vibration Durability		10～55Hz, move 0.75mm (p-p)
Dielectric Strength		500VAC(50～60Hz)
Storage Temperature		-30° C～+85° C
Storage Humidity		85%RH MAX.
Service Life	Electrical	100,000 cycles
	Mechanical	100,000 cycles Min.

G2 Series Rotary Switch Ordering Instruction

G2	Switch Type	G2 Series Rotary Switch							
01	Electrical Rating	01 0.1A 12VDC	... Other						
E	Terminal Type	E Wire Leads to Bottom	S No-hole Solder Terminals	... Other					
00	Lever Type	01 01#Lever	... Other						
A	Circuit Code	A circuit 1-COM circuit 2-COM	B circuit 1-COM	C circuit 2-COM					
1	Posts	1 Standard post	... Other						
G	AWG Type (for wire type only)	No lead wires	E 20#	F 22#	G 24#	H 26#	I 28#	... Other	
F	AWG Number (for wire type only)	No lead wires	A UL1007	C UL1430	D UL1061	F AVSS	H UL1332	... Other	
400	Wire Length	300mm length standard leadwires	Wire length 400mm 400	... Other					
TXXX	Special Designator	Special Code	...						

■Mounting Hole Dimensions

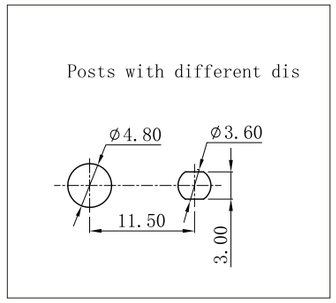

■Lever Type

01#:Leaf lever

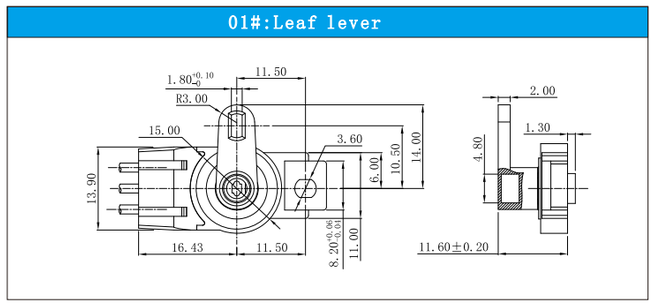

■Circuit Configuration

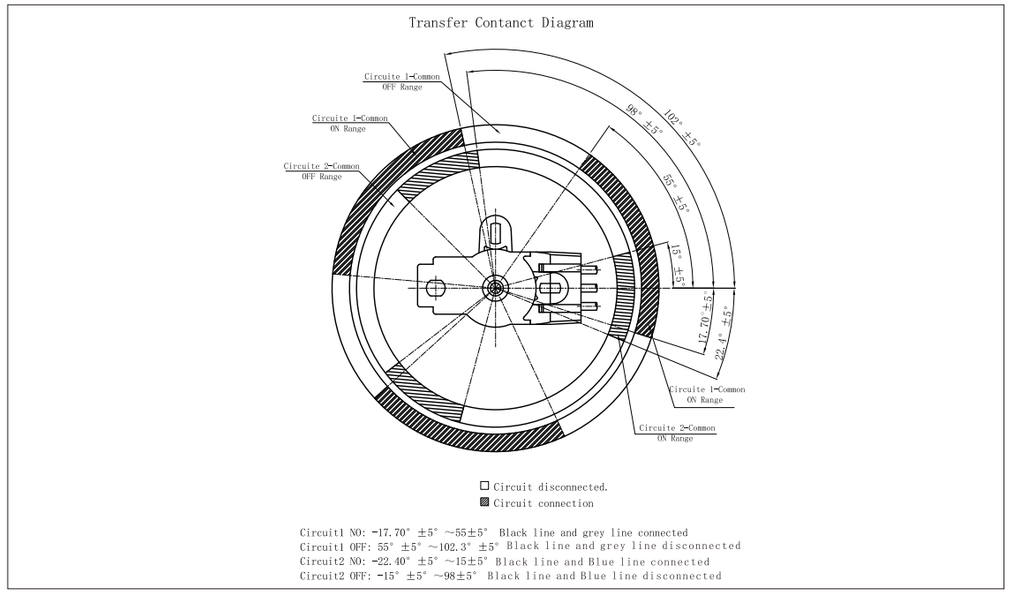

Circuit1 NO: -17.70° ±5° ~55±5° Black line and grey line connected
Circuit1 OFF: 55° ±5° ~102.3° ±5° Black line and grey line disconnected
Circuit2 NO: -22.40° ±5° ~15±5° Black line and Blue line connected
Circuit2 OFF: -15° ±5° ~98±5° Black line and Blue line disconnected

■Shape

G201-S01A1

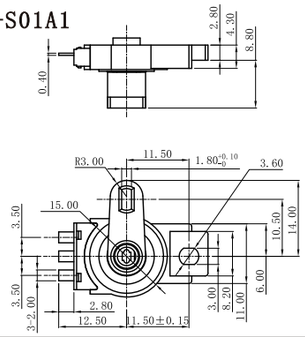

G201-E01A1-□□

