SN-IPV8050EEAR-Z

5MP IR Dome Network Camera



Key Features

- 1/2.8” progressive scan CMOS
- Max. 5MP(2592×1944) @25/30fps resolution
- 2.7~13.5mm motorized lens
- H.264, H.265, MJPEG with smart codec
- 120dB WDR, 3D DNR, ROI, HLC, BLC, Defog
- True Day/Night, Mechanic ICR filter
- Support face, human, vehicle detection
- Intelligent detection: Perimeter, Single virtual fence, Double virtual fences, Loiter, Converse, People counting
- 1/1 audio in/out, 1/1 alarm in/out
- Smart IR up to 40m
- Smart IR up to 40m

Specification

Camera	
Image Sensor	1/2.8” Progressive Scan CMOS
Electronic Shutter	Auto/Manual, 1/5 ~ 1/20,000s
Min. illumination	Color: 0.1 Lux @ (F1.4, 30 IRE) B/W: 0.03 Lux @ (F1.4, 30 IRE) B/W: 0 Lux @ (IR LED ON)
S/N Ratio	55dB
Day/Night	Auto(ICR)/Day/Night/Time
Wide Dynamic Range	True 120dB WDR
IR Range	Up to 40 m (131.2 ft)
IR On/Off Control	Auto/Manual
Pan/Tilt/Rotation Range	Pan: 0˚ ~ 360˚, Tilt: 0˚ ~ 90˚, Rotation: 0˚ ~ 360˚
Lens	
Lens Type	Motorized auto focus
Iris	Fixed Iris
Focal Length	2.7 ~ 13.5 mm
F Number	F1.4
Angle of View	H: 89°~26°, V: 64.8°~19.9°
Video	
Max. Resolution	5MP (2592×1944)
Streaming Capability	3 Streams
Stream/Frame Rate	Stream1: 2592×1520, 2560×1440, 2304×1296, 1920×1080, 1280×720 @ 25/30fps Stream2: D1, VGA, 640×360, CIF, QVGA @ 25/30fps Stream3: VGA, CIF, QVGA @ 25/30fps
Bit Rate Control	CBR/VBR
Bit Rate	Stream1: 200kbps~12Mbps Stream2: 100kbps~6Mbps Stream3: 100kbps~3Mbps
Image Enhancement	HLC/BLC/AGC/AWB/Flip&Mirror/Anti-shake/Defog
White Balance	Auto
Gain Control	Auto/Manual
Noise Reduction	2D/3D DNR
Corridor Mode	Support
Smart IR	Support
Flip/Mirror	Support
Region of Interest	Off/On (8 Zone, Rectangle)
Motion Detection	Support
Privacy Masking	Support (8 Zone, Rectangle)

Smart Function	
Smart Function	Support face, human, vehicle detection, corridor mode
Intelligent Detection	Perimeter, Single virtual fence, Double virtual fences, Loiter, Converse (the five functions support the accurate detection of vehicle and human), People counting
Audio	
Compression	G.711, RAW_PCM
Bit Rate	8kbps, 16kps, 64kbps
Network	
Protocols	IPv4/IPv6, 802.1x, HTTP, HTTPS, TCP/IP, UDP/IP, RTSP, DHCP, NTP, RTCP/RTP, PPPoE, SMTP, DNS, DDNS, UPnP, FTP, ARP, SNMP, TLS/SSL
Interoperability	ONVIF Profile S-G, SDK, CGI
Streaming Method	Unicast , Multicast
Max. User Access	10 Users @ Unicast mode Unlimited Users @ Multicast mode
Web Viewer	<IE11, Chrome, Firefox, Microsoft Edge
Management Software	SunView
Upgrade Method	Via HTTP, HTTPS, TELNET, FTP, SSH
Interface	
Network Interface	1 Ethernet (10/100 Base-T) RJ-45 Connector
Audio Interface	1ch Input, 1ch Output
Alarm Interface	1ch Input, 1ch Output
Reset Button	Support
Built-in Micro SD Slot	Yes, up to 256GB
Electrical	
Power Supply	DC12V/POE (IEEE 802.3af)
Power Consumption	Max 8.5 W
Operating Temperature	-40°C ~ 55°C (-40°F ~ 131°F)
Operating Humidity	Less than 90% RH
Ingress Protection	IIP67,IK10
Certifications	UL/CE/FCC
Casing	Metal
Dimensions	ϕ130 × 112mm (φ5.12" × 4.41")
Net Weight	0.8 kg (1.76 lb)

Dimensions (mm)

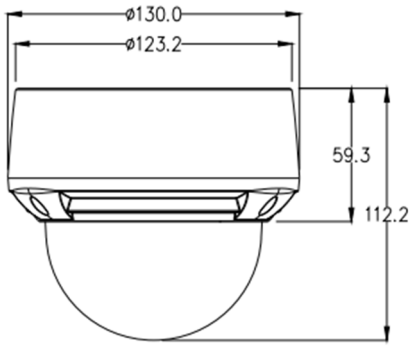

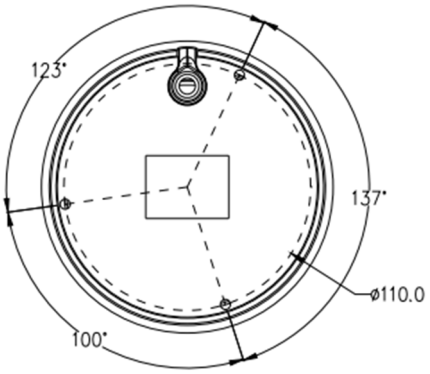

Accessories

Optional：



SN-CBK657
Junction Box



SN-CBK201
Pendant Cap



SN-CBK402
Pendant Mount



SN-CBK501
Wall Mount



SN-CBK502
Wall Mount



SN-CBK101
Pole Mount

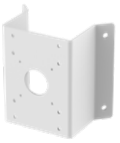

SN-CBK102
Corner Mount

©2022 Sunell all rights reserved. Design and specifications are subject to change without notice.